ABB BALDOR RELIANCE

Customer information packet

CDP3445

1HP, 1750RPM, DC, 56C, 3435P, TEFC, F1, N
Class - None
Division -

Copyright © All product information within this document is subject to ABB Motors and Mechanical Inc. copyright © protection, unless otherwise noted.
11/29/2026 7:37:14 AM

Specifications

Armature Voltage	90 V
Base Speed	1750 rpm
Enclosure	TEFC
Frame	56C
Frame Material	Steel
Haz Area Class and Group	None
Output Power	1.000 HP
Agency Approvals	CE
	CSA
	UR
Ambient Temperature	40 °C
Armature Current	10.0 a
Armature Inertia	13.657 lb-ft2
Base Indicator	Rigid
Bearing Grease Type	Polyrex EM (-20F +300F)
Drip Cover	No Drip Cover
Duty Rating	CONT
Feedback Device	NO FEEDBACK
Heater Indicator	No Heater
Lifting Lugs	No Lifting Lugs
Motor Lead Exit	Ko Box
Motor Lead Quantity/Wire Size	2 @ 14 AWG, A
Motor Lead Termination	Flying Leads
Motor Standards	NEMA
Mounting Arrangement	F1
Overall Length	15.46 IN
Product Family	General Purpose
Pulley End Bearing Type	Sealed Bearing
Service Factor	1.00
Shaft Diameter	0.625 IN
Shaft Extension Location	Pulley End
Shaft Ground Indicator	No Shaft Grounding

Part Detail

Revision	AJ
Type	DC
Mech. spec.	34-5990
Base	
Status	PRD/A
Elec. spec.	34WG3675
Layout	34LY5990
Eff. date	10-25-2024
CD Diagram	CD0194
Poles	00
Leads	2#14 A Y
Proprietary	False
Created date	01-01-0001

Shaft Rotation	Reversible
Shaft Slinger Indicator	No Slinger

Nameplate

NP0891L					
CAT.NO.	CDP3445				
SPEC.	34-5990-3675				
HP	1/.75KW	**ENCL**	TEFC		
RPM	1750 1/MIN				
FRAME	56C	**TYPE**	3435P		
ARM V	90	**ARM A**	10		
FLD V		**FLD A**			
INSUL	F	**AMB.**	40		
DUTY	S1 CONT	**SUPPLY**	1.5		
BRG/DE	6203	**BRG/ODE**	6203		
BRUSHES	2/BP5000BK08				
		BLANK			
SER.					
BLANK	IP44 IC411 20KG				
APRV-CE	Y	**APRV-CSA**	Y	**APRV-UL**	Y

Accessories

Part number	Description	Multiplier
TK3400	TACHO MOUNTING KIT FOR TK3400	A8
TK3400-HPU	HPU10 MOUNTING KIT 34P/35P TEFC	

DC Motor Performance Data
Record # 325
Typical performance - not guaranteed values

Winding: 34WG3675-R001	**Type:** 3435P	**Enclosure:** TEFC

Nameplate Data	
Rated Output (HP)	1
R.P.M.	1750
Armature Volts	90
Armature Amps	10
Field Volts	
Field Amps	
Rating - Duty	40C AMB-CONT
Form Factor	1.5

General Characteristics	
Armature Resistance @ 25ºC	0.537 Ω

Load Characteristics at 90 Armature Volts

Load Point	**1**	**2**	**3**	**4**	**5**	**6**
Armature Amps	0.5	5	7.2	9.65	11.7	14.2
R.P.M.	1853	1758	1727	1711	1642	1604
Torque (LB-FT)	0	1.5	2.25	3	3.75	4.5

ABB Motors and Mechanical Inc.

WINDING # 34WG3675

Typical performance - not guaranteed values.

1 HP DC 1750 RPM 90 V 3435P
ENCL: TEFC DUTY: CONT CL: F

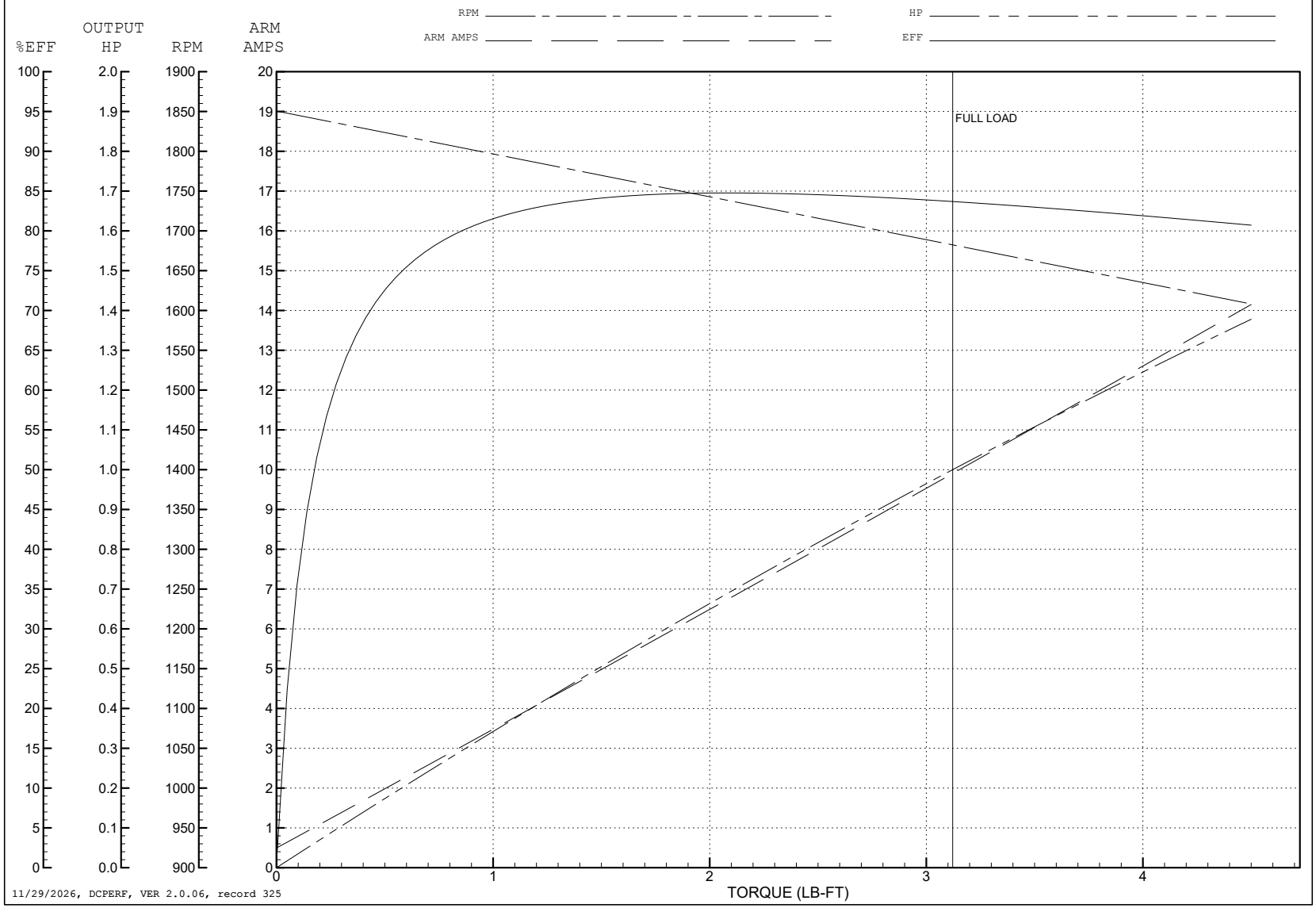

34LY5990

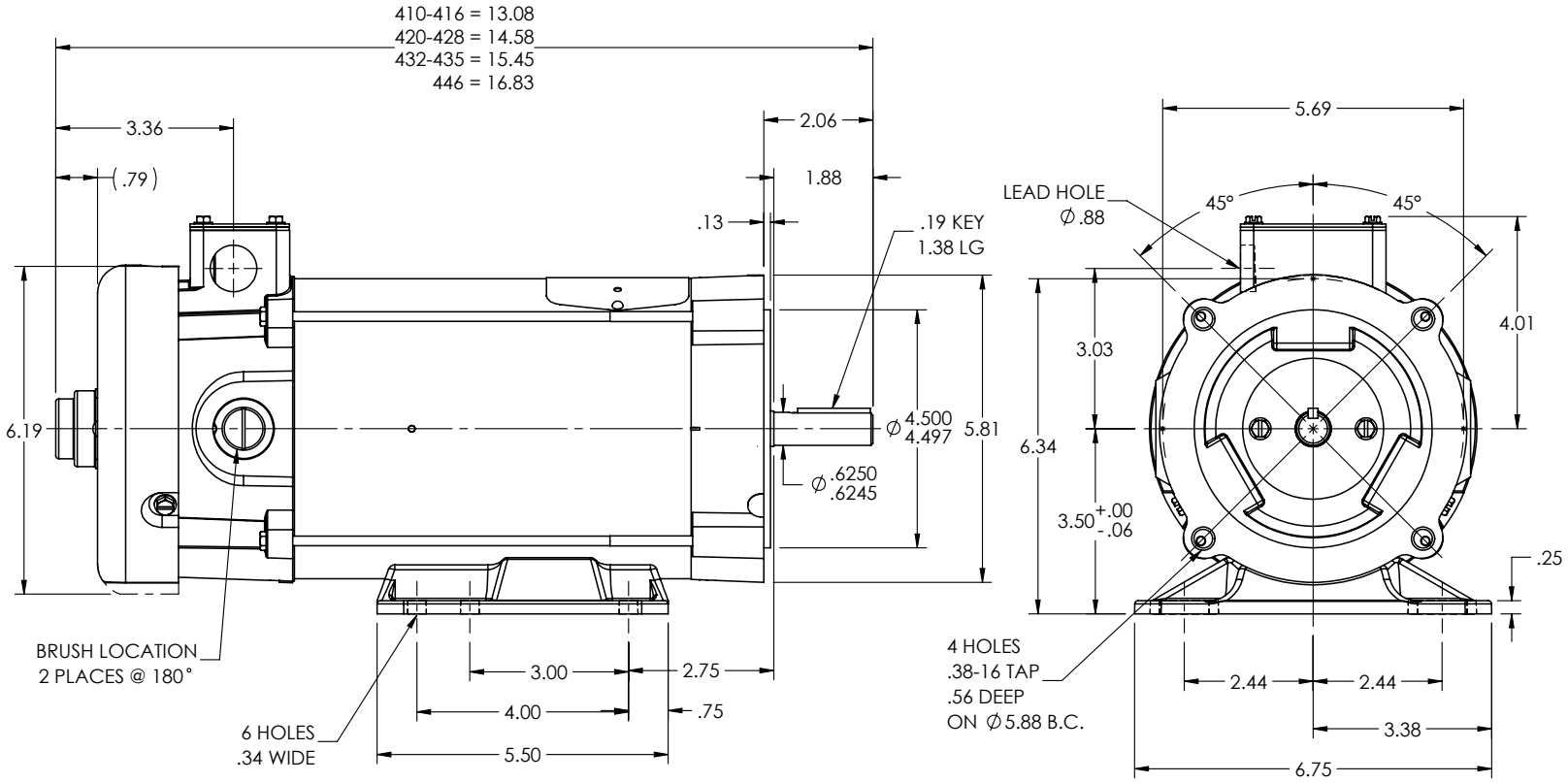

CUSTOMER IS RESPONSIBLE FOR DETERMINING THAT THE PRODUCT WILL PERFORM SUITABLY IN THE INTENDED APPLICATION

REV. DESC: LOAD TO SOLIDWORKS - REV M			
REV: N	VERSION: 02	REVISED: 04:26:06 12/21/2022	TDR: 000001201165
34LY5990	MODEL NO. 34LY5990		REF: -
	BY: ENFRAJ0		

BALDOR - RELIANCE®

SPL HORZ "C" 34PM NEMA 56C TEFC W/M.F.T.K.

34LY5990

CD0194

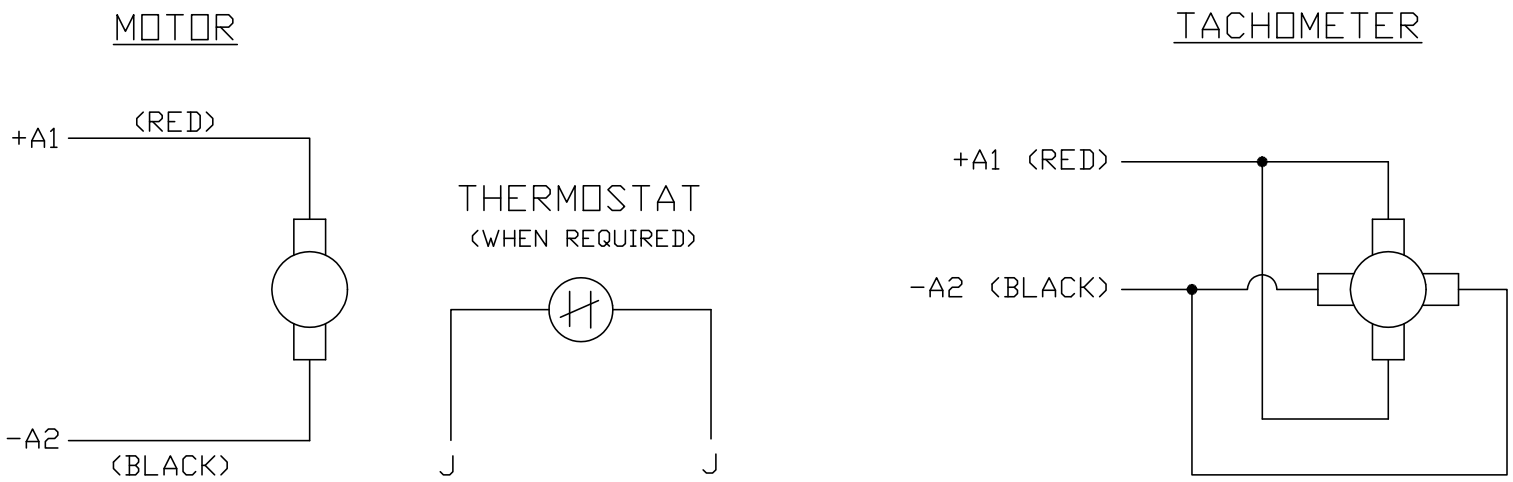

NOTES:

1. CCW ROTATION AS SHOWN FACING COMMUTATOR END. TO REVERSE MOTOR ROTATION OR TACHOMETER OUTPUT POLARITY INTERCHANGE LEADS A1(RED) & A2(BLACK)

2. LEAD COLORS FOR REFERENCE ONLY & NOT SPECIFIED BY THIS DRAWING. LEAD COLORS SPECIFIED BY LAYOUT DRAWING & BILL OF MATERIAL ONLY.

CD0194

MATL: –				BALDOR ELECTRIC Co.
REV: E	ADDED NOTE "LEAD COLORS FOR REFERENCE ONLY &....			
CD0194	SCALE: –	BY: CK	REVISED: 07/28/95	CD TYPE P DC PERMANENT MAGNET MOTORS AND TACHOMETERS
	FILE: AAA00004503		TDR: 0078737	