ABB BALDOR RELIANCE

Customer information packet

CDP3445-V12

1HP, 1800RPM, DC, 56C, 3435P, TEFC, 12V
Class - None
Division -

Copyright © All product information within this document is subject to ABB Motors and Mechanical Inc. copyright © protection, unless otherwise noted.
11/29/2026 5:20:37 AM

Specifications

Armature Voltage	12 V
Base Speed	1800 rpm
Enclosure	TEFC
Frame	56C
Frame Material	Steel
Haz Area Class and Group	None
Output Power	1.000 HP
Agency Approvals	CSA
	UR
Ambient Temperature	40 °C
Armature Current	85.6 a
Armature Inertia	12.052 lb-ft2
Base Indicator	Rigid
Bearing Grease Type	Polyrex EM (-20F +300F)
Drip Cover	No Drip Cover
Duty Rating	CONT
Feedback Device	NO FEEDBACK
Heater Indicator	No Heater
Lifting Lugs	No Lifting Lugs
Motor Lead Exit	Special
Motor Lead Quantity/Wire Size	2 @ 8 AWG
Motor Lead Termination	Ring Terminals
Motor Standards	NEMA
Mounting Arrangement	F3
Overall Length	15.89 IN
Product Family	General Purpose
Pulley End Bearing Type	Sealed Bearing
RoHS Status	ROHS COMPLIANT
Service Factor	1.00
Shaft Diameter	0.625 IN
Shaft Extension Location	Pulley End
Shaft Ground Indicator	No Shaft Grounding

Part Detail

Revision	L
Type	DC
Mech. spec.	34-7074
Base	
Status	PRD/A
Elec. spec.	34WGZ621
Layout	34LY7074
Eff. date	09-01-2026
CD Diagram	CD0194
Poles	00
Leads	
Proprietary	False
Created date	01-01-0001

Shaft Rotation	Reversible
Shaft Slinger Indicator	No Slinger

Nameplate

NP0111L					
CAT.NO.	CDP3445-V12				
SPEC.	34-7074Z621G1				
HP	1		**ENCL**	TEFC	
RPM	1800				
FRAME	56C	**TYPE**	3435P		
ARM V	12		**ARM A**	85.6	
FLD V			**FLD A**		
INSUL	H	**AMB.**	40		
DUTY	CONT		**SUPPLY**	A	
BRG/DE	6203	**BRG/ODE**	6203		
BRUSHES	2/BP5112AU01				
		BLANK			
SER.					
BLANK					
APRV-CSA		**APRV-UL**			

DC Motor Performance Data
Record # 506
Typical performance - not guaranteed values

Winding: 34WGZ621-R003	**Type:** 3435P	**Enclosure:** TEFC

Nameplate Data	
Rated Output (HP)	1
R.P.M.	1800
Armature Volts	12
Armature Amps	85.6
Field Volts	
Field Amps	
Rating - Duty	40C AMB-CONT
Power Supply Code	A

General Characteristics	
Armature Resistance @ 25ºC	0.0164 Ω
Voltage Constant	6.208 v/krpm
Armature Inductance	0.1149 mH
Armature Inertia	12.052 LI²

Load Characteristics at 12 Armature Volts

Load Point	**1**	**2**	**3**	**4**	**5**	**6**	**7**
Armature Amps	4.9	20.3	36.4	51.3	67.3	83.8	100.5
R.P.M.	1911	1853	1790	1732	1668	1594	1542
Torque (LB-FT)	0	0.75	1.5	2.25	3	3.75	4.5

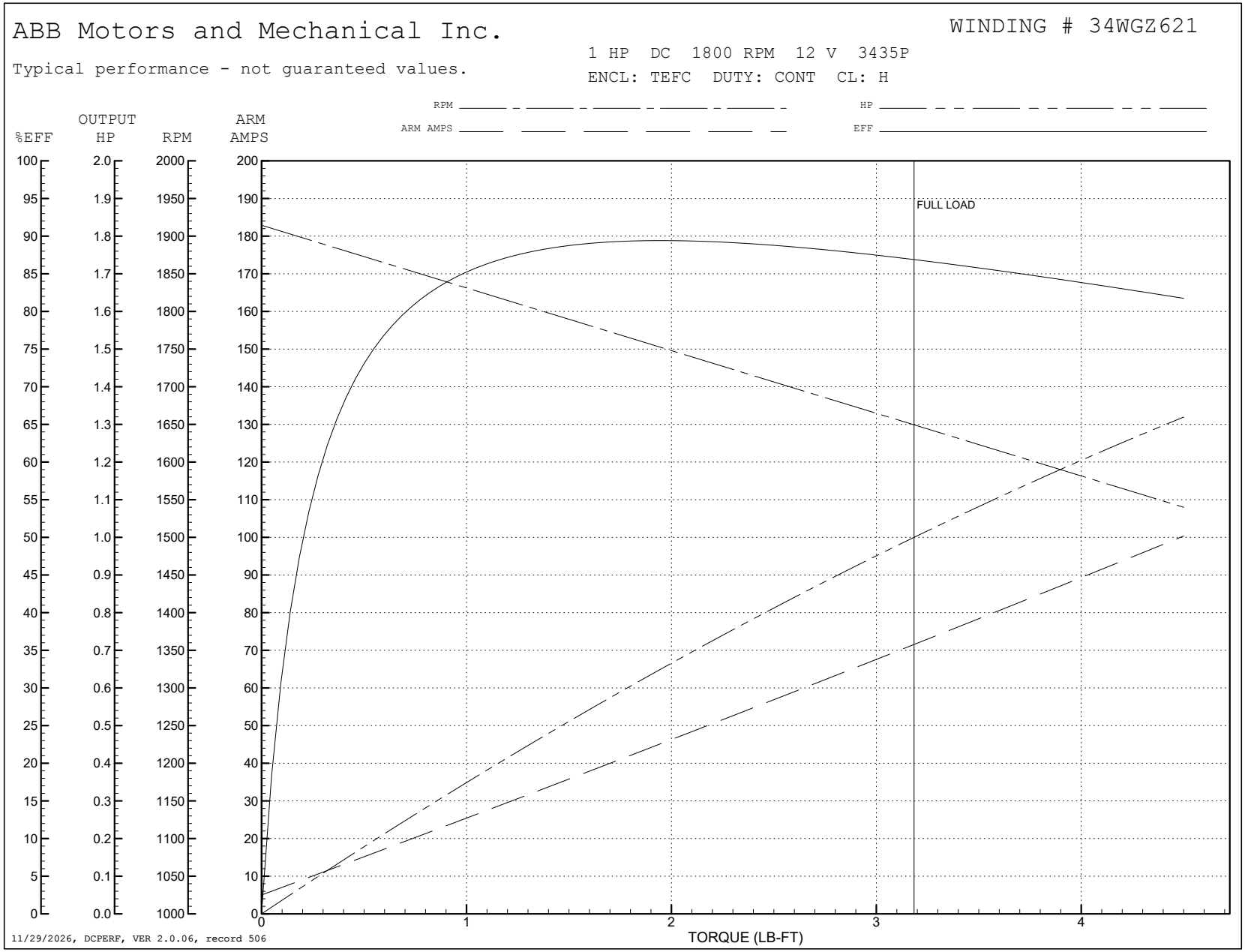
ABB Motors and Mechanical Inc.
WINDING # 34WGZ621
Typical performance - not guaranteed values.
1 HP DC 1800 RPM 12 V 3435P
ENCL: TEFC DUTY: CONT CL: H
RPM
ARM AMPS
HP
EFF
%EFF
OUTPUT HP
RPM
ARM AMPS
FULL LOAD
TORQUE (LB-FT)
11/29/2026, DCPERF, VER 2.0.06, record 506

34LY7074

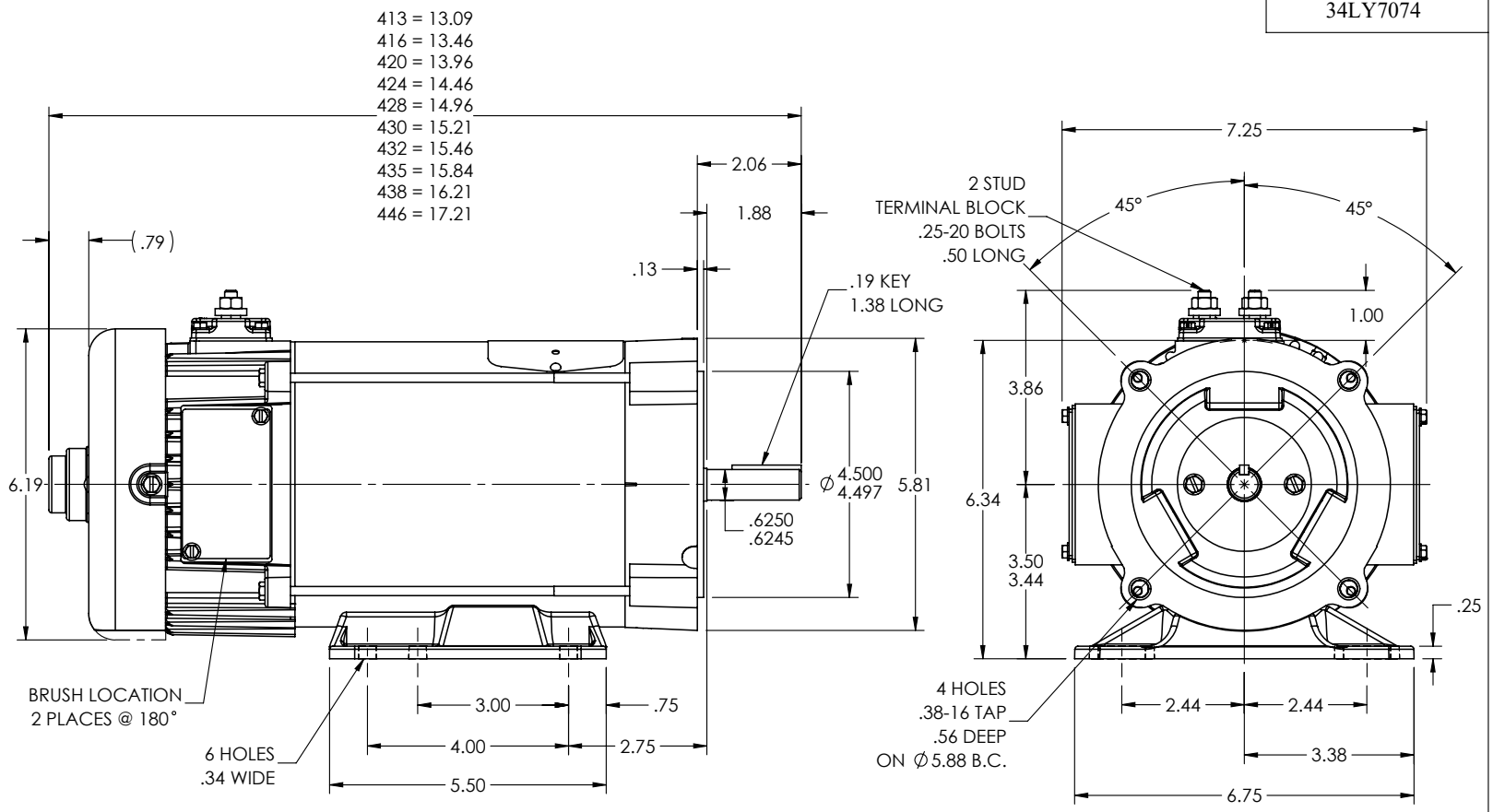

34LY7074

CUSTOMER IS RESPONSIBLE FOR DETERMINING THAT THE PRODUCT WILL PERFORM SUITABLY IN THE INTENDED APPLICATION

REV. DESC: LOAD TO SOLIDWORKS - REV C			
REV: D	VERSION: 04	REVISED: 08:52:48 12/28/2022	TDR: 000001201165
34LY7074	MODEL NO. 34LY7074		REF: -
	BY: ENFRAJ0		

BALDOR - RELIANCE®

STD HORZ 34PM NEMA 56C TEFC W/TERMINAL BLOCK (HI DEMAG MTR)

CD0194

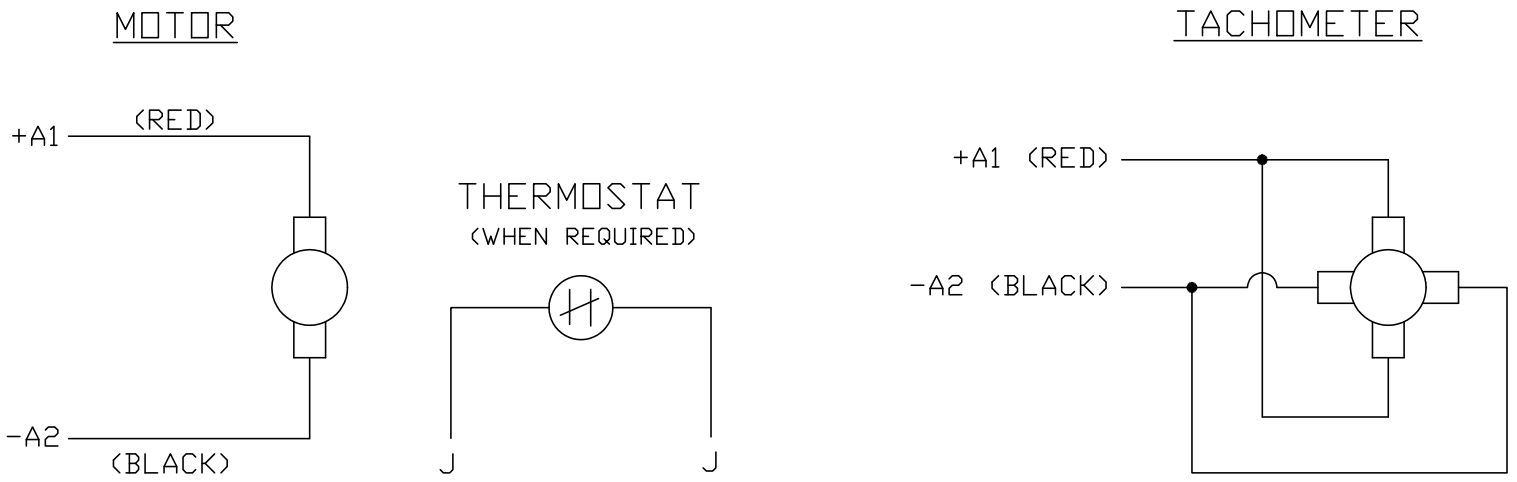

NOTES:

1. CCW ROTATION AS SHOWN FACING COMMUTATOR END. TO REVERSE MOTOR ROTATION OR TACHOMETER OUTPUT POLARITY INTERCHANGE LEADS A1(RED) & A2(BLACK)

2. LEAD COLORS FOR REFERENCE ONLY & NOT SPECIFIED BY THIS DRAWING. LEAD COLORS SPECIFIED BY LAYOUT DRAWING & BILL OF MATERIAL ONLY.

CD0194

MATL: –				BALDOR ELECTRIC Co.
REV: E	ADDED NOTE "LEAD COLORS FOR REFERENCE ONLY &....			
CD0194	SCALE: –	BY: CK	REVISED: 07/28/95	CD TYPE P DC PERMANENT MAGNET MOTORS AND TACHOMETERS
	FILE: AAA00004503		TDR: 0078737	