ABB BALDOR RELIANCE

Customer information packet

CDP3443

.75HP, 2500RPM, DC, 56C, 3420P, TEFC, F1
Class - None
Division -

Copyright © All product information within this document is subject to ABB Motors and Mechanical Inc. copyright © protection, unless otherwise noted.
11/25/2026 3:56:44 AM

Specifications

Armature Voltage	90 V
Base Speed	2400 rpm
Enclosure	TEFC
Frame	56C
Frame Material	Steel
Haz Area Class and Group	None
Output Power	0.750 HP
Agency Approvals	CE
	CSA
	UR
Ambient Temperature	40 °C
Armature Current	7.5 a
Armature Inertia	7.804 lb-ft2
Base Indicator	Rigid
Bearing Grease Type	Polyrex EM (-20F +300F)
Drip Cover	No Drip Cover
Duty Rating	CONT
Feedback Device	NO FEEDBACK
Heater Indicator	No Heater
Lifting Lugs	No Lifting Lugs
Motor Lead Exit	Ko Box
Motor Lead Quantity/Wire Size	2 @ 14 AWG, A
Motor Lead Termination	Flying Leads
Motor Standards	NEMA
Mounting Arrangement	F1
Overall Length	14.59 IN
Product Family	General Purpose
Pulley End Bearing Type	Sealed Bearing
Service Factor	1.00
Shaft Diameter	0.625 IN
Shaft Extension Location	Pulley End
Shaft Ground Indicator	No Shaft Grounding

Part Detail

Revision	AE
Type	DC
Mech. spec.	34-5990
Base	
Status	PRD/A
Elec. spec.	34WG4542
Layout	34LY5990
Eff. date	10-25-2024
CD Diagram	CD0194
Poles	00
Leads	2#14 A Y
Proprietary	False
Created date	01-01-0001

Shaft Rotation	Reversible
Shaft Slinger Indicator	No Slinger

Nameplate

NP0891L							
CAT.NO.	CDP3443						
SPEC.	34-5990-4542						
HP	.75/.56KW		**ENCL**	TEFC			
RPM	2500 1/MIN IC411 16KG						
FRAME	56C		**TYPE**	3420P			
ARM V	90		**ARM A**	7.5			
FLD V			**FLD A**				
INSUL	F		**AMB.**	40			
DUTY	CONT			**SUPPLY**	1.5		
BRG/DE	6203			**BRG/ODE**	6203		
BRUSHES	2/BP5000BK08						
				BLANK	IP44		
SER.							
BLANK							
APRV-CE	Y	**APRV-CSA**	Y		**APRV-UL**	Y	

Accessories

Part number	Description	Multiplier
TK3400	TACHO MOUNTING KIT FOR TK3400	A8
TK3400-HPU	HPU10 MOUNTING KIT 34P/35P TEFC	

34LY5990

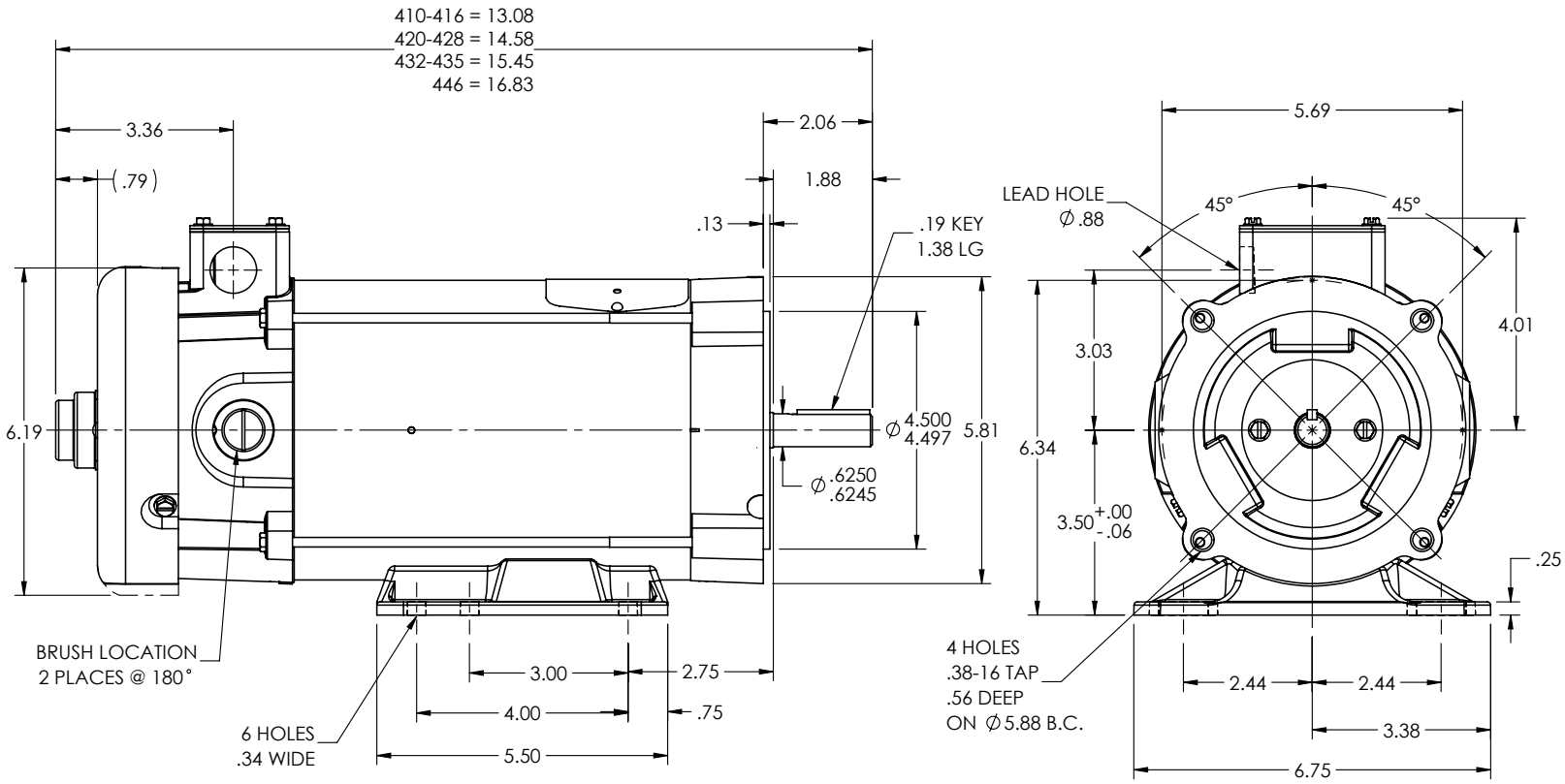

CUSTOMER IS RESPONSIBLE FOR DETERMINING THAT THE PRODUCT WILL PERFORM SUITABLY IN THE INTENDED APPLICATION

REV. DESC: LOAD TO SOLIDWORKS - REV M			
REV: N	VERSION: 02	REVISED: 04:26:06 12/21/2022	TDR: 000001201165
34LY5990	MODEL NO. 34LY5990		REF: -
	BY: ENFRAJ0		

BALDOR - RELIANCE®

SPL HORZ "C" 34PM NEMA 56C TEFC W/M.F.T.K.

34LY5990

CD0194

MOTOR

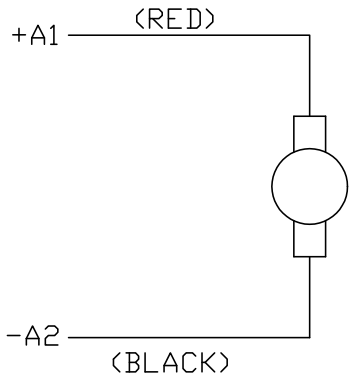

THERMOSTAT
(WHEN REQUIRED)

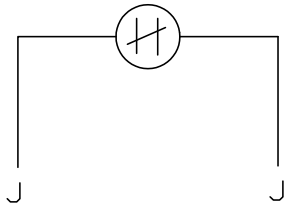

TACHOMETER

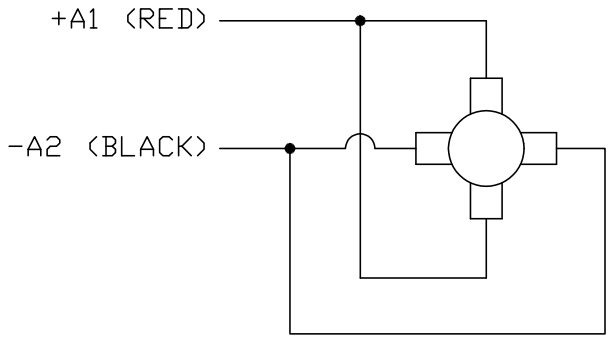

NOTES:

1. CCW ROTATION AS SHOWN FACING COMMUTATOR END. TO REVERSE MOTOR ROTATION OR TACHOMETER OUTPUT POLARITY INTERCHANGE LEADS A1(RED) & A2(BLACK)

2. LEAD COLORS FOR REFERENCE ONLY & NOT SPECIFIED BY THIS DRAWING. LEAD COLORS SPECIFIED BY LAYOUT DRAWING & BILL OF MATERIAL ONLY.

CD0194

MATL: –				BALDOR ELECTRIC Co.
REV: E	ADDED NOTE "LEAD COLORS FOR REFERENCE ONLY &....			
CD0194	SCALE: –	BY: CK	REVISED: 07/28/95	CD TYPE P DC PERMANENT MAGNET MOTORS AND TACHOMETERS
	FILE: AAA00004503		TDR: 0078737	