34LY6893

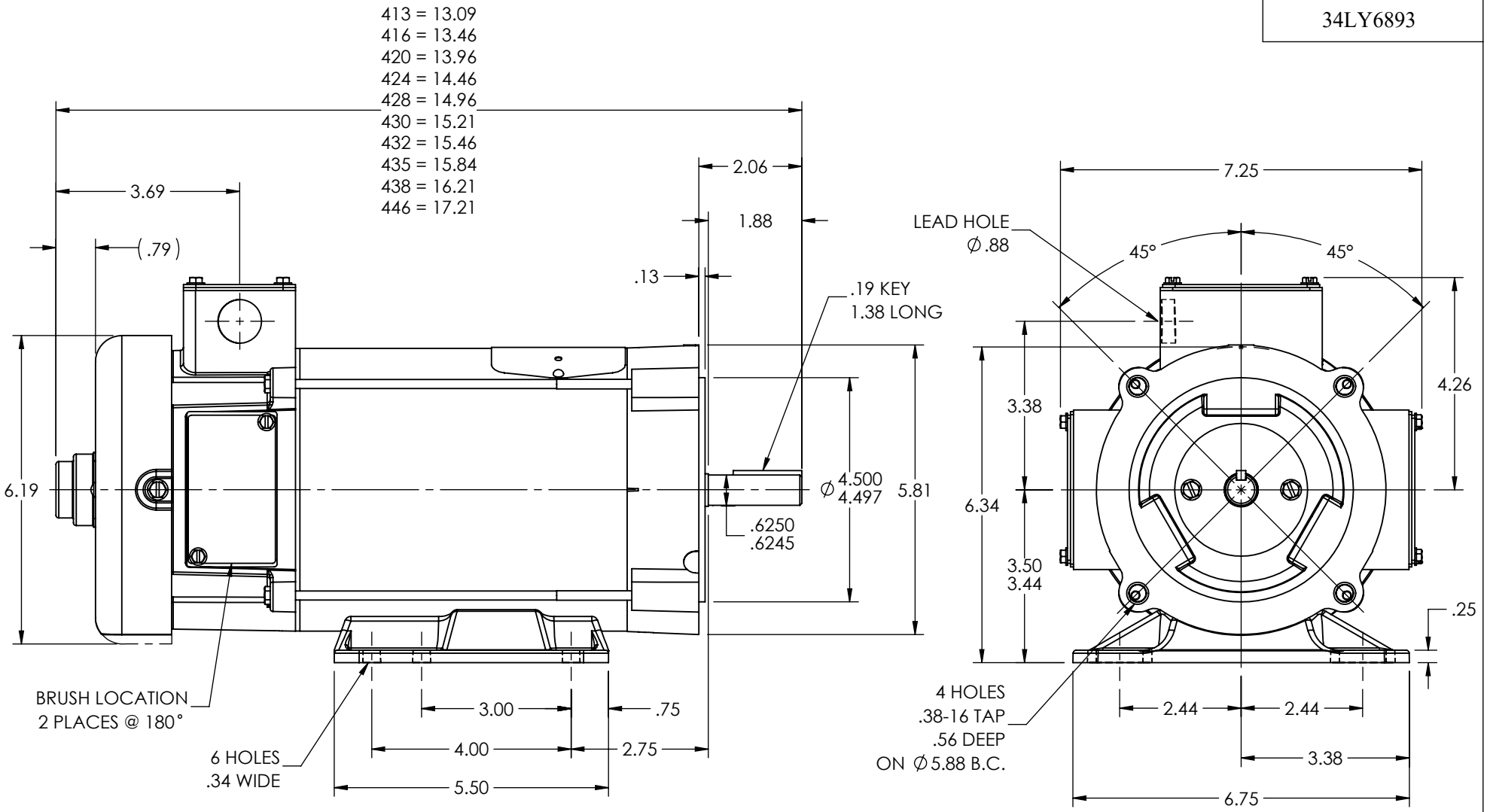


CUSTOMER IS RESPONSIBLE FOR DETERMINING THAT THE PRODUCT WILL PERFORM SUITABLY IN THE INTENDED APPLICATION

| | | | |
|---|---|---|---|
| REV. DESC: LOAD TO SOLIDWORKS - REV H | | | |
| REV: J | VERSION: 07 | REVISED: 04:35:03 12/27/2022 | TDR: 000001201165 |
| MODEL NO. 34LY6893 | | | REF: - |
| BY: ENFRAJ0 | | | |

BALDOR - RELIANCE®

STD HORZ 34PM NEMA 56C TEFC (HI DEMAG MOTOR)

34LY6893

34LY6893