ABB BALDOR RELIANCE

Customer information packet

CDP3335

.5HP, 2500RPM, DC, 56C, 3327P, TENV, F1

Copyright © All product information within this document is subject to ABB Motors and Mechanical Inc. copyright © protection, unless otherwise noted.
11/23/2026 2:35:13 AM

Specifications

Armature Voltage	90 V
Base Speed	2500 rpm
Enclosure	TENV
Frame	56C
Frame Material	Steel
Output Power	0.500 HP
Agency Approvals	CE
	CSA
	UR
Ambient Temperature	40 °C
Armature Current	5.0 a
Armature Inertia	6.318 lb-ft2
Base Indicator	Rigid
Bearing Grease Type	Polyrex EM (-20F +300F)
Drip Cover	No Drip Cover
Duty Rating	CONT
Feedback Device	NO FEEDBACK
Heater Indicator	No Heater
Lifting Lugs	No Lifting Lugs
Motor Lead Exit	Ko Box
Motor Lead Quantity/Wire Size	2 @ 18 AWG, A
Motor Lead Termination	Flying Leads
Motor Standards	NEMA
Mounting Arrangement	F1
Overall Length	13.19 IN
Product Family	General Purpose
Pulley End Bearing Type	Sealed Bearing
RoHS Status	ROHS COMPLIANT
Service Factor	1.00
Shaft Diameter	0.625 IN
Shaft Extension Location	Pulley End
Shaft Ground Indicator	No Shaft Grounding

Part Detail

Revision	AF
Type	DC
Mech. spec.	33-2123
Base	
Status	PRD/A
Elec. spec.	33WGZ148
Layout	33LY2123
Eff. date	10-24-2024
CD Diagram	CD0194
Poles	00
Leads	2#18 A Y
Proprietary	False
Created date	01-01-0001

Shaft Rotation	Reversible
Shaft Slinger Indicator	No Slinger

Nameplate

NP0891L					
CAT.NO.	CDP3335				
SPEC.	33-2123Z148				
HP	.5/.37KW	**ENCL**	TENV		
RPM	2500 1/MIN				
FRAME	56C	**TYPE**	3327P		
ARM V	90	**ARM A**	5		
FLD V		**FLD A**			
INSUL	F	**AMB.**	40		
DUTY	S1 CONT	**SUPPLY**	1.3		
BRG/DE	6203	**BRG/ODE**	6203		
BRUSHES	2/BP5011CV01				
		BLANK			
SER.					
BLANK	IP44 IC410 12KG				
APRV-CE	Y	**APRV-CSA**	Y	**APRV-UL**	Y

Accessories

Part number	Description	Multiplier
TK3300	TACHO MOUNTING KIT TK3300	A8
TK3300-HPU	HPU10 MOUNTING KIT 33P/34P TENV	A8

DC Motor Performance Data
Record # 352
Typical performance - not guaranteed values

Winding: 33WGZ148-R002 **Type:** 3327P **Enclosure:** TENV

Nameplate Data	
Rated Output (HP)	0.5
R.P.M.	2500
Armature Volts	90
Armature Amps	5
Field Volts	
Field Amps	
Rating - Duty	40C AMB-CONT
Form Factor	1.3

General Characteristics	
Armature Resistance @ 25ºC	0.664 Ω
Voltage Constant	35.76 v/krpm
Armature Inductance	5.119 mH
Armature Inertia	6.318 LI²
Temp. Rise @ Rated Load	79°C

Load Characteristics at 90 Armature Volts

Load Point	1	2	3	4	5	6	7
Armature Amps	0.5	2.5	3.5	4.6	5.4	6.7	8.8
R.P.M.	2526	2469	2447	2426	2415	2375	2332
Torque (LB-FT)	0	0.5	0.75	1	1.25	1.5	2

ABB Motors and Mechanical Inc.

WINDING # 33WGZ148

0.5 HP DC 2500 RPM 90 V 3327P
ENCL: TENV DUTY: CONT CL: F

Typical performance - not guaranteed values.

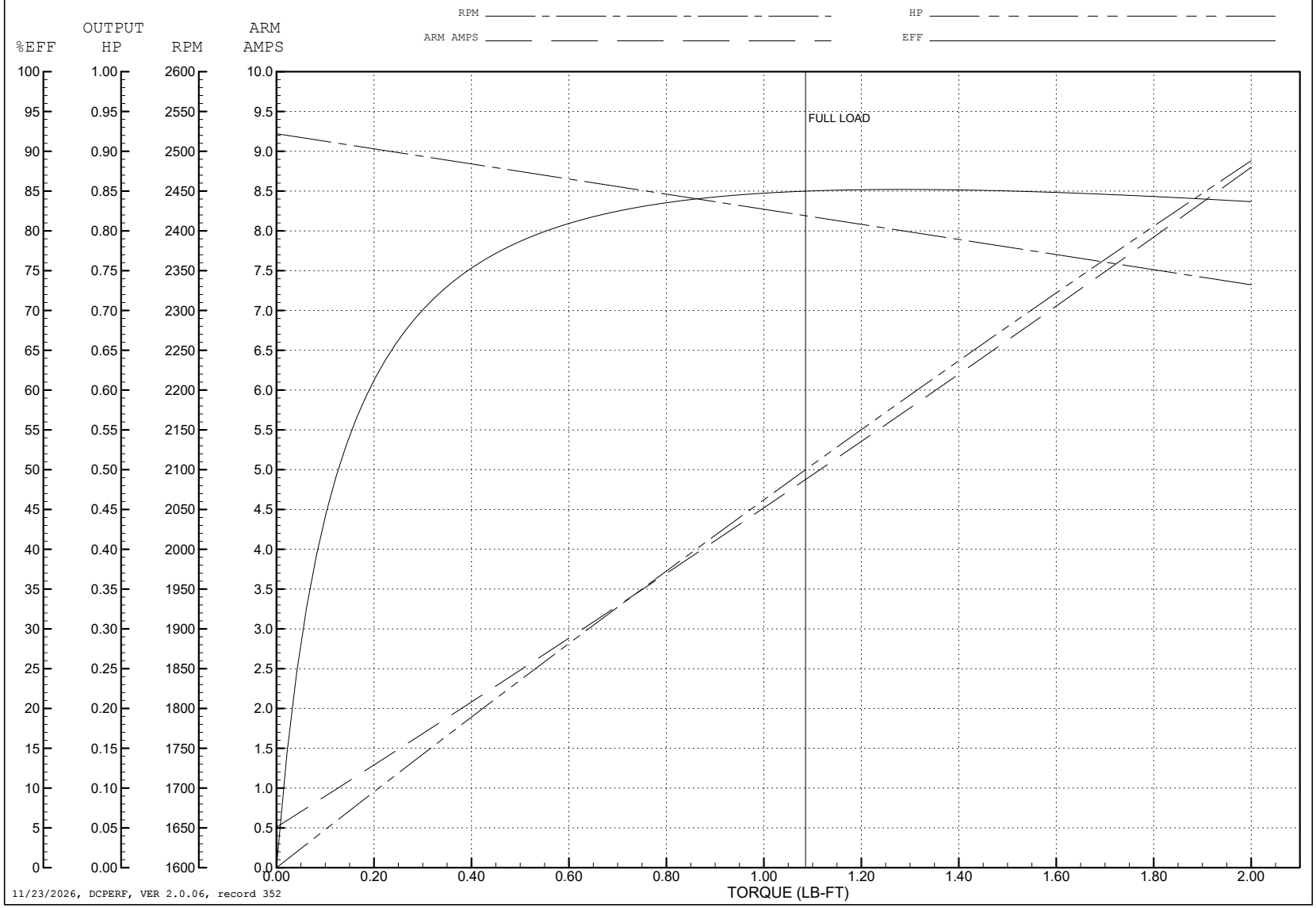

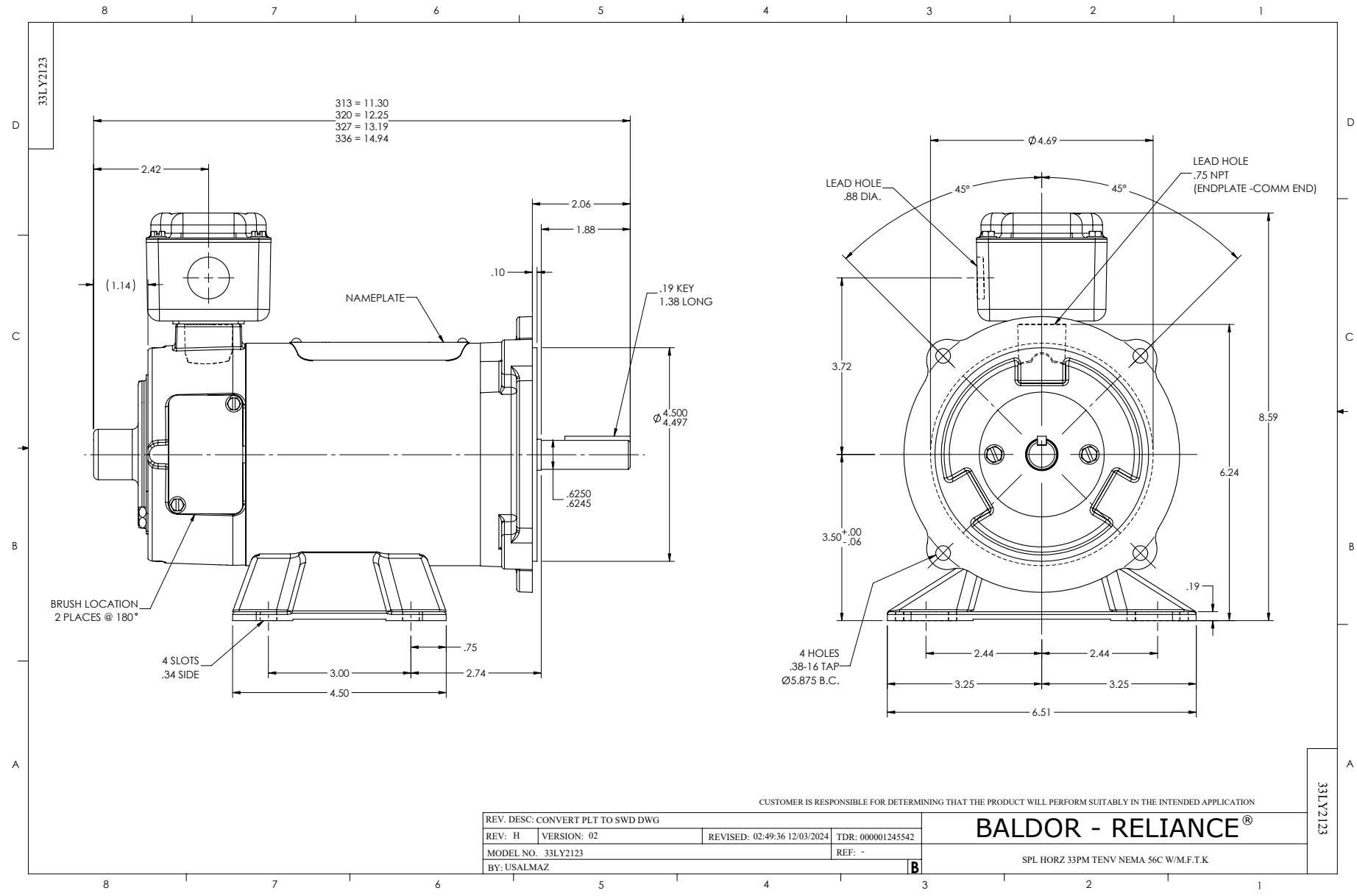
33LY2123
313 = 11.30
320 = 12.25
327 = 13.19
336 = 14.94
2.42
2.06
1.88
.10
(1.14)
NAMEPLATE
.19 KEY
1.38 LONG
Ø 4.500
4.497
.6250
.6245
BRUSH LOCATION
2 PLACES @ 180°
4 SLOTS
.34 SIDE
.75
3.00
2.74
4.50
Ø4.69
LEAD HOLE
.88 DIA.
45°
45°
LEAD HOLE
.75 NPT
(ENDPLATE -COMM END)
3.72
8.59
6.24
3.50 +.00 -.06
.19
4 HOLES
.38-16 TAP
Ø5.875 B.C.
2.44
2.44
3.25
3.25
6.51
CUSTOMER IS RESPONSIBLE FOR DETERMINING THAT THE PRODUCT WILL PERFORM SUITABLY IN THE INTENDED APPLICATION
REV. DESC: CONVERT PLT TO SWD DWG
REV: H
VERSION: 02
REVISED: 02:49:36 12/03/2024
TDR: 000001245542
MODEL NO. 33LY2123
REF: -
BY: USALMAZ
B
BALDOR - RELIANCE®
SPL HORZ 33PM TENV NEMA 56C W/M.F.T.K
33LY2123

CD0194

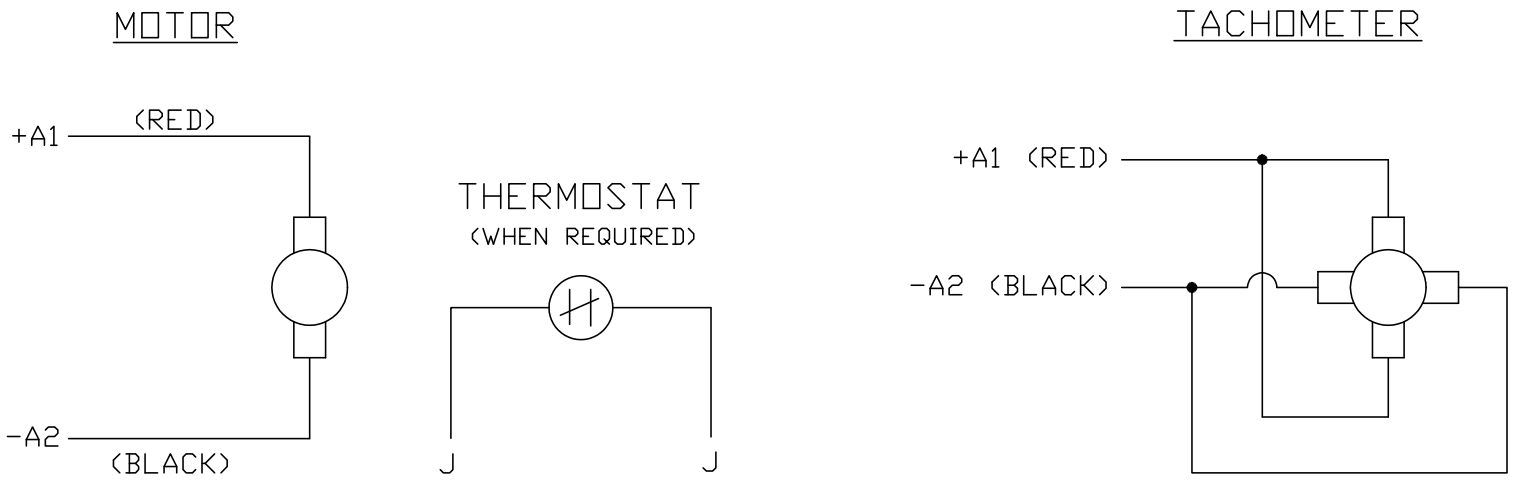

NOTES:

1. CCW ROTATION AS SHOWN FACING COMMUTATOR END. TO REVERSE MOTOR ROTATION OR TACHOMETER OUTPUT POLARITY INTERCHANGE LEADS A1(RED) & A2(BLACK)

2. LEAD COLORS FOR REFERENCE ONLY & NOT SPECIFIED BY THIS DRAWING. LEAD COLORS SPECIFIED BY LAYOUT DRAWING & BILL OF MATERIAL ONLY.

CD0194

MATL: –				BALDOR ELECTRIC Co.
REV: E	ADDED NOTE "LEAD COLORS FOR REFERENCE ONLY &....			
CD0194	SCALE: –	BY: CK	REVISED: 07/28/95	CD TYPE P DC PERMANENT MAGNET MOTORS AND TACHOMETERS
	FILE: AAA00004503		TDR: 0078737	