36LY5580

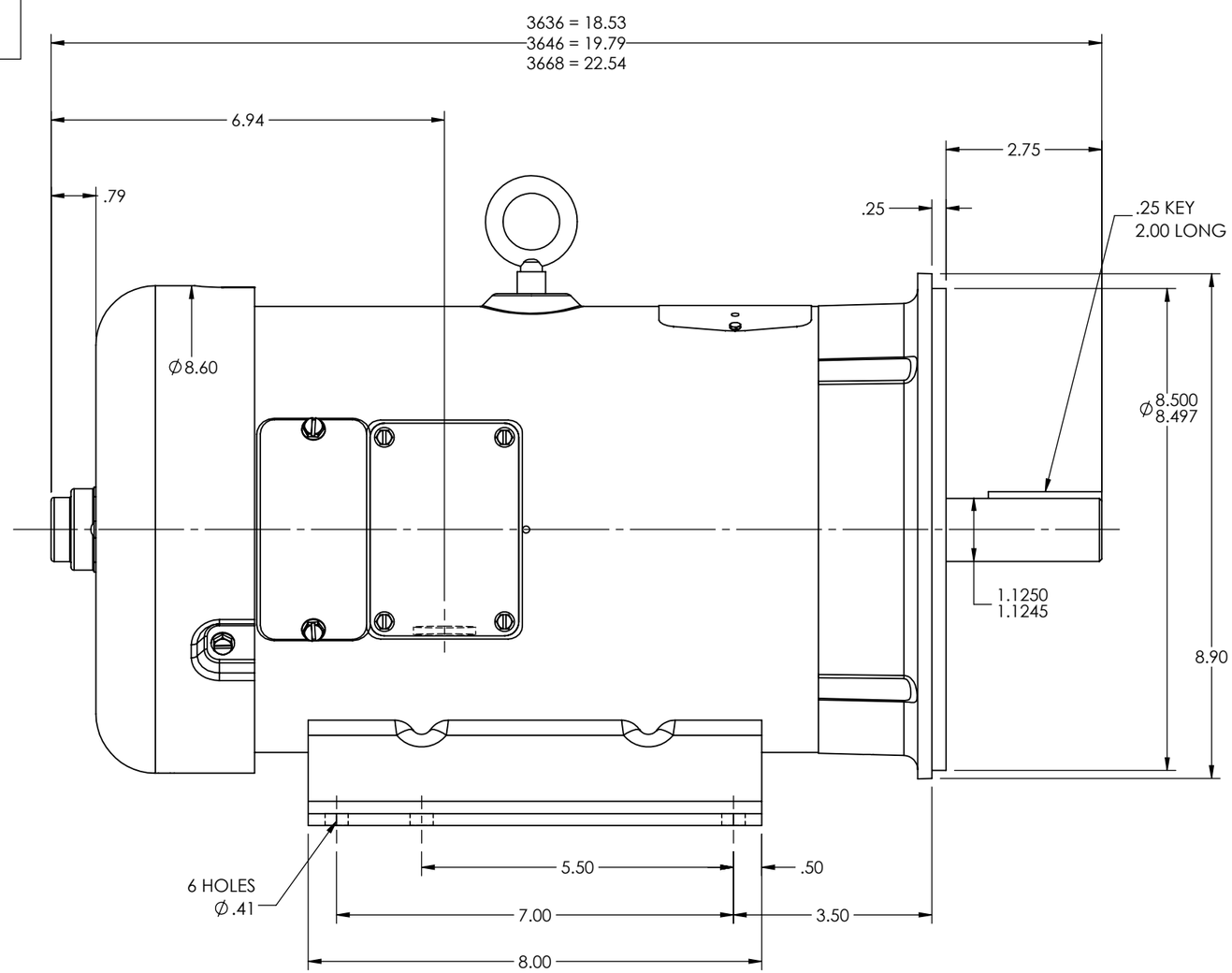

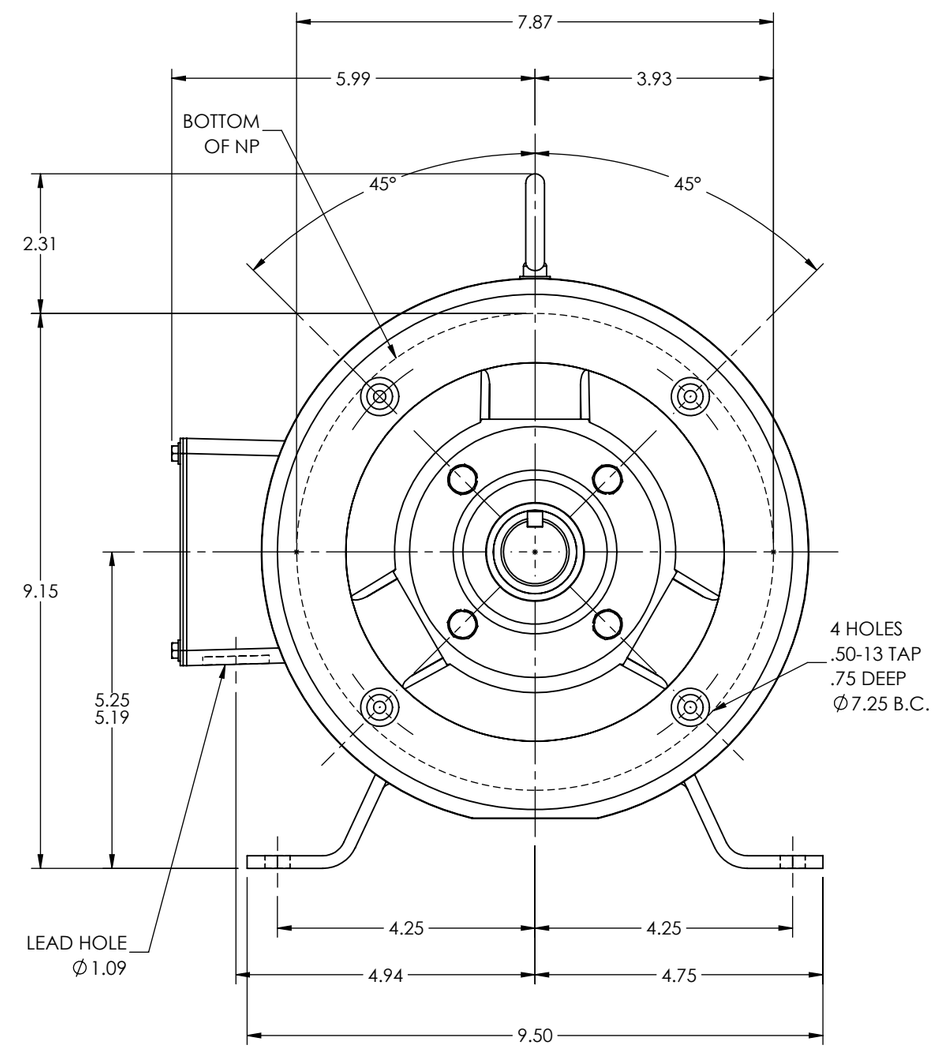

CUSTOMER IS RESPONSIBLE FOR DETERMINING THAT THE PRODUCT WILL PERFORM SUITABLY IN THE INTENDED APPLICATION

REV. DESC: CONVERT AUTOCAD DRW TO SWD			
REV: E	VERSION: 05	REVISED: 03:51:44 05/25/2023	TDR: 000001209775
MODEL NO. 36LY5580			REF: -
BY: ENALEM0			B

BALDOR - RELIANCE®

HOR 36DC NEMA 213-5C TEFC 2P W/BA = 3.50 & U = 1.1250 W/MFTK

36LY5580