ABB BALDOR RELIANCE

Customer information packet

CD5333

.33HP, 1750RPM, DC, 56C, 3513D, TEFC, F1
Class - None
Division -

Copyright © All product information within this document is subject to ABB Motors and Mechanical Inc. copyright © protection, unless otherwise noted.
11/27/2026 12:50:24 AM

Specifications

Armature Voltage	90 V
Base Speed	1750 rpm
Enclosure	TEFC
Field Voltage	100 V
	50 V
Frame	56C
Frame Material	Steel
Haz Area Class and Group	None
Output Power	0.330 HP
Agency Approvals	CSA
	UR
Ambient Temperature	40 °C
Armature Current	3.7 a
Armature Inertia	5.073 lb-ft2
Base Indicator	Rigid
Bearing Grease Type	Polyrex EM (-20F +300F)
Drip Cover	No Drip Cover
Duty Rating	CONT
Feedback Device	NO FEEDBACK
Field Winding Type	SHUNT
Heater Indicator	No Heater
Lifting Lugs	No Lifting Lugs
Motor Lead Exit	Ko Box
Motor Lead Quantity/Wire Size	2 @ 14 AWG
	4 @ 18 AWG
Motor Lead Termination	Flying Leads
Motor Standards	NEMA
Mounting Arrangement	F1
Overall Length	13.85 IN
Product Family	General Purpose
Pulley End Bearing Type	Sealed Bearing
Service Factor	1.00

Part Detail

Revision	Q
Type	DC
Mech. spec.	35P445
Base	
Status	PRD/A
Elec. spec.	35WGZ387
Layout	35LYP445
Eff. date	10-28-2024
CD Diagram	CD0860C01
Poles	00
Leads	
Proprietary	False
Created date	01-01-0001

Shaft Diameter	0.625 IN
Shaft Extension Location	Pulley End
Shaft Ground Indicator	No Shaft Grounding
Shaft Rotation	Reversible
Shaft Slinger Indicator	No Slinger

Nameplate

NP0111L					
CAT.NO.	CD5333				
SPEC.	35P445Z387				
HP	.33	**ENCL**	TEFC		
RPM	1750				
FRAME	56C	**TYPE**	3513D		
ARM V	90	**ARM A**	3.7		
FLD V	100/50	**FLD A**	.5/1		
INSUL	F	**AMB.**	40		
DUTY	CONT	**SUPPLY**	1.3		
BRG/DE	6205	**BRG/ODE**	6203		
BRUSHES	2/BP5000T07				
	BLANK				
SER.					
BLANK					
APRV-CSA	**APRV-UL**				

Accessories

Part number	Description	Multiplier
TK3500	TACHO MOUTING KIT TK3500	A8

DC Motor Performance Data
Record # 1415
Typical performance - not guaranteed values

Winding: 35WGZ387-R001	**Type:** 3513D	**Enclosure:** TEFC

Nameplate Data	
Rated Output (HP)	0.333
R.P.M.	1750
Armature Volts	90
Armature Amps	3.7
Field Volts	100 / 50
Field Amps	0.5 / 1
Rating - Duty	40C AMB-CONT
Form Factor	1.3

General Characteristics	
Armature Resistance @ 25ºC	2.309 Ω
Commutating Winding Resistance @ 25ºC	0.576 Ω
Shunt Winding Resistance @ 25ºC	92.762 Ω

Load Characteristics at 90 Armature Volts, 100 Field Volts, 0.5 Field Amps

Load Point	1	2	3	4	5	6	7
Armature Amps	0.6	1.4	2.1	2.9	3.7	4.4	6
R.P.M.	1922	1860	1801	1757	1708	1652	1540
Torque (LB-FT)	0	0.258	0.516	0.773	1.01	1.268	1.719

ABB Motors and Mechanical Inc.

WINDING # 35WGZ387

0.333 HP DC 1750 RPM 90 V ARM 100/50 V FLD 3513D

Typical performance - not guaranteed values.

ENCL: TEFC DUTY: CONT CL: F

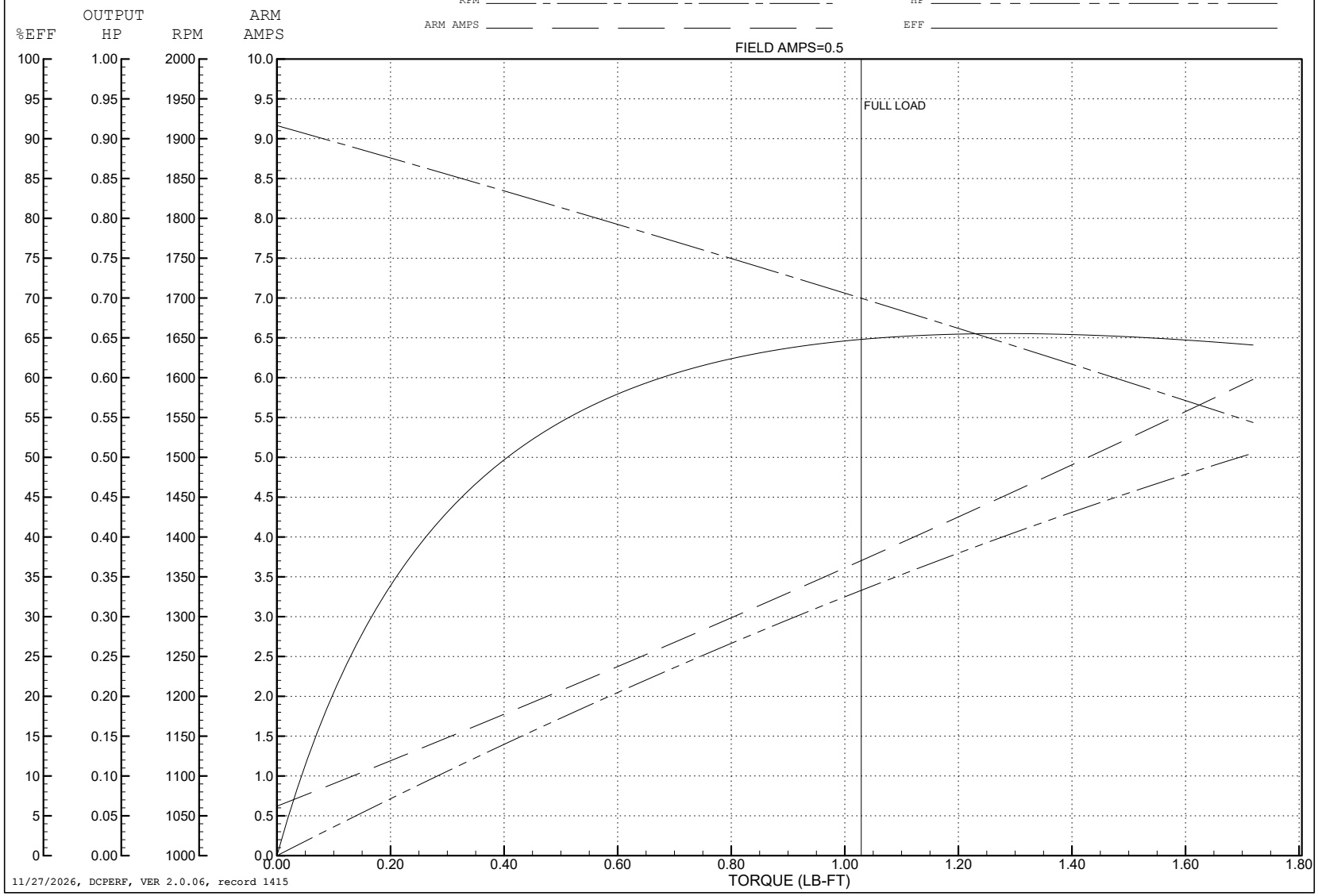

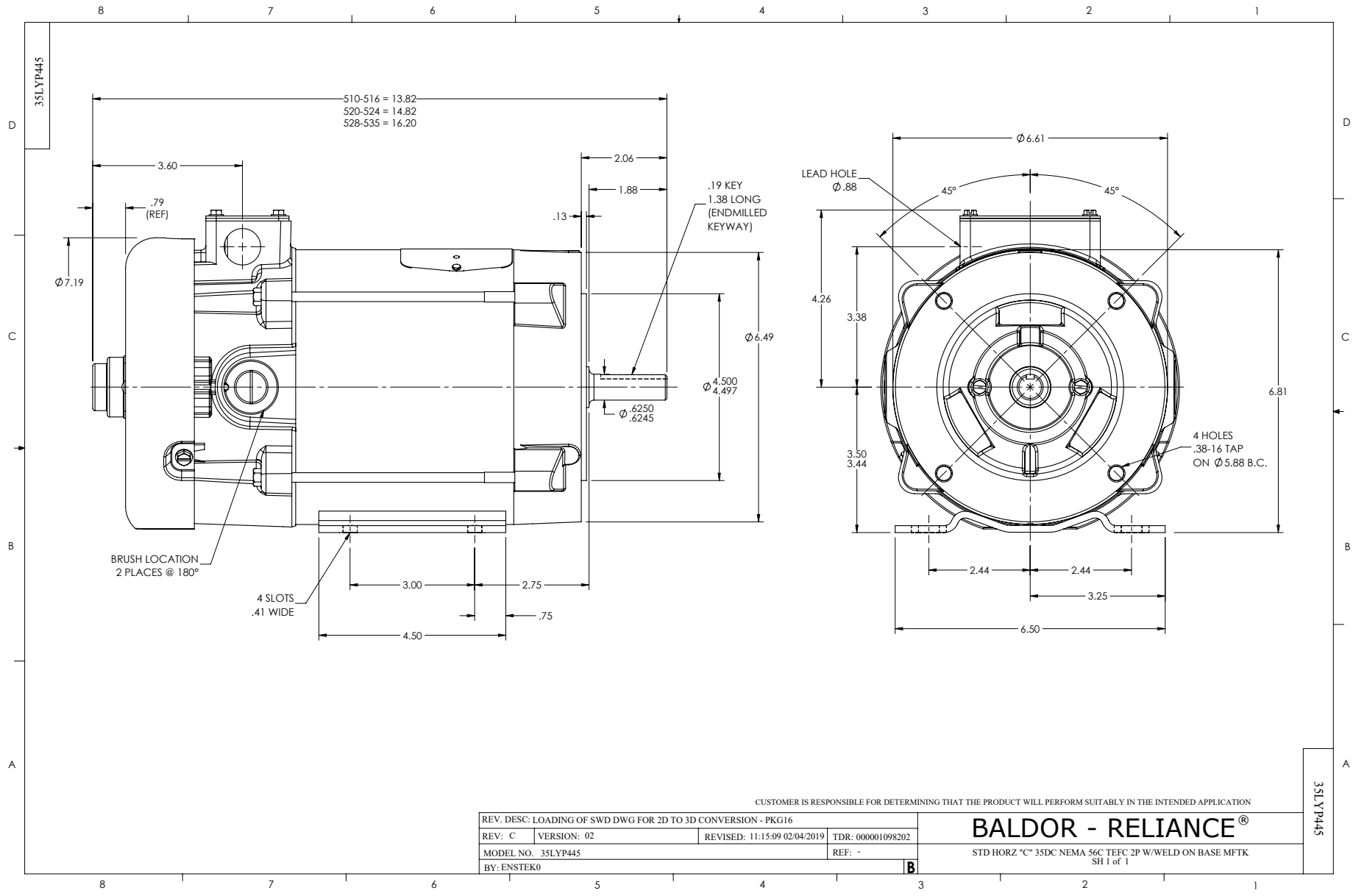
35LYP445
510-516 = 13.82
520-524 = 14.82
528-535 = 16.20
3.60
.79
(REF)
Ø7.19
2.06
1.88
.13
.19 KEY
1.38 LONG
(ENDMILLED
KEYWAY)
Ø6.49
Ø4.500
4.497
Ø.6250
.6245
BRUSH LOCATION
2 PLACES @ 180°
4 SLOTS
.41 WIDE
3.00
2.75
.75
4.50
Ø6.61
LEAD HOLE
Ø.88
45°
45°
4.26
3.38
6.81
3.50
3.44
4 HOLES
.38-16 TAP
ON Ø5.88 B.C.
2.44
2.44
3.25
6.50
CUSTOMER IS RESPONSIBLE FOR DETERMINING THAT THE PRODUCT WILL PERFORM SUITABLY IN THE INTENDED APPLICATION
REV. DESC: LOADING OF SWD DWG FOR 2D TO 3D CONVERSION - PKG16
REV: C
VERSION: 02
REVISED: 11:15:09 02/04/2019
TDR: 000001098202
MODEL NO. 35LYP445
REF: -
BY: ENSTEK0
B
BALDOR - RELIANCE®
STD HORZ "C" 35DC NEMA 56C TEFC 2P W/WELD ON BASE MFTK
SH 1 of 1
35LYP445

CD0860C01

SHUNT WOUND

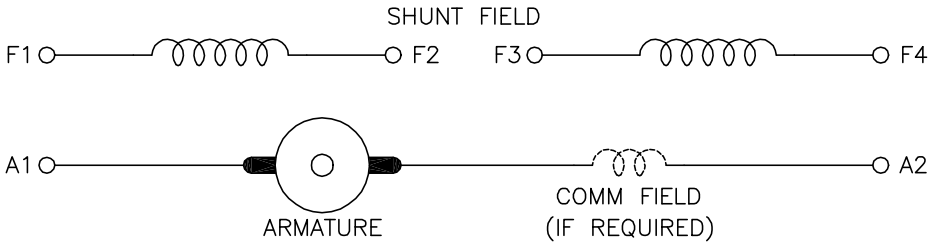

CONNECTION	DIRECTION OF ROTATION			
	CWDE		CCWDE	
	POS TERM (+)	NEG TERM (−)	POS TERM (+)	NEG TERM (−)
HIGH VOLTAGE	A1 F1 CONNECT F2 & F3	A2 F4	A2 F1 CONNECT F2 & F3	A1 F4
LOW VOLTAGE	A1 F1 & F3	A2 F2 & F4	A2 F1 & F3	A1 F2 & F4

NOTES:

1. LIMIT STARTING INRUSH CURRENT TO NOT MORE THAN 3 TIMES RATED AMPERES BY ENERGIZING THE FULL SHUNT FIELD BEFORE BRINGING THE ARMATURE VOLTAGE UP SLOWLY OR IN STEPS.
2. OPTIONAL FIELD REOSTAT MAY BE CONNECTED IN SERIES WITH THE SHUNT FIELD.
3. OPTIONAL THERMOSTAT LEADS ARE MARKED J,J.

CD0860C01

REV. DESC: NEW, REPLACE CD0860			BALDOR ELECTRIC Co.
REV. LTR: –	BY: JLP	REVISED: 15:35:22 11/03/2004	TDR: 347796
CD0860C01		FILE: AAA00121477	REF: CD0860C01
		MTL: –	DC CONNECTION DIAGRAM, SHUNT FIELD, 6 LEAD, DUAL VOLTAGE