12LY-000-210

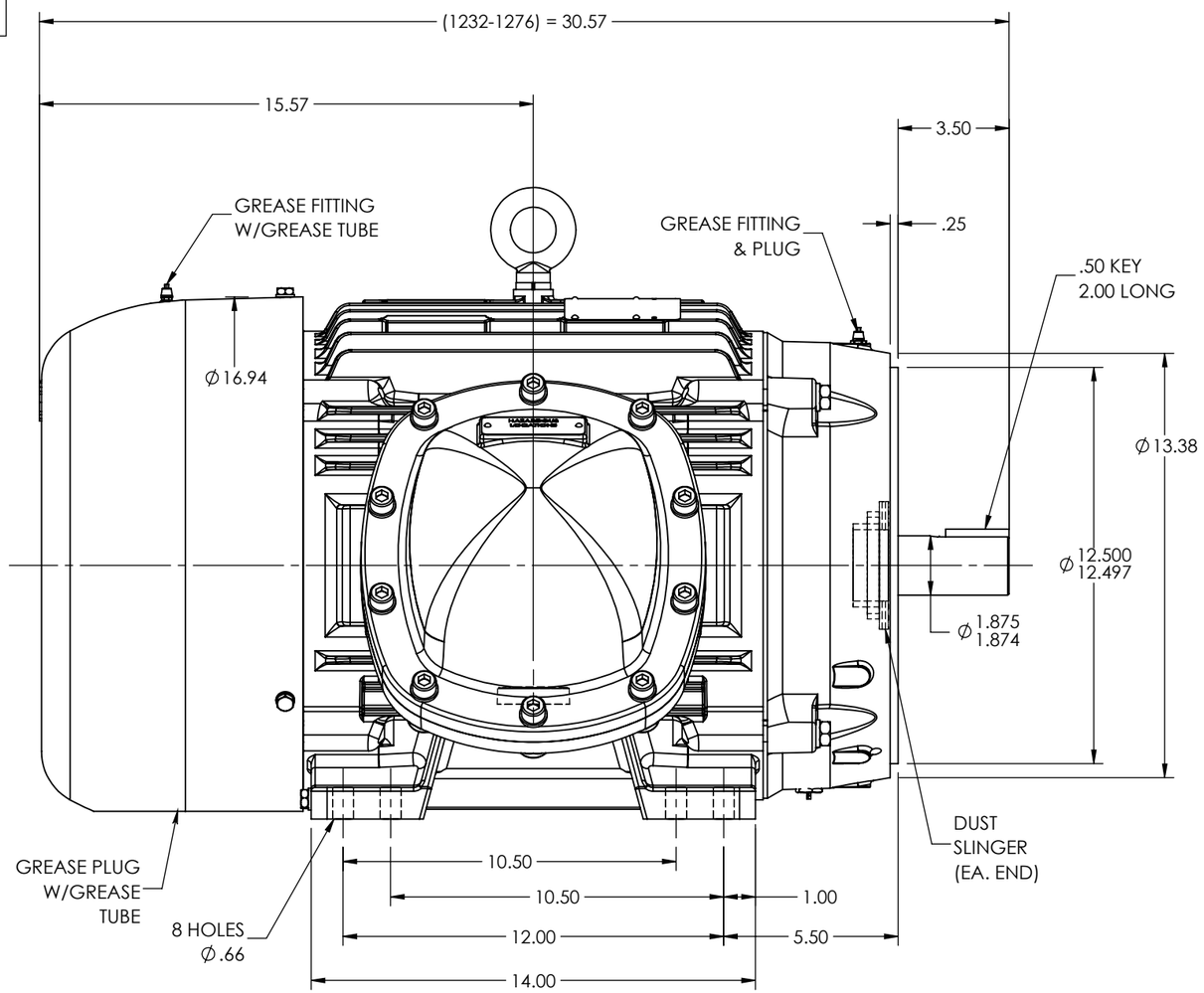

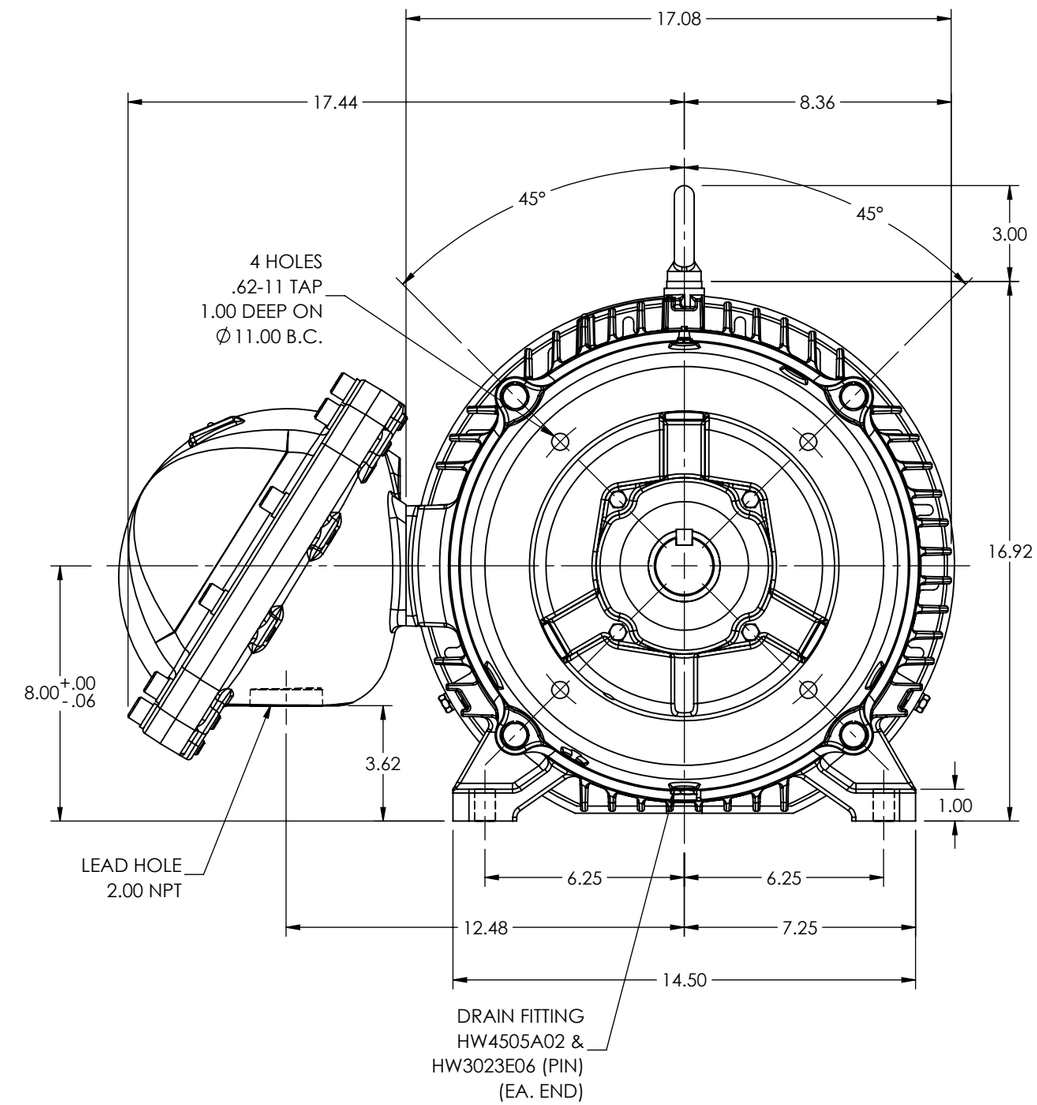

CUSTOMER IS RESPONSIBLE FOR DETERMINING THAT THE PRODUCT WILL PERFORM SUITABLY IN THE INTENDED APPLICATION

REV. DESC: CONVERT AUTOCAD TO SWD DRAWING			
REV: A	VERSION: 01	REVISED: 02:39:05 04/01/2024	TDR: 000001227248
MODEL NO. 12LY-000-210			REF: -
BY: USALMAZ			B

BALDOR - RELIANCE®

HORZ XPFC 324-6TSCY CL.I GP.C&D, CL.II GP. E, F&G,CP FEAT.

12LY-000-210