ABB BALDOR RELIANCE

Customer information packet

C18G2702

2HP, 1720RPM, 1PH, 60HZ, 180TY, TEXP, V1
Class - CLI GP C,D
Division - Division I

Copyright © All product information within this document is subject to ABB Motors and Mechanical Inc. copyright © protection, unless otherwise noted.
11/26/2026 4:15:05 AM

Specifications

Enclosure	XPNV
Frame	180TY
Frame Material	Iron
Haz Area Class and Group	CLI GP C,D
Haz Area Division	Division I
Motor Letter Type	CS
Output @ Frequency	2.000 @ 60 HZ
Phase	1
Voltage @ Frequency	230 V @ 60 HZ
	115 V @ 60 HZ
Agency Approvals	UL
	CSA
	CCSA US
Base Indicator	No Mounting
Bearing Grease Type	Polyrex EM (-20F +300F)
Cable Length	25 FOOT
Current @ Voltage	14.4 A @ 230 V
	28.8 A @ 115 V
Design Code	L
Drip Cover	No Drip Cover
Duty Rating	15 MIN
Haz Area Temp Code	T3C
Heater Indicator	No Heater
Inverter Code	Inverter Ready
KVA Code	K
Lifting Lugs	Vertical Lifting Lugs
Motor Standards	NEMA
Mounting Arrangement	V1
Number of Poles	4
Overall Length	28.00 IN
Product Family	Other
Pulley End Bearing Type	Ball

Part Detail

Revision	A
Type	AC
Mech. spec.	
Base	
Status	INA/A
Elec. spec.	A00007J AL010
Layout	066930-020
Eff. date	03-08-2024
CD Diagram	
Poles	04
Leads	
Proprietary	False
Created date	04-09-2015

Pulley Face Code	P-Base
Service Factor	1.15
Shaft Rotation	Fixed Standard
Shaft Slinger Indicator	No Slinger
Speed Code	Single Speed
Starting Method	Direct on line
Thermal Device - Winding	Normally Closed Thermostat

Nameplate

000613007RC			
CLASS I GROUP	C D X	**NO.**	
CLASS II GROUP	X X X		
OPERATING TEMP CODE	T3C		

000613007MN											
CAT NO				**SPEC NO.**	C18G2702						
HP	2	**AMPS**	28.8/14.4		**VOLTS**	115/230		**DESIGN**		_	
FRAME SIZE	X0180TY		**RPM**	1720	**HZ**	60	**AMB**	40	**SF**	1.15	
D.E. BRG.	50BC02JPP30A			**PH**	1	**DUTY**	15MIN		**INSUL**	F	
O.D.E. BRG.	25BC02JPG30A			**TYPE**	CS	**ENCL**	TENV		**CODE**	K	
				POWER FACTOR					**NEMA-NOM-EFF**		
				MAX CORR KVAR					**GUARANTEED EFFICIENCY**		
						NEMA NOM/CSA QUOTED EFF @			**100% LOAD**		
SER.NO.				**MOTOR WEIGHT**					**LBS.**		
	IP68										
	*15 MIN IN AIR ;SUB. IN										
	SEWAGE / WATER ONLY ONLY;										

000613007MR

CAT NO			**SPEC NO.**	C18G2702							
HP	2	**AMPS**	28.8/14.4		**VOLTS**	115/230		**DESIGN**		_	
FRAME SIZE	X0180TY	**RPM**	1720	**HZ**	60	**AMB**	40	**SF**	1.15		
D.E. BRG.	50BC02JPP30A		**PH**	1	**DUTY**	15MIN		**INSUL**	F		
O.D.E. BRG.	25BC02JPG30A		**TYPE**	CS	**ENCL**	TENV		**CODE**	K		
			POWER FACTOR					**NEMA-NOM-EFF**			
			MAX CORR KVAR					**GUARANTEED EFFICIENCY**			
			NEMA NOM/CSA QUOTED EFF @					**100% LOAD**			
SER.NO.			**MOTOR WEIGHT**					**LBS.**			
	IP68										
	*15 MIN IN AIR ;SUB. IN										
	SEWAGE / WATER ONLY ONLY;										

000692000MB

FINAL CONN AT 230V CW
ROTATION
C18G2702L

REL. S.O.	FRAME	HP	TYPE	PHASE/ HERTZ	RPM	VOLTS
0	182T	2	CS	1/60	1720	115/230

AMPS	DUTY	AMB °C/ INSUL.	S.F.	NEMA DESIGN	CODE LETTER	ENCL.
28.8/14.4	*	40/F	1.15	-	K	SUB

E/S	ROTOR	TEST S.O.	TEST DATE	STATOR RES.@25 °C OHMS (BETWEEN LINES)
781002	418424-50BE	-	-	.86/3.9

PERFORMANCE

LOAD	HP	AMPERES	RPM	INPUT KW	% POWER FACTOR	% EFFI- CIENCY
NO LOAD	0	8.4	1800	.700	36.2	0
1/4	.53	8.7	1770	1.13	56.5	35.0
2/4	1.03	10.2	1754	1.54	65.6	50.0
3/4	1.52	12.1	1735	1.98	71.1	57.2
4/4	2.00	14.4	1720	2.45	73.9	60.9
5/4	2.46	16.9	1691	2.95	75.9	62.2

SPEED TORQUE

	RPM	TORQUE % FULL LOAD	TORQUE LB.-FT.	AMPERES
LOCKED ROTOR	0	306	18.7	69.0
PULL UP	1300	196	12.0	46.0
BREAKDOWN	1500	219	13.4	37.0
FULL LOAD	1720	100	6.11	14.0

AMPERES SHOWN FOR 230. VOLT CONNECTION. IF OTHER VOLTAGE CONNECTIONS ARE AVAILABLE, THE AMPERES WILL VARY INVERSELY WITH THE RATED VOLTAGE

REMARKS: CALCULATED DATA
*15 MIN IN AIR CONT IN LIQUID

BALDOR · DODGE · RELIANCE

DR. BY D. M. BYRD
CK. BY Z. M. WOLFE
APP. BY D. M. BYRD
DATE 07/02/98

A-C MOTOR PERFORMANCE DATA

A00007-JAL010
ISSUE DATE 07/22/09

ABB BALDOR RELIANCE

CUSTOMER INFORMATION PACKET C18G2702 - 2HP, 1720RPM, 1PH, 60HZ, 180TY, TEXP, V1

FRAME 182T	RPM 1720	S.F. 1.15	ROTOR 418424-50BE
HP 2	VOLTS 115/230	NEMA DESIGN -	TEST S.O. CALCULATED DATA
TYPE CS	AMPS 28.8/14.4	CODE LETTER K	TEST DATE -
PHASE/HERTZ 1/60	DUTY *	ENCLOSURE SUB	STATOR RES.@ 25 ℃ .86/3.9
	AMB ℃/INSUL 40/F	E/S 781002	OHMS (BETWEEN LINES)

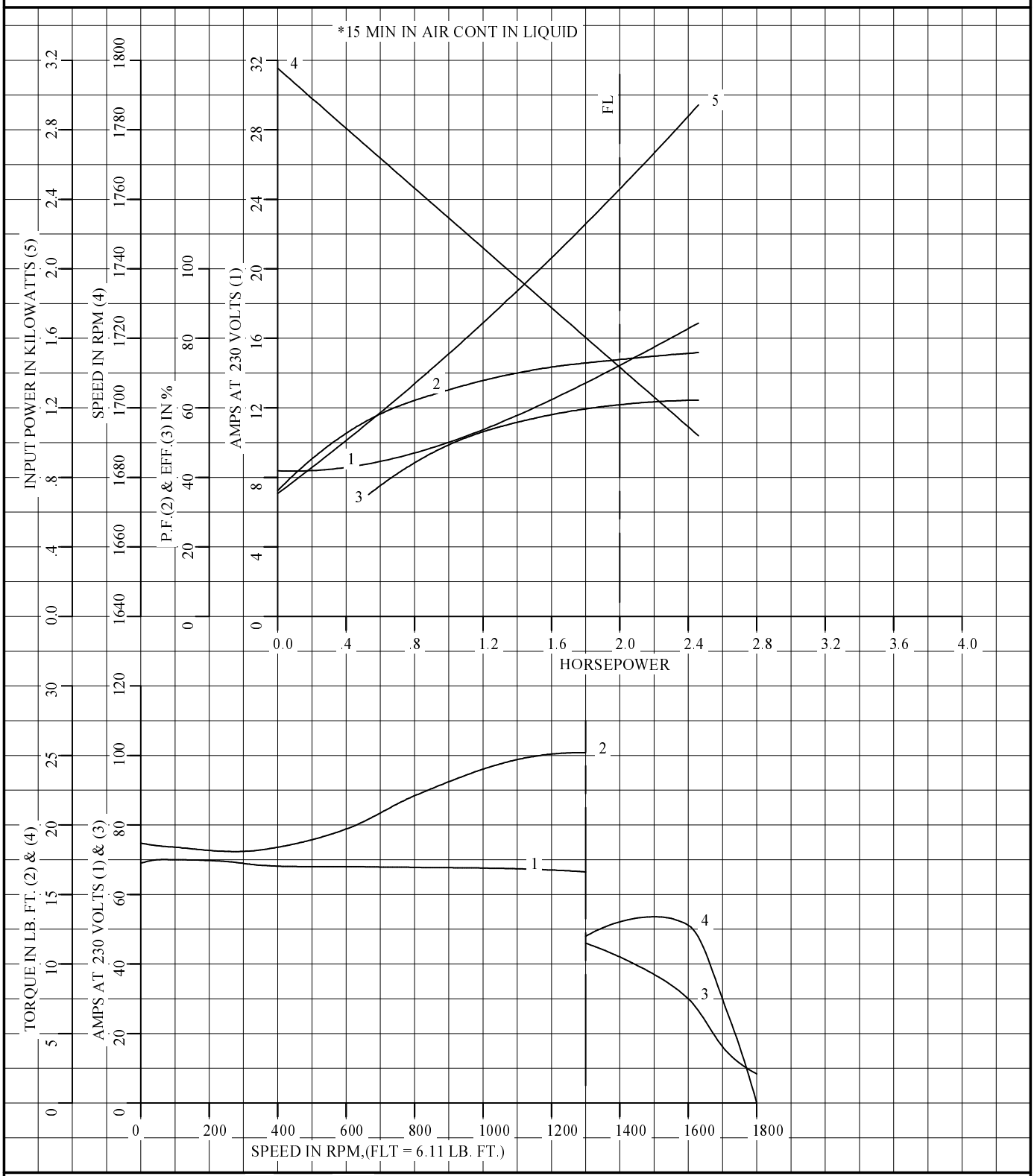

AMPERES SHOWN FOR 230 VOLT CONNECTION, IF OTHER VOLTAGE CONNECTIONS ARE AVAILABLE, THE AMPERES WILL VARY INVERSELY WITH THE RATED VOLTAGE.

BALDOR · DODGE · RELIANCE

DR. BY	D. M. BYRD
CK. BY	Z. M. WOLFE
APP. BY	D. M. BYRD
DATE	07/02/98

A-C MOTOR PERFORMANCE CURVES

A00007-JAL010

ISSUE DATE 07/22/09

066930-020

DUTY MASTER ALTERNATING CURRENT MOTORS

SQUIRREL-CAGE INDUCTION
ENCLOSURE: TOTALLY ENCLOSED
SUBMERSIBLE
ONE SIZE SMALLER FLANGE AND SHAFT
FRAMES 180TY THRU 210TY

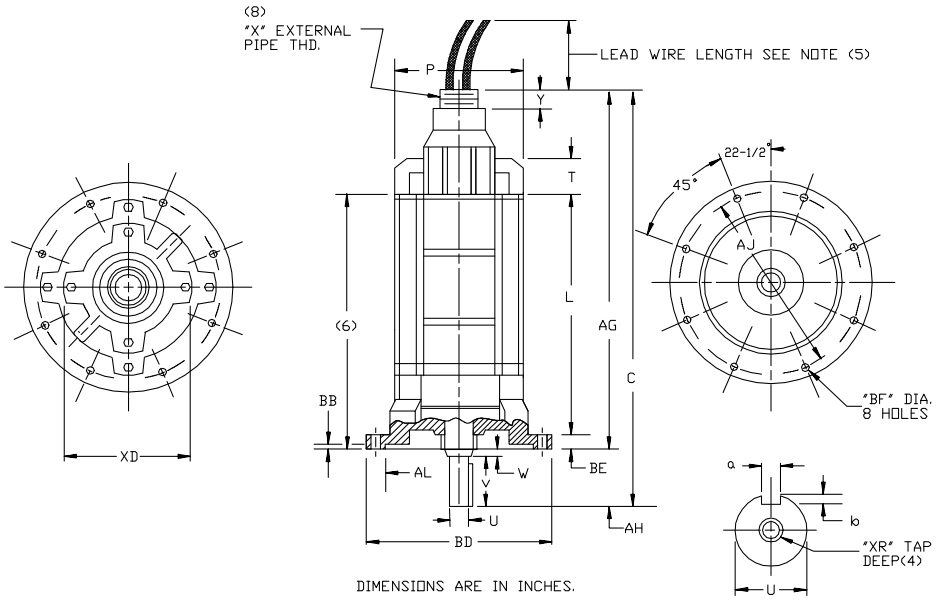

DIMENSIONS ARE IN INCHES.

FRAME	C	L	P	T	U(3)	V	W	AG	AH	AJ	AL(7)
180TY	25.94	16.50	9.62	2.25	.8750	1.25	.31	24.38	1.56	10.00	9.125
210TY	32.41	21.12	11.50	2.25	1.2500	2.00	.28	30.12	2.28	11.50	10.625
(1)											

FRAME	BD(2)	BE	BF	XR(4)	LEAD CONNECTION			BB	B.E. KEYWAY			WEIGHT
					X	Y	XD		a	b	LENGTH	
180TY	11.062	.75	.44	3/8-16	2-1/2-8	1.25	6.75	.12	.187	.09	1.12	200
210TY	12.375	.75	.56	1/2-13	2-1/2-8	1.25	7.75	.12	.250	.12	1.12	315
(1)												

(1) SPECIAL DIMENSIONS ON THIS LINE.

(2) "BD" VARIES ± .010

(3) "U" VARIES +.0000, -.0005

(4) TAP DEPTH ON 180TY THRU 210TY IS 1.38

(5) LEAD WIRE LENGTH AS SPECIFIED ON CERTIFICATION

(6) MINIMUM SUBMERGED DEPTH.

(7) "AL" VARIES +.004, -.000
FACE RUNOUT AND ECCENTRICITY .008 MAX. T.I.R.
PROTECTIVE CONDUIT FURNISHED BY CUSTOMER.

(8) 3" - 8 PIPE THREAD SUPPLIED WITH CABLE SIZES NO. 4 AND LARGER.

CUSTOMER IS RESPONSIBLE FOR DETERMINING THAT BALDOR'S PRODUCT WILL PERFORM SUITABLY IN THE INTENDED APPLICATION.

BALDOR

DIM SHT;180TY THRU 210TY;SUBMERSIBLE;1 SIZE SMALLER FLG/SH
SH 1 of 1

REV. DESC: LOAD TO BUS	VERSION: 00	TDR: 000000925374
REV. LTR: -	REVISED: 08:11:59 05/14/2015	BY: RGGWT
FILE: \RGG\00025\093		
MTL: -		

066930-020