ABB BALDOR RELIANCE

Customer information packet

BSM90N-275AA

BSM90N-275AA (NEO) T'STAT, RESOLVE

Copyright © All product information within this document is subject to ABB Motors and Mechanical Inc. copyright © protection, unless otherwise noted.
11/27/2026 11:50:25 PM

Specifications

Enclosure	TENV
Motor Type	S332B
Nameplate Speed	4000
Agency Approvals	CE
	CSA
	TUV
	UR
	WEEE
Base Indicator	Bracket Mounted
Dimensional Drawing Numbers	S3LYP100
Frame	D130D
Frame Material	Exposed Laminations
Motor Lead Quantity/Wire Size	3 @ 14 AWG
Motor Standards	IEC
Mounting Arrangement	F1
Nameplate Output	2.59KW
Shaft Rotation	Reversible

Part Detail

Revision	AG
Type	AC
Mech. spec.	S3P100
Base	
Status	PRD/A
Elec. spec.	S3WGW060
Layout	S3LYP100
Eff. date	07-29-2025
CD Diagram	CD0006A02
Poles	08
Leads	3#14
Proprietary	False
Created date	01-01-0001

Nameplate

NP2863L					
CAT.NO.					
SPEC.	S3P100W060G1				
MFG.NO.					
TORQ CONT STALL	10 NM				
CUR CONT STALL/A RMS	11.6				
POWER	2.59KW				
RATED SPEED/RPM(1/MIN)	4000				
RATED BUS VOLTS	300				
PEAK CUR/A RMS	41.9				
MAX SPEED/RPM(1/MIN)	7000				
IP	54	**IC**	410	**WT.**	14.5
CLASS	F	**25C RATED**			

Accessories

Part number	Description	Multiplier
GBSM90-MRP120-4	Std. Servo Gearbox Ratio 4:1	E4
GBSM90-MRP120-5	Std. Servo Gearbox Ratio 5:1	E4
GBSM90-MRP120-7	Std. Servo Gearbox Ratio 7:1	E4
GBSM90-MRP155-10	Std. Servo Gearbox Ratio 10:1	E4
GBSM90-MRP155-25	Std. Servo Gearbox Ratio 25:1	E4

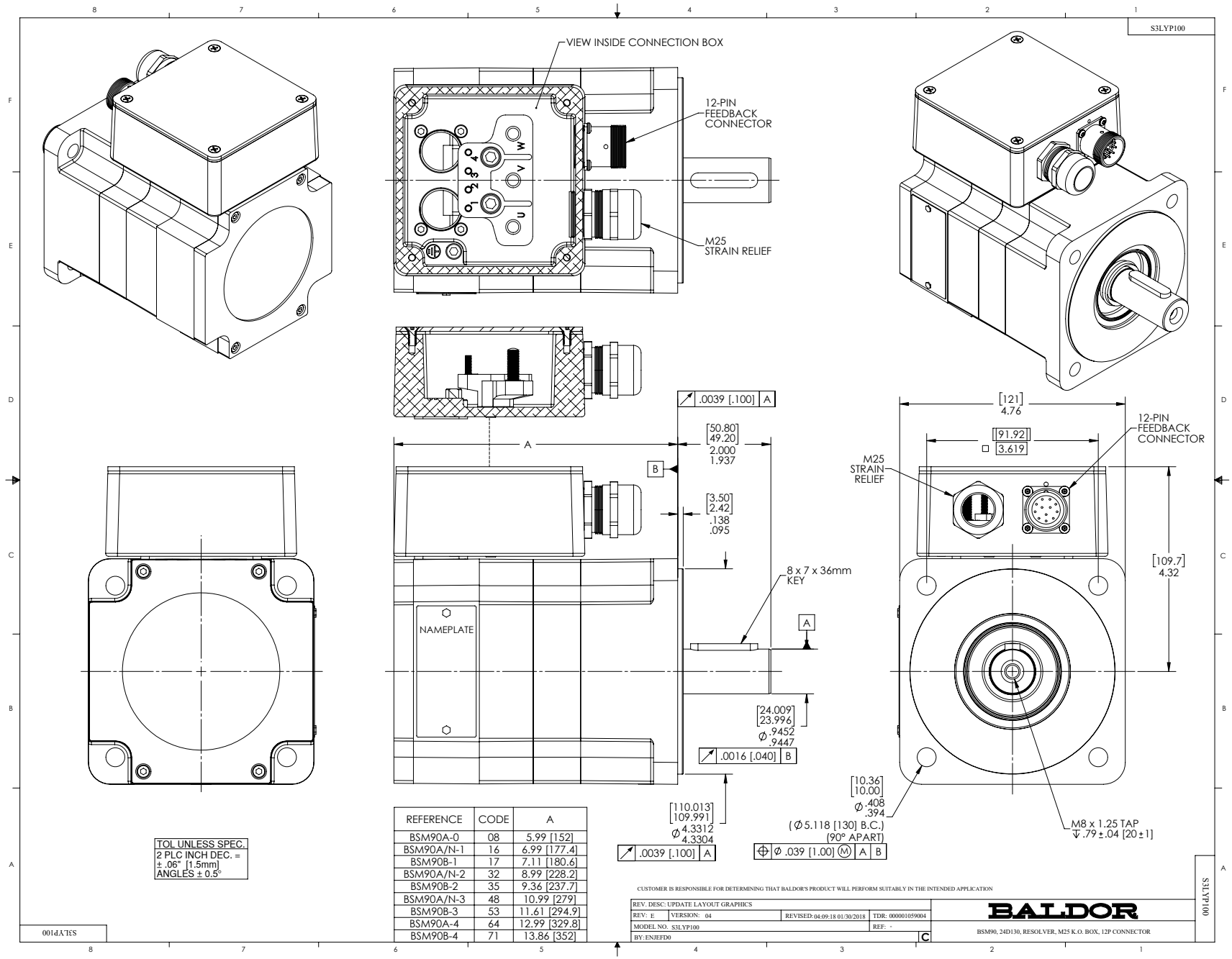

REFERENCE	CODE	A
BSM90A-0	08	5.99 [152]
BSM90A/N-1	16	6.99 [177.4]
BSM90B-1	17	7.11 [180.6]
BSM90A/N-2	32	8.99 [228.2]
BSM90B-2	35	9.36 [237.7]
BSM90A/N-3	48	10.99 [279]
BSM90B-3	53	11.61 [294.9]
BSM90A-4	64	12.99 [329.8]
BSM90B-4	71	13.86 [352]

CD1404

MOTOR CONNECTIONS

TERMINAL LABEL	FUNCTION	INTERNAL WIRE MARKING
1	THERMAL SWITCH	YELLOW
2	THERMAL SWITCH	YELLOW
3	BRAKE (OPTIONAL)	BLACK
4	BRAKE (OPTIONAL)	BLACK
⏚	GROUND	-----
U	PHASE U	T1
V	PHASE V	T2
W	PHASE W	T3



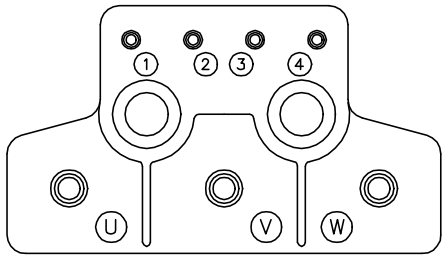

RESOLVER CONNECTIONS

PIN	FUNCTION	INTERNAL WIRE COLOR
1	REF HI R1	RED/WHITE
2	REF LO R2	YELLOW/WHITE (or) BLACK/WHITE
3	COS+ S1	RED
4	COS− S3	BLACK
5	SINE+ S2	BLUE
6	SINE− S4	YELLOW

12 PIN THREADED CONNECTOR
(INSERTION SIDE)

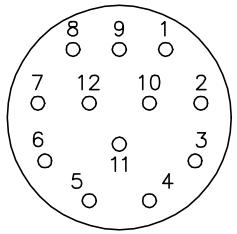

NOTE:

IF NO FEEDBACK, OMIT RESOLVER CONNECTIONS.

CD1404

REV. DESC: ADDED OPTIONAL BLACK/WHITE COLOR TO REF−LO−R2		BALDOR - RELIANCE®
REV. LTR: B	VERSION: 01	TDR: 000001151947
FILE: \AAA\00065\150	REVISED: 01:18:21 10/27/2020	BY: ENJEFDO
MTL: −		CONN. DIAG.−BSM,RESOLVER,BRAKE,TERMINAL BLOCK,12 PIN CONN
		SH 1 of 1

CD0006A02

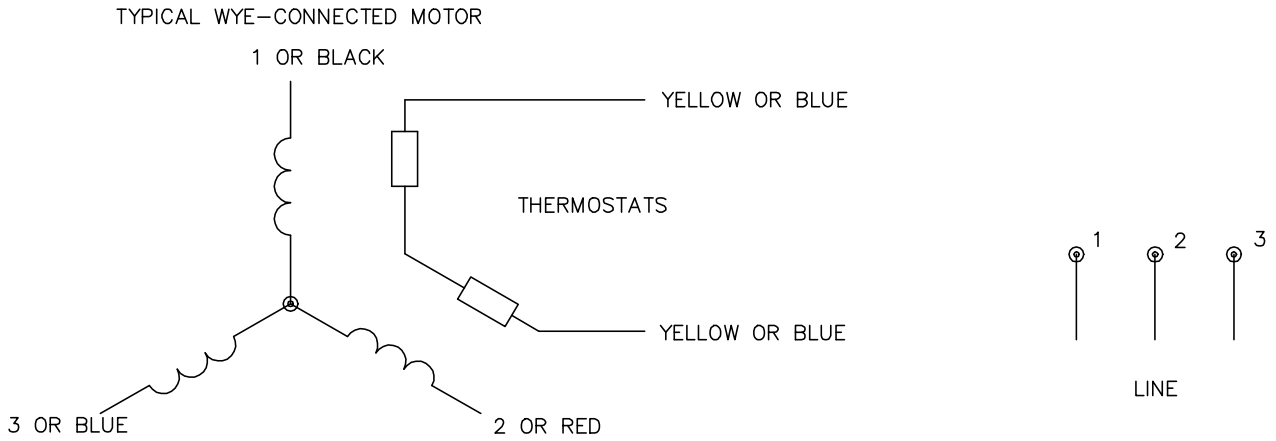

NOTES:

1. INTERCHANGE ANY TWO LINE LEADS TO REVERSE ROTATION.
2. ACTUAL NUMBER OF INTERNAL PARALLEL CIRCUITS MAY VARY.

REV. DESC: REMOVED "OPTIONAL" FROM PRINT, SERVO REQ'S T'STATS			BALDOR ELECTRIC Co.
REV. LTR: D	VERSION: 03	TDR: 000000414937	
CD0006A02	FILE: \AAA\00068\606	REVISED: 10:02:28 11/21/2006	3PH, SV, 3 LEADS, WYE CONNECTED
	MTL: –	BY: ENJEFDO	

CD0006A02