ABB BALDOR RELIANCE

Customer information packet

BSM90C-3250AF

BSM90C-3250AF T'STAT, ENCODER

Copyright © All product information within this document is subject to ABB Motors and Mechanical Inc. copyright © protection, unless otherwise noted.
11/25/2026 7:33:40 AM

Specifications

Enclosure	TENV
Nameplate Speed	1200
Agency Approvals	CE
	CSA
	TUV
	UR
Base Indicator	Bracket Mounted
Dimensional Drawing Numbers	S3LYP193
Frame	D130D
Frame Material	Exposed Laminations
Motor Lead Quantity/Wire Size	3 @ 16 AWG
Motor Standards	IEC
Mounting Arrangement	F1
Nameplate Output	0.98KW
Shaft Rotation	Reversible

Part Detail

Revision	AN
Type	AC
Mech. spec.	S3P193
Base	
Status	PRD/A
Elec. spec.	S3WGW083
Layout	S3LYP193
Eff. date	10-15-2025
CD Diagram	CD0006A02
Poles	08
Leads	3#16
Proprietary	False
Created date	01-01-0001

Nameplate

NP2863L					
CAT.NO.					
SPEC.	S3P193W083				
MFG.NO.					
TORQ CONT STALL	7.8 NM				
CUR CONT STALL/A RMS	3.46				
POWER	0.98KW				
RATED SPEED/RPM(1/MIN)	1200				
RATED BUS VOLTS	320				
PEAK CUR/A RMS	10.4				
MAX SPEED/RPM(1/MIN)	6000				
IP	54	**IC**	410	**WT.**	15.8
CLASS	F	**25C RATED**			

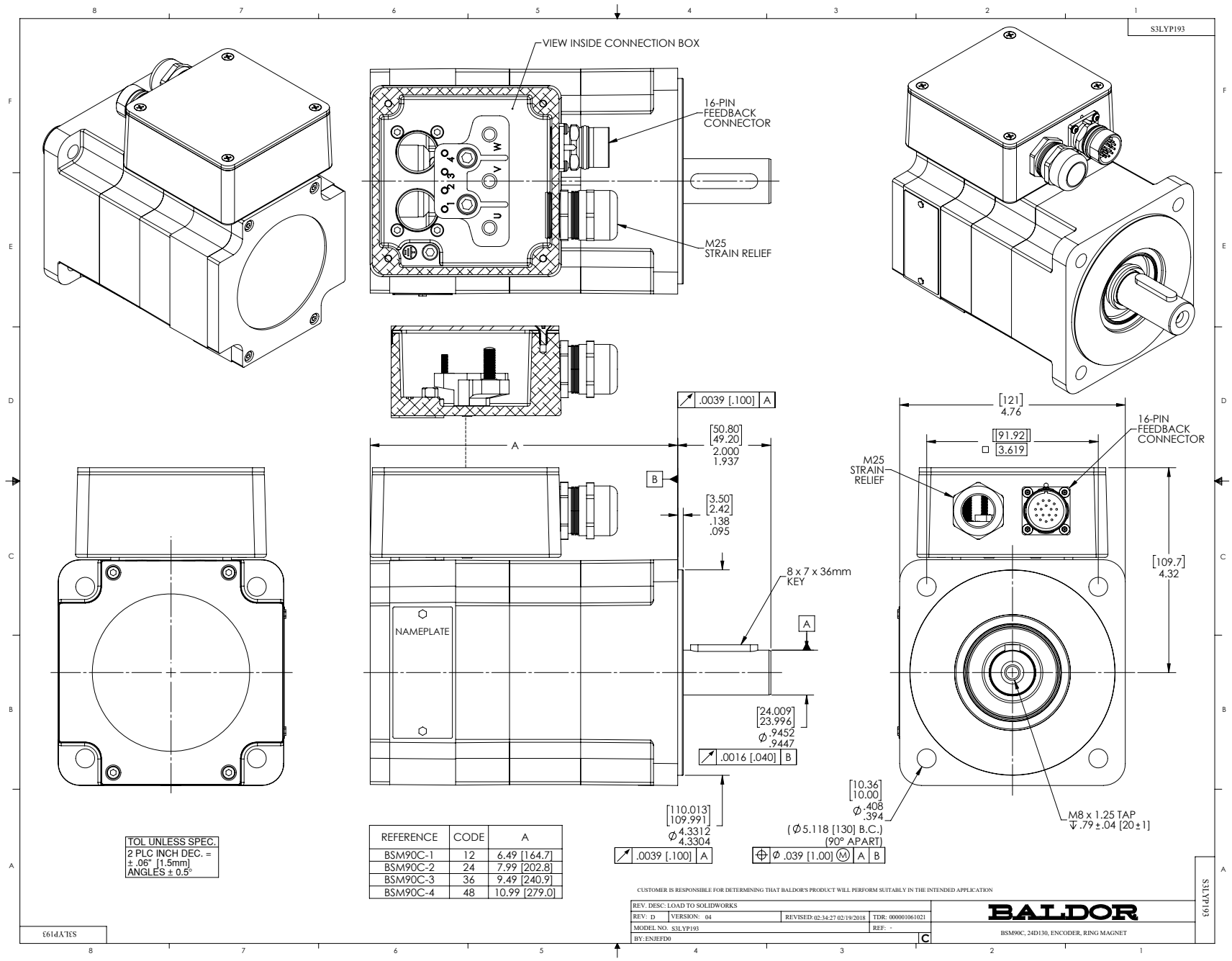

REFERENCE	CODE	A
BSM90C-1	12	6.49 [164.7]
BSM90C-2	24	7.99 [202.8]
BSM90C-3	36	9.49 [240.9]
BSM90C-4	48	10.99 [279.0]

CD1338A01

BRUSHLESS D.C. COMMUTATION

8 POLE MECHANICAL DEGREES	0	15	30	45	60	75	90	105	120	135	150	165	180
4 POLE MECHANICAL DEGREES	0	30	60	90	120	150	180	210	240	270	300	330	360
ELECTRICAL DEGREES	0	60	120	180	240	300	360	420	480	540	600	660	720

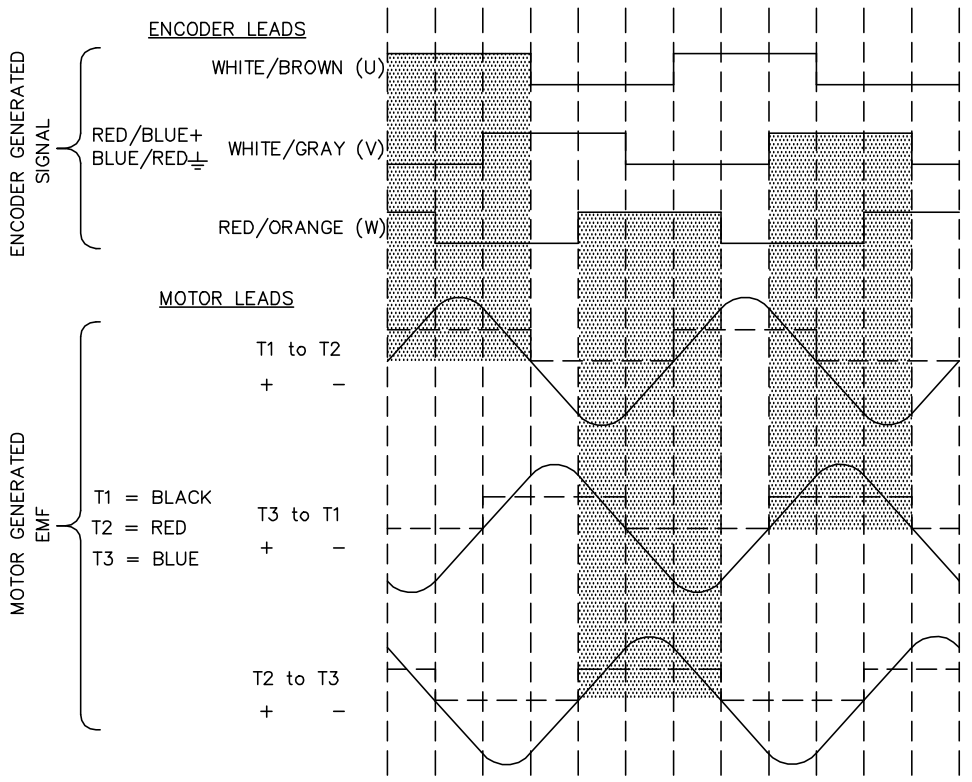

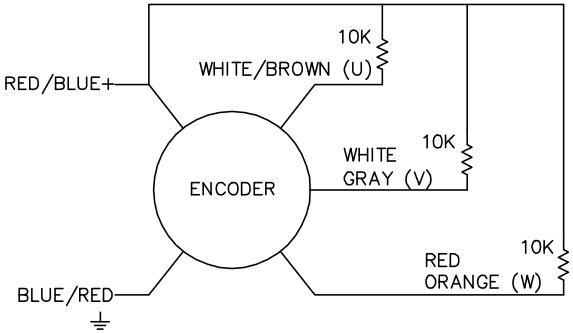

NOTE:
CCW ROTATION VIEWING
MOTOR SHAFT END

CD1338A01

REV. DESC: NEW			BALDOR ELECTRIC Co.
REV. LTR: –	BY: FN	REVISED: 11:22:25 03/24/2004	TDR: 328266
CD1338A01		FILE: AAA00115153	REF: CD1338A01
		MTL: –	BLDC COMMUTATION KOYO ENC.(CHANNELS TO MATCH TMGW/SUMTAK)

CD1388A02

MOTOR CONNECTIONS

TERMINAL LABEL	FUNCTION	INTERNAL WIRE MARKING
1	THERMAL SWITCH	YELLOW
2	THERMAL SWITCH	YELLOW
3	✳BRAKE	BLACK
4	✳BRAKE	BLACK
⏚	GROUND	-----
U	PHASE U	BLACK OR T1
V	PHASE V	RED OR T2
W	PHASE W	BLUE OR T3

✳ WHEN REQUIRED



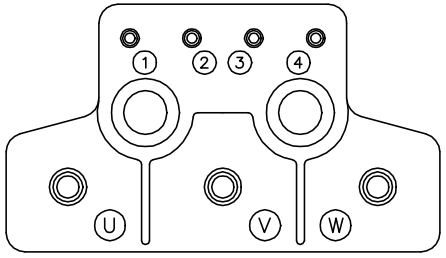

PIN	FUNCTION	WIRE COLOR
1	DC+5V	RED/BLUE
2	GROUND	BLUE/RED
3	CHANNEL A	BLUE
4	CHANNEL $\overline{A}$	ORANGE
5	CHANNEL B	GREEN
6	CHANNEL $\overline{B}$	BROWN
7	CHANNEL Z	BLACK
8	CHANNEL $\overline{Z}$	YELLOW
9	OPEN	---
10	CHANNEL U	WHITE/BROWN
11	CHANNEL $\overline{U}$	BROWN/WHITE
12	CHANNEL V	WHITE/GRAY
13	CHANNEL $\overline{V}$	GRAY/WHITE
14	CHANNEL W	RED/ORANGE
15	CHANNEL $\overline{W}$	ORANGE/RED
16	OPEN	---

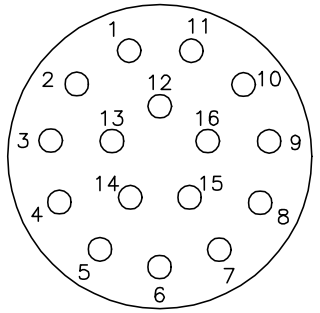

16 PIN CONNECTOR
THREADED CRIMP PIN STYLE
16– #20 CONTACT SIZE
(CRIMP SIDE)

CD1388A02

REV. DESC: NEW			
REV. LTR: –	BY: FN	REVISED: 10:20:15 03/25/2004	TDR: 328341
CD1388A02		FILE: AAA00115200	REF: CD1388A02
		MTL: –	

BALDOR ELECTRIC Co.

CONN DIAG KOYO ENCODER C/T, K.O. BOX & 16 PIN CONNECTOR

CD0006A02

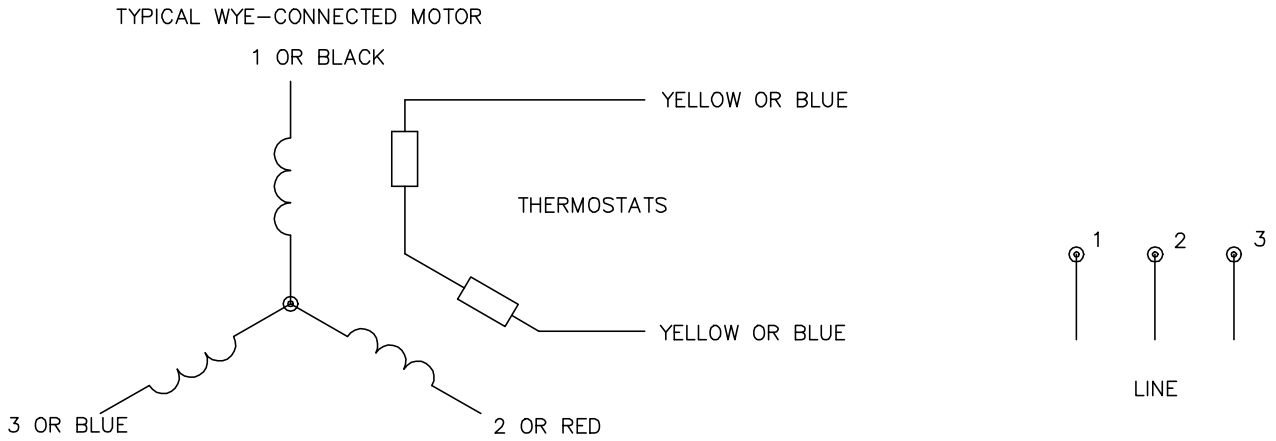

NOTES:

1. INTERCHANGE ANY TWO LINE LEADS TO REVERSE ROTATION.
2. ACTUAL NUMBER OF INTERNAL PARALLEL CIRCUITS MAY VARY.

REV. DESC: REMOVED "OPTIONAL" FROM PRINT, SERVO REQ'S T'STATS			BALDOR ELECTRIC Co.
REV. LTR: D	VERSION: 03	TDR: 000000414937	
CD0006A02	FILE: \AAA\00068\606	REVISED: 10:02:28 11/21/2006	3PH, SV, 3 LEADS, WYE CONNECTED
	MTL: –	BY: ENJEFDO	

CD0006A02