S5LYP037

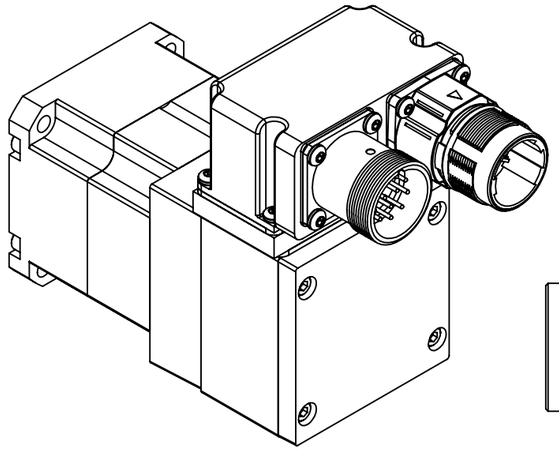

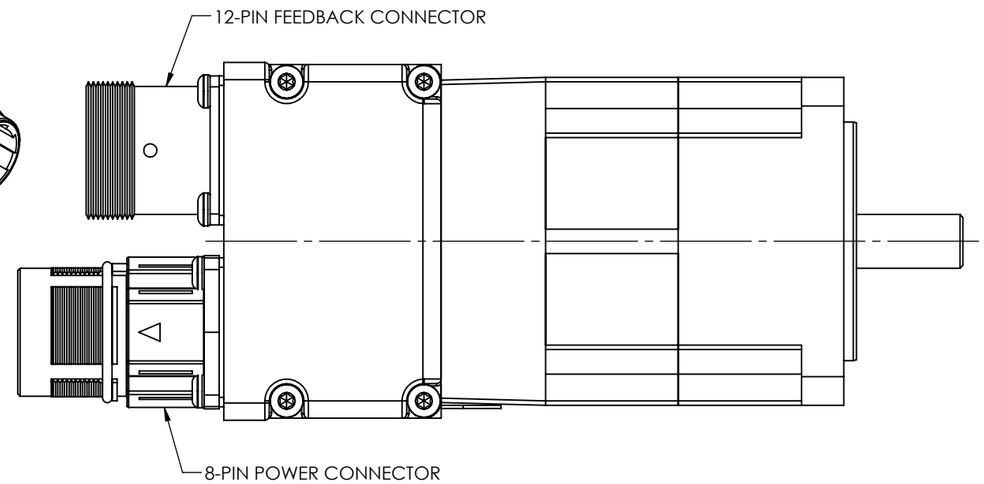

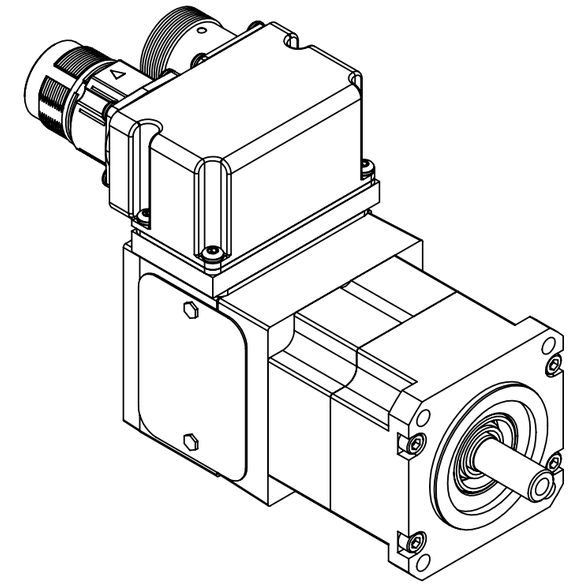

REF	CODE	A
BSM50A/N-1	07	4.00 [101.7]
BSM50A/N-2	15	5.00 [127.1]
BSM50A/N-3	23	6.00 [152.5]

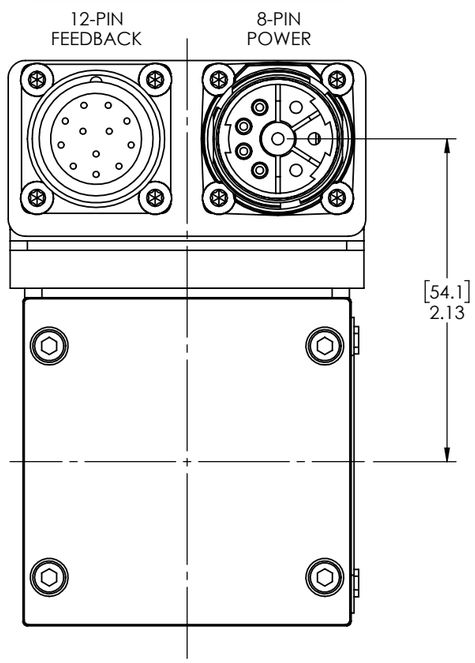

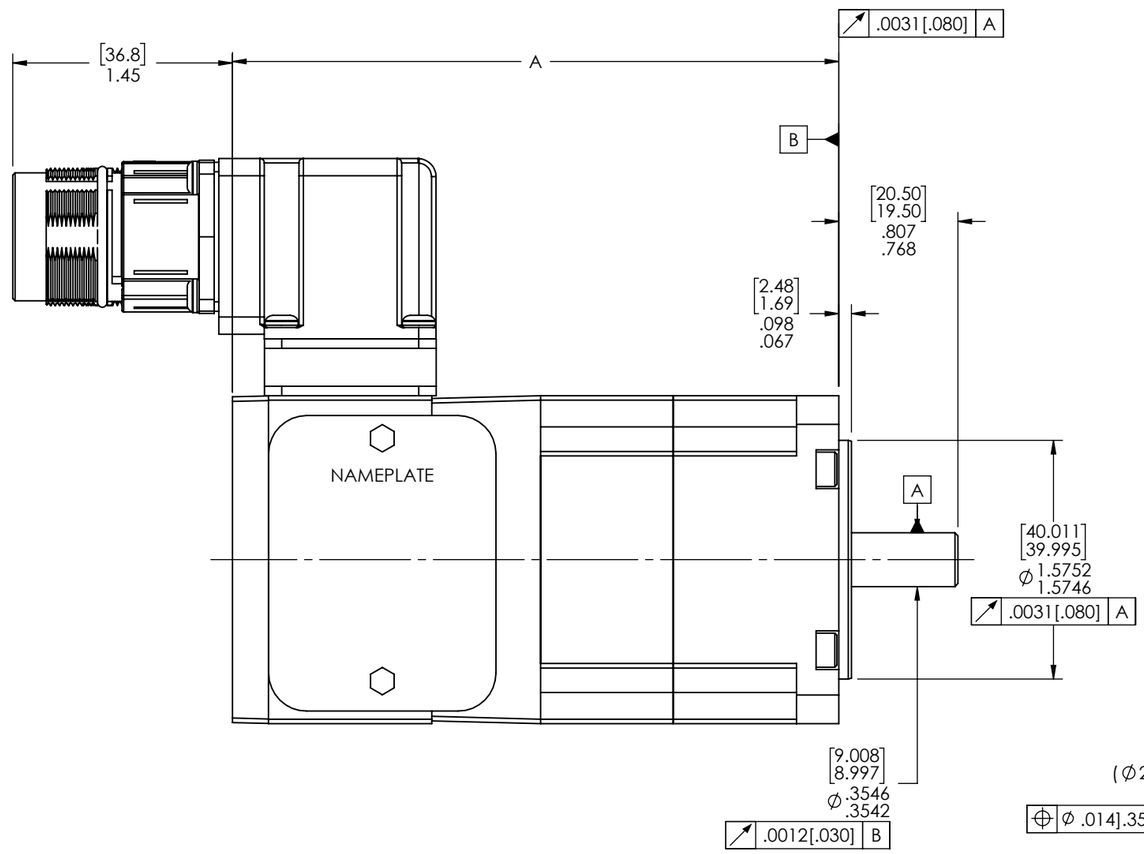

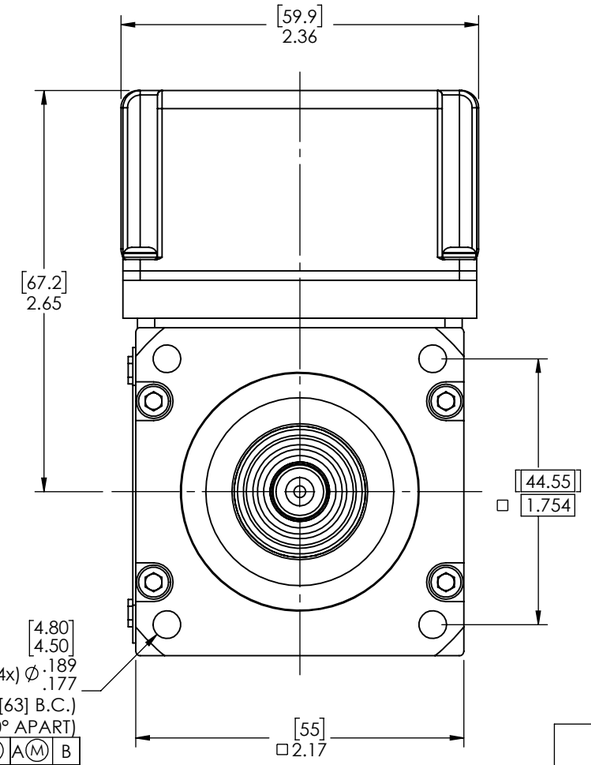

TOL UNLESS SPEC.
2 PLC INCH DEC. = ± .06" [1.5mm] ANGLES ± 0.5°

CUSTOMER IS RESPONSIBLE FOR DETERMINING THAT BALDOR'S PRODUCT WILL PERFORM SUITABLY IN THE INTENDED APPLICATION

REV. DESC: UPDATE LAYOUT GRAPHICS			
REV: E	VERSION: 04	REVISED: 04:39:56 01/30/2018	TDR: 000001059004
MODEL NO. S5LYP037			REF: -
BY: ENJEFD0			B

BALDOR

BSM50, RESOLVER & METRIC CONNECTORS FACING ODE

S5LYP037