BRUSHLESS D.C. COMMUTATION

8 POLE MECHANICAL DEGREES	0	15	30	45	60	75	90	105	120	135	150	165	180
4 POLE MECHANICAL DEGREES	0	30	60	90	120	150	180	210	240	270	300	330	360
ELECTRICAL DEGREES	0	60	120	180	240	300	360	420	480	540	600	660	720

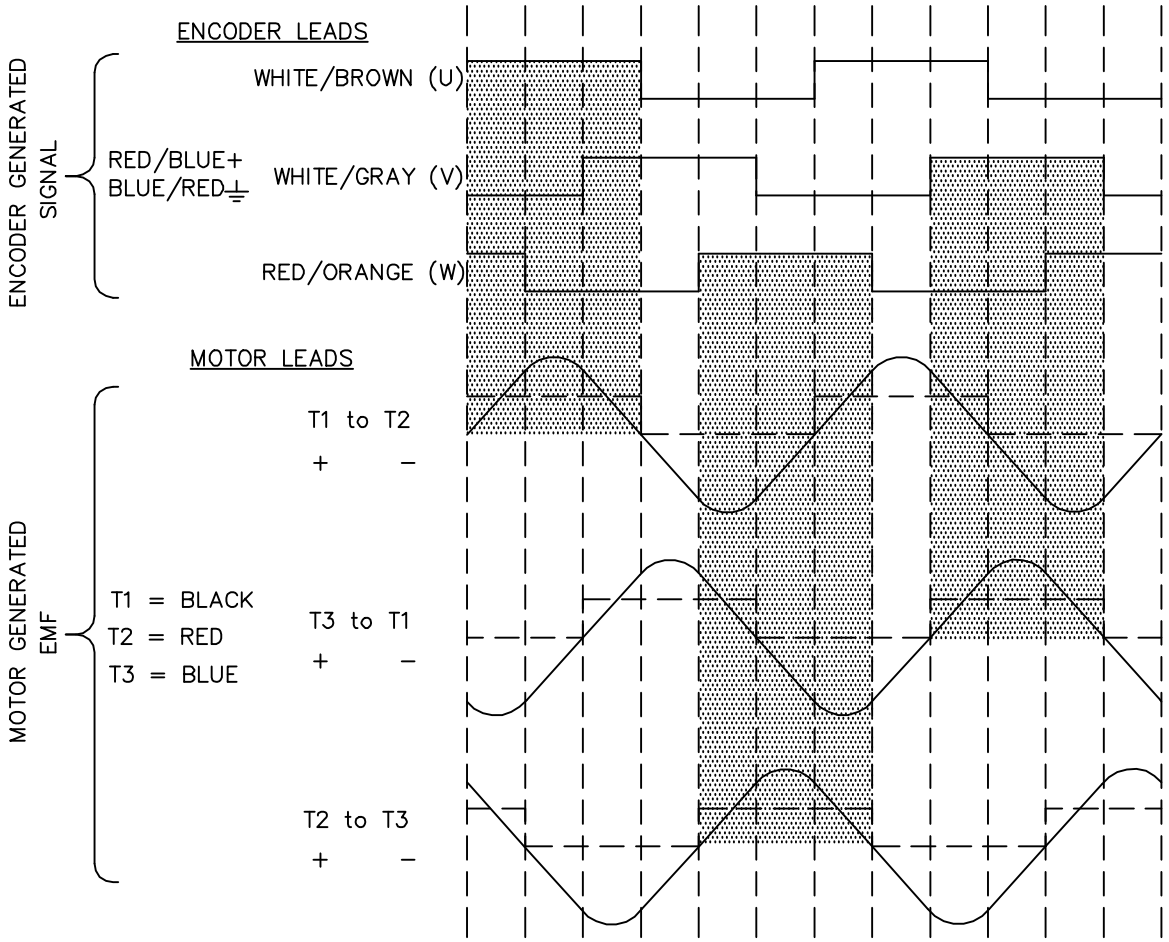

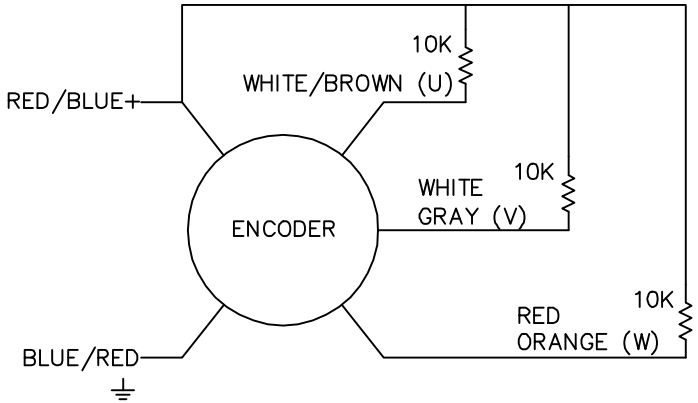

NOTE:

CCW ROTATION VIEWING
MOTOR SHAFT END

REV. DESC: NEW			
REV. LTR: –	BY: FN	REVISED: 11:22:25 03/24/2004	TDR: 328266
CD1338A01		FILE: AAA00115153	REF: CD1338A01
		MTL: –	

BALDOR ELECTRIC Co.

BLDC COMMUTATION KOYO ENC.(CHANNELS TO MATCH TMGW/SUMTAK)

CD1338A01