34LYK054

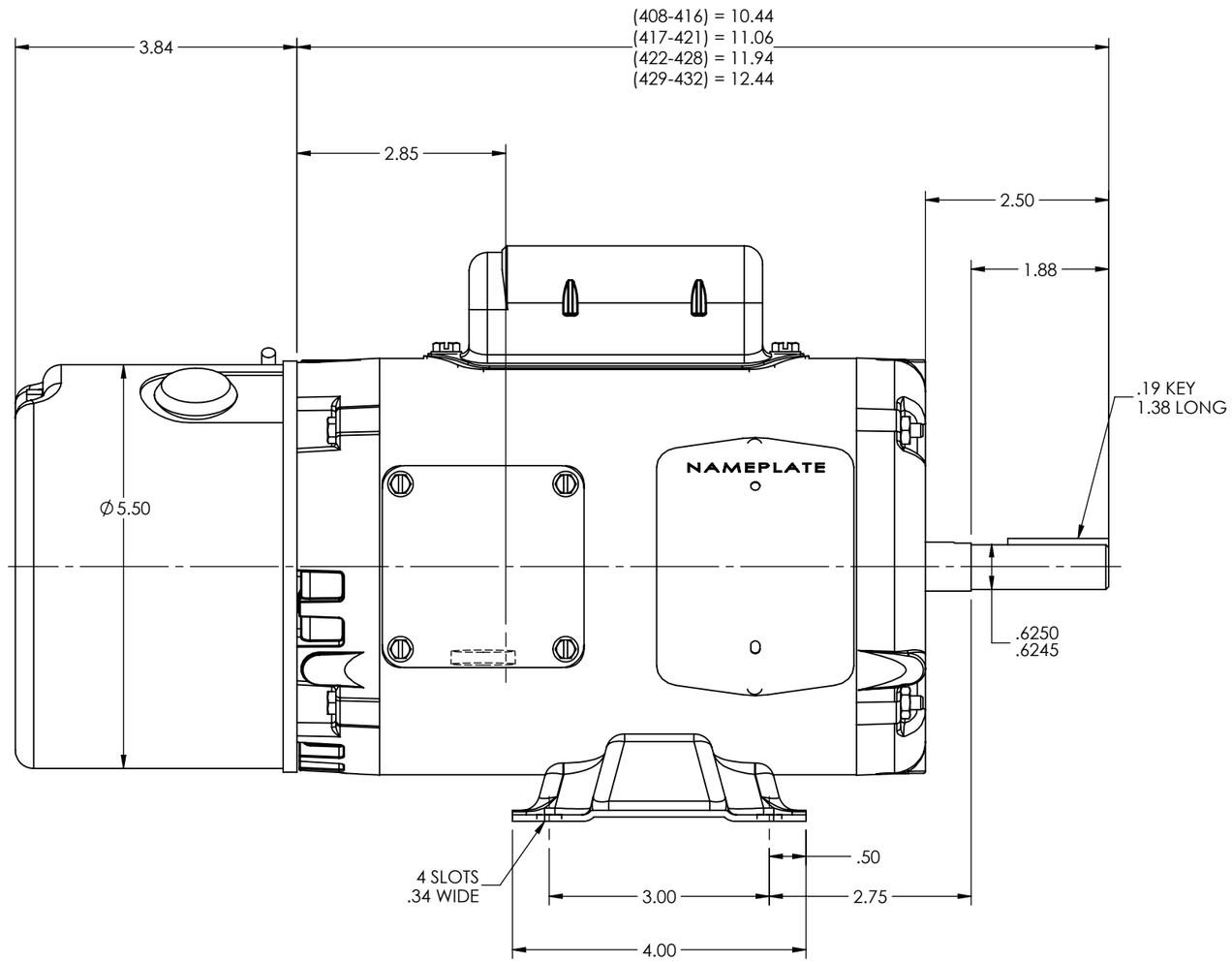

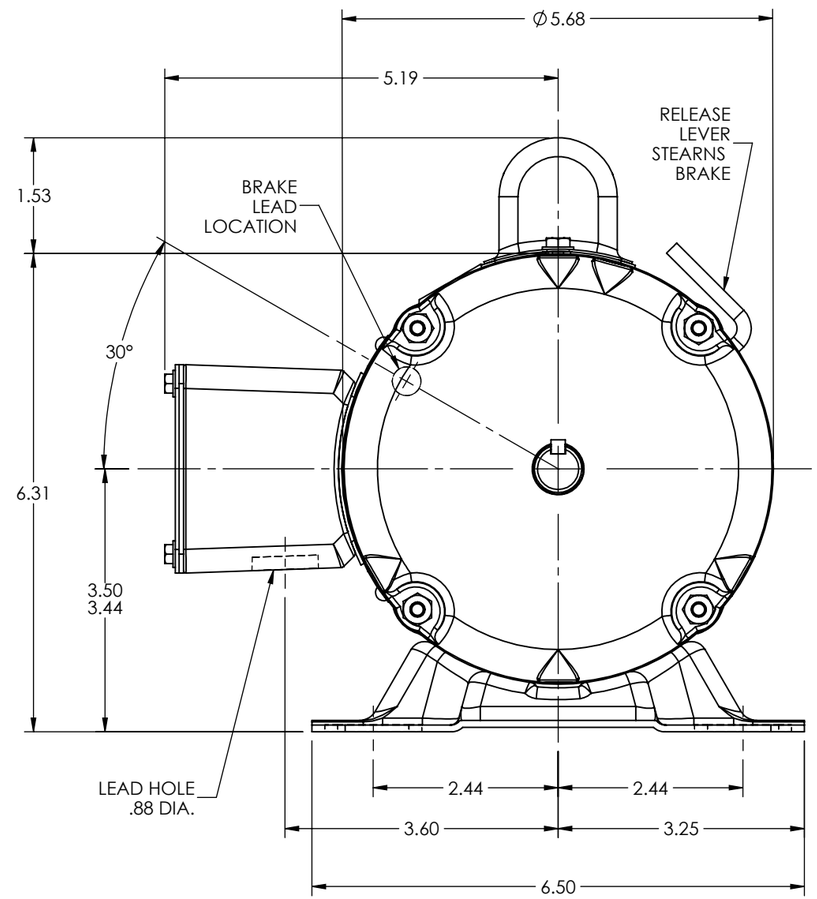

34LYK054

CUSTOMER IS RESPONSIBLE FOR DETERMINING THAT BALDOR'S PRODUCT WILL PERFORM SUITABLY IN THE INTENDED APPLICATION

REV. DESC: CONVERT STOCK LAYOUTS FROM AUTOCAD TO SWD			
REV: D	VERSION: 02	REVISED: 03:06:02 12/05/2023	TDR: 000001220227
MODEL NO. 34LYK054			REF: -
BY: USALMAZ			B

BALDOR

STD HORZ MODEL 34L NEMA 56 TENV W/INTERNALLY CONNECTED BRAKE

34LYK054