ABB BALDOR RELIANCE

Customer information packet

AOM3539

.5HP, 1140RPM, 3PH, 60HZ, 56, 3418M, TEAO, F1, N
Class - None
Division - Not Applicable

Copyright © All product information within this document is subject to ABB Motors and Mechanical Inc. copyright © protection, unless otherwise noted.
11/23/2026 2:44:34 AM

Specifications

Enclosure	TEAO
Frame	56
Frame Material	Steel
Frequency	60.00 Hz
Haz Area Class and Group	None
Haz Area Division	Not Applicable
Motor Letter Type	Three Phase
Output @ Frequency	.500 HP @ 60 HZ
Phase	3
Synchronous Speed @ Frequency	1200 RPM @ 60 HZ
Voltage @ Frequency	208.0 V @ 60 HZ
	230.0 V @ 60 HZ
	460.0 V @ 60 HZ
Agency Approvals	CSA
	UR
Ambient Temperature	40 °C
Auxiliary Box	NO AUXILLARY BOX
Auxiliary Box Lead Termination	None
Base Indicator	Rigid
Bearing Grease Type	Polyrex EM (-20F +300F)
Blower	None
Current @ Voltage	2.700 A @ 208.0 V
	2.500 A @ 208.0 V
	2.400 A @ 230.0 V
	1.200 A @ 460.0 V
Design Code	B
Drip Cover	No Drip Cover
Duty Rating	CONT
Efficiency @ 100% Load	72.0 %
Electrically Isolated Bearing	Not Electrically Isolated
Feedback Device	NO FEEDBACK
Front Face Code	Standard

Part Detail

Revision	F
Type	AC
Mech. spec.	34T045
Base	
Status	PRD/A
Elec. spec.	34WG5884
Layout	34LYT045
Eff. date	10-28-2024
CD Diagram	CD0005
Poles	06
Leads	9#18
Proprietary	False
Created date	11-21-2007

Front Shaft Indicator	None
Heater Indicator	No Heater
High Voltage Full Load Amps	1.2 a
Insulation Class	F
Inverter Code	Not Inverter
KVA Code	J
Lifting Lugs	No Lifting Lugs
Locked Bearing Indicator	No Locked Bearing
Motor Lead Exit	Ko Box
Motor Lead Quantity/Wire Size	9 @ 18 AWG
Motor Lead Termination	Flying Leads
Motor Standards	NEMA
Motor Type	3418M
Mounting Arrangement	F1
Number of Poles	6
Overall Length	10.88 IN
Power Factor	55
Product Family	General Purpose
Pulley End Bearing Type	Ball
Pulley Face Code	Standard
Pulley Shaft Indicator	Standard
Rodent Screen	None
Service Factor	1.00
Shaft Diameter	0.625 IN
Shaft Extension Location	Pulley End
Shaft Ground Indicator	No Shaft Grounding
Shaft Rotation	Reversible
Shaft Slinger Indicator	No Slinger
Speed	1140 rpm
Speed Code	Single Speed
Starting Method	Direct on line
Thermal Device - Bearing	None
Thermal Device - Winding	None
Vibration Sensor Indicator	No Vibration Sensor

Winding Thermal 1	None
Winding Thermal 2	None

Nameplate

NP1256L									
CAT.NO.	AOM3539								
SPEC.	34T045-5884G3								
HP	.5								
VOLTS	208-230/460								
AMP	2.5-2.4/1.2								
RPM	1140								
FRAME	56	**HZ**	60			**PH**	3		
SER.F.	1.00	**CODE**	J	**DES**	B	**CLASS**	F		
NEMA-NOM-EFF	72	**PF**	55						
RATING	40C AMB-CONT								
CC									
DE	6203	**ODE**	6203						
ENCL	TEAO	**SN**							

AC Induction Motor Performance Data
Record # 36355
Typical performance - not guaranteed values

Winding: 34WG5884-R023	**Type:** 3418M	**Enclosure:** TEAO

Nameplate Data				**460 V, 60 Hz: High Voltage Connection**	
Rated Output (HP)			.5	**Full Load Torque**	2.3 LB-FT
Volts			208-230/460	**Start Configuration**	direct on line
Full Load Amps			2.5-2.4/1.2	**Breakdown Torque**	7.7 LB-FT
R.P.M.			1140	**Pull-up Torque**	6 LB-FT
Hz	60	**Phase**	3	**Locked-rotor Torque**	6.2 LB-FT
NEMA Design Code	B	**KVA Code**	J	**Starting Current**	5 A
Service Factor (S.F.)			1	**No-load Current**	0.95 A
NEMA Nom. Eff.	72	**Power Factor**	55	**Line-line Res. @ 25ºC**	39.6 Ω
Rating - Duty			40C AMB-CONT	**Temp. Rise @ Rated Load**	
				Locked-rotor Power Factor	63
				Rotor inertia	0.0428 LB-FT2

Load Characteristics 460 V, 60 Hz, 0.5 HP

% of Rated Load	**25**	**50**	**75**	**100**	**125**	**150**
Power Factor	20	34	45	55	62	68
Efficiency	48	63	67	72	72	71
Speed	1185	1170	1155	1140	1120	1100
Line amperes	0.95	1	1.1	1.2	1.3	1.5

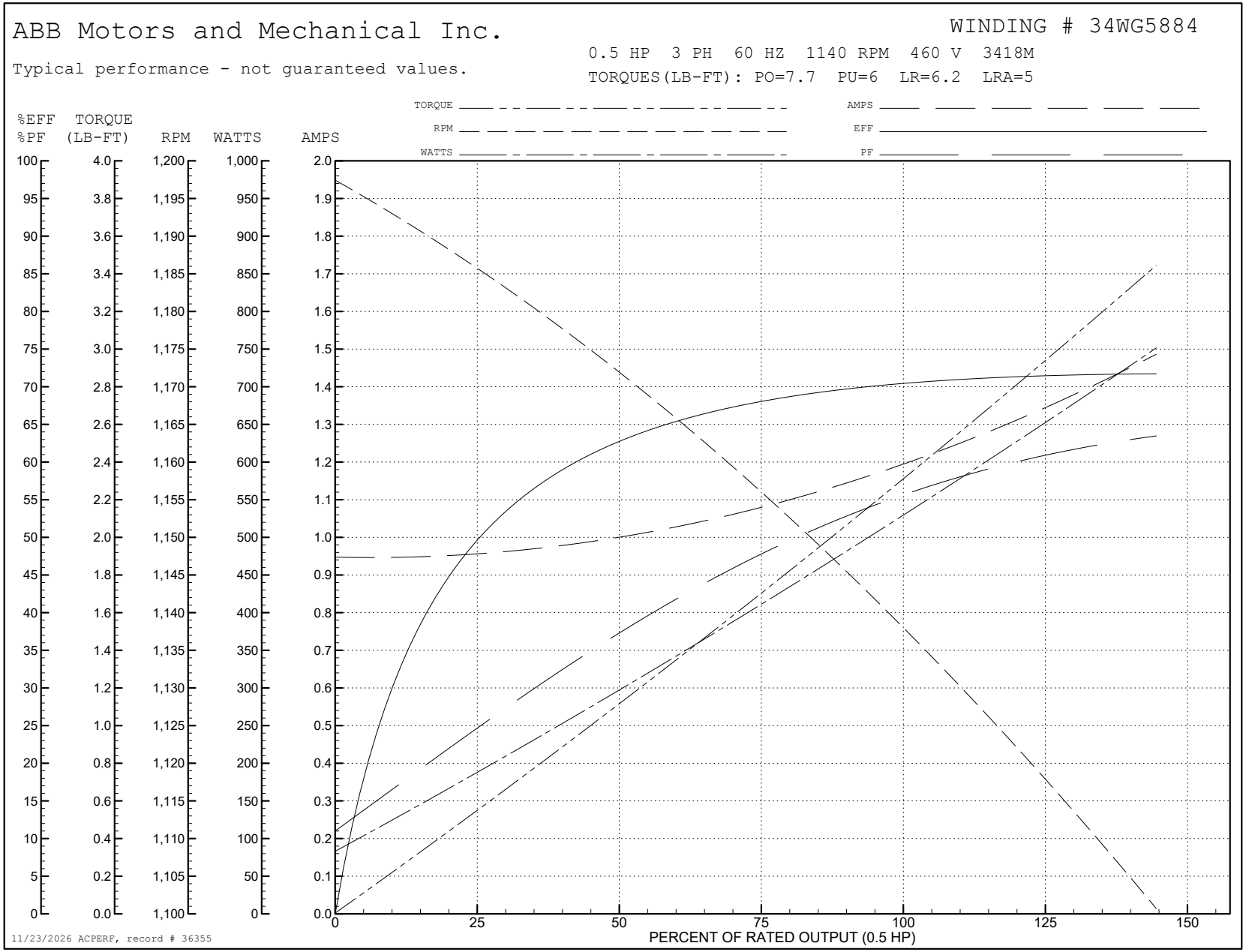
ABB Motors and Mechanical Inc.
WINDING # 34WG5884
Typical performance - not guaranteed values.
0.5 HP 3 PH 60 HZ 1140 RPM 460 V 3418M
TORQUES(LB-FT): PO=7.7 PU=6 LR=6.2 LRA=5
TORQUE
RPM
WATTS
AMPS
EFF
PF
%EFF %PF
TORQUE (LB-FT)
RPM
WATTS
AMPS
PERCENT OF RATED OUTPUT (0.5 HP)
11/23/2026 ACPERF, record # 36355

34LYT045

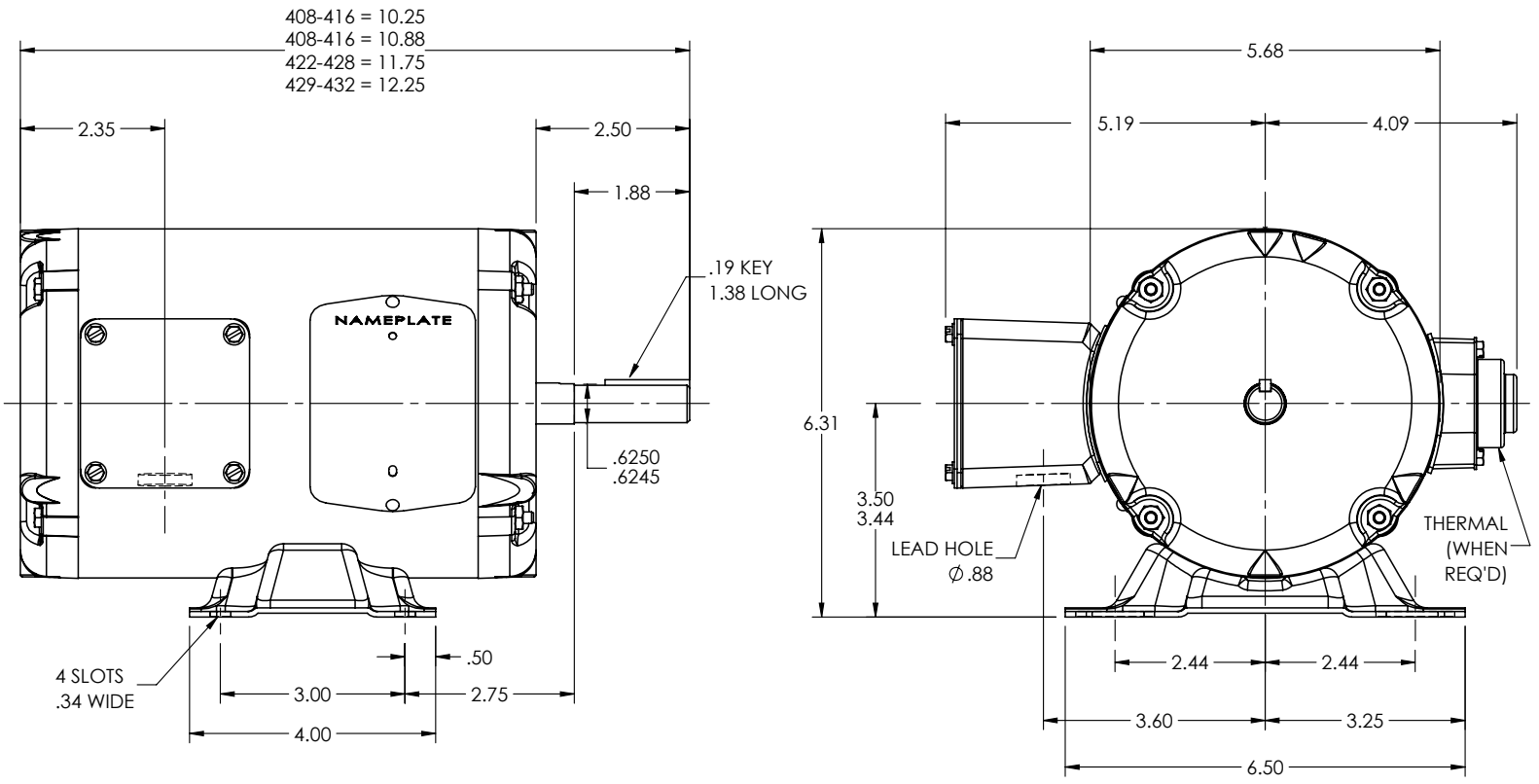

34LYT045

CUSTOMER IS RESPONSIBLE FOR DETERMINING THAT THE PRODUCT WILL PERFORM SUITABLY IN THE INTENDED APPLICATION

REV. DESC: LOAD TO SOLIDWORKS - REV D			
REV: E	VERSION: 02	REVISED: 03:33:19 01/03/2023	TDR: 000001201165
34LYT045	MODEL NO. 34LYT045		REF: -
	BY: ENFRAJ0		

BALDOR - RELIANCE®

STD HORZ MODEL 34M NEMA 56 TEAO

CD0005

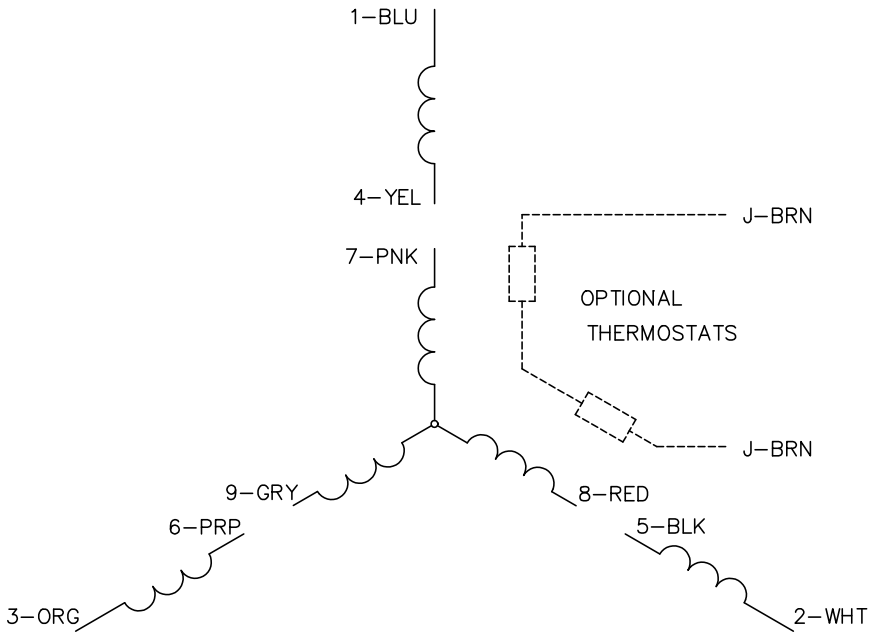

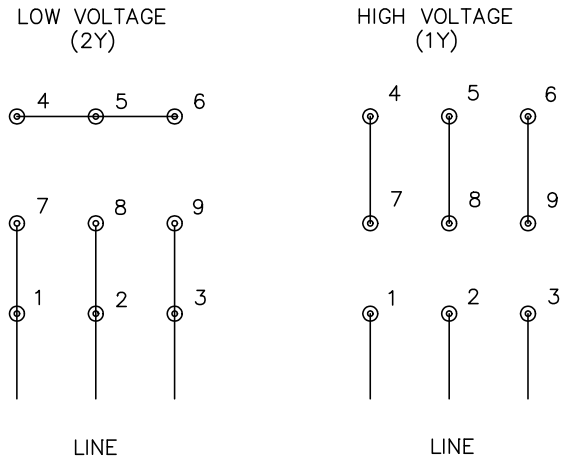

NOTES:

1. INTERCHANGE ANY TWO LINE LEADS TO REVERSE ROTATION.
2. OPTIONAL THERMOSTATS ARE PROVIDED WHEN SPECIFIED.
3. ACTUAL NUMBER OF INTERNAL PARALLEL CIRCUITS MAY BE A MULTIPLE OF THOSE SHOWN ABOVE.
4. LEAD COLORS ARE OPTIONAL. LEADS MUST ALWAYS BE NUMBERED AS SHOWN.

CD0005

REV. DESC: REVISE TO SHOW OPTIONAL COLORS			BALDOR ELECTRIC Co.
REV. LTR: E	BY: JLP	REVISED: 01/19/99 10:15	TDR: 0171435
CD0005		FILE: AAA00005140	MDL: –
		MTL: –	3PH, DV, 9 LEADS