ABB BALDOR RELIANCE

Customer information packet

AOM3538

.5HP, 1725RPM, 3PH, 60HZ, 56, 3413M, TEAO, F1
Class - None
Division - Not Applicable

Copyright © All product information within this document is subject to ABB Motors and Mechanical Inc. copyright © protection, unless otherwise noted.
11/23/2026 2:46:55 AM

Specifications

Enclosure	TEAO
Frame	56
Frame Material	Steel
Frequency	60.00 Hz
Haz Area Class and Group	None
Haz Area Division	Not Applicable
Motor Letter Type	Three Phase
Output @ Frequency	.500 HP @ 60 HZ
Phase	3
Synchronous Speed @ Frequency	1800 RPM @ 60 HZ
Voltage @ Frequency	460.0 V @ 60 HZ
	230.0 V @ 60 HZ
	208.0 V @ 60 HZ
Agency Approvals	CSA
	UR
Ambient Temperature	40 °C
Auxiliary Box	NO AUXILLARY BOX
Auxiliary Box Lead Termination	None
Base Indicator	Rigid
Bearing Grease Type	Polyrex EM (-20F +300F)
Blower	None
Current @ Voltage	2.400 A @ 208.0 V
	2.200 A @ 230.0 V
	1.100 A @ 460.0 V
Design Code	B
Drip Cover	No Drip Cover
Duty Rating	CONT
Efficiency @ 100% Load	70.0 %
Electrically Isolated Bearing	Not Electrically Isolated
Feedback Device	NO FEEDBACK
Front Face Code	Standard
Front Shaft Indicator	None

Part Detail

Revision	T
Type	AC
Mech. spec.	34T045
Base	
Status	PRD/A
Elec. spec.	34WGW138
Layout	34LYT045
Eff. date	10-28-2024
CD Diagram	CD0005
Poles	04
Leads	9#18 36" LG Y
Proprietary	False
Created date	01-01-0001

Heater Indicator	No Heater
High Voltage Full Load Amps	1.1 a
Insulation Class	F
Inverter Code	Not Inverter
KVA Code	L
Lifting Lugs	No Lifting Lugs
Locked Bearing Indicator	No Locked Bearing
Motor Lead Exit	Ko Box
Motor Lead Quantity/Wire Size	9 @ 18 AWG
Motor Lead Termination	Flying Leads
Motor Standards	NEMA
Motor Type	3413M
Mounting Arrangement	F1
Number of Poles	4
Overall Length	10.25 IN
Power Factor	60
Product Family	General Purpose
Pulley End Bearing Type	Ball
Pulley Face Code	Standard
Pulley Shaft Indicator	Standard
Rodent Screen	None
Service Factor	1.00
Shaft Diameter	0.625 IN
Shaft Extension Location	Pulley End
Shaft Ground Indicator	No Shaft Grounding
Shaft Rotation	Reversible
Shaft Slinger Indicator	No Slinger
Speed	1725 rpm
Speed Code	Single Speed
Starting Method	Direct on line
Thermal Device - Bearing	None
Thermal Device - Winding	None
Vibration Sensor Indicator	No Vibration Sensor

Nameplate

NP1256L											
CAT.NO.	AOM3538										
SPEC.	34T45W138										
HP	.5 AIR OVER										
VOLTS	208-230/460										
AMP	2.4-2.2/1.1										
RPM	1725										
FRAME	56		**HZ**	60			**PH**	3			
SER.F.	1.00	**CODE**	L	**DES**	B	**CLASS**		F			
NEMA-NOM-EFF	70	**PF**	60								
RATING	40C AMB-CONT										
CC											
DE	6203		**ODE**	6203							
ENCL	TEAO	**SN**									
	1000 FPM AT 44 CFM										

Accessories

Part number	Description	Multiplier
34-171	C FACE KIT	A8

AC Induction Motor Performance Data
Record # 6894
Typical performance - not guaranteed values

Winding: 34WGW138-R001	**Type:** 3413M	**Enclosure:** TEAO

Nameplate Data			
Rated Output (HP)			.5 AIR OVER
Volts			208-230/460
Full Load Amps			2.4-2.2/1.1
R.P.M.			1725
Hz	60	**Phase**	3
NEMA Design Code	B	**KVA Code**	L
Service Factor (S.F.)			1
NEMA Nom. Eff.	70	**Power Factor**	60
Rating - Duty			40C AMB-CONT

460 V, 60 Hz: High Voltage Connection	
Full Load Torque	1.5 LB-FT
Start Configuration	direct on line
Breakdown Torque	5.7 LB-FT
Pull-up Torque	4.2 LB-FT
Locked-rotor Torque	5.3 LB-FT
Starting Current	6.2 A
No-load Current	1.02 A
Line-line Res. @ 25ºC	35.4 Ω
Temp. Rise @ Rated Load	70°C
Locked-rotor Power Factor	67
Rotor inertia	0.031 LB-FT2

Load Characteristics 460 V, 60 Hz, 0.5 HP

% of Rated Load	**25**	**50**	**75**	**100**	**125**	**150**
Power Factor	27	38	48	57	65	71
Efficiency	42	58	65	69	70	71
Speed	1779	1762	1743	1723	1701	1677
Line amperes	1.03	1.06	1.11	1.18	1.27	1.39

ABB Motors and Mechanical Inc.

WINDING # 34WGW138

0.5 HP 3 PH 60 HZ 1725 RPM 460 V 3413M

Typical performance - not guaranteed values.

TORQUES(LB-FT): PO=5.7 PU=4.2 LR=5.3 LRA=6.2

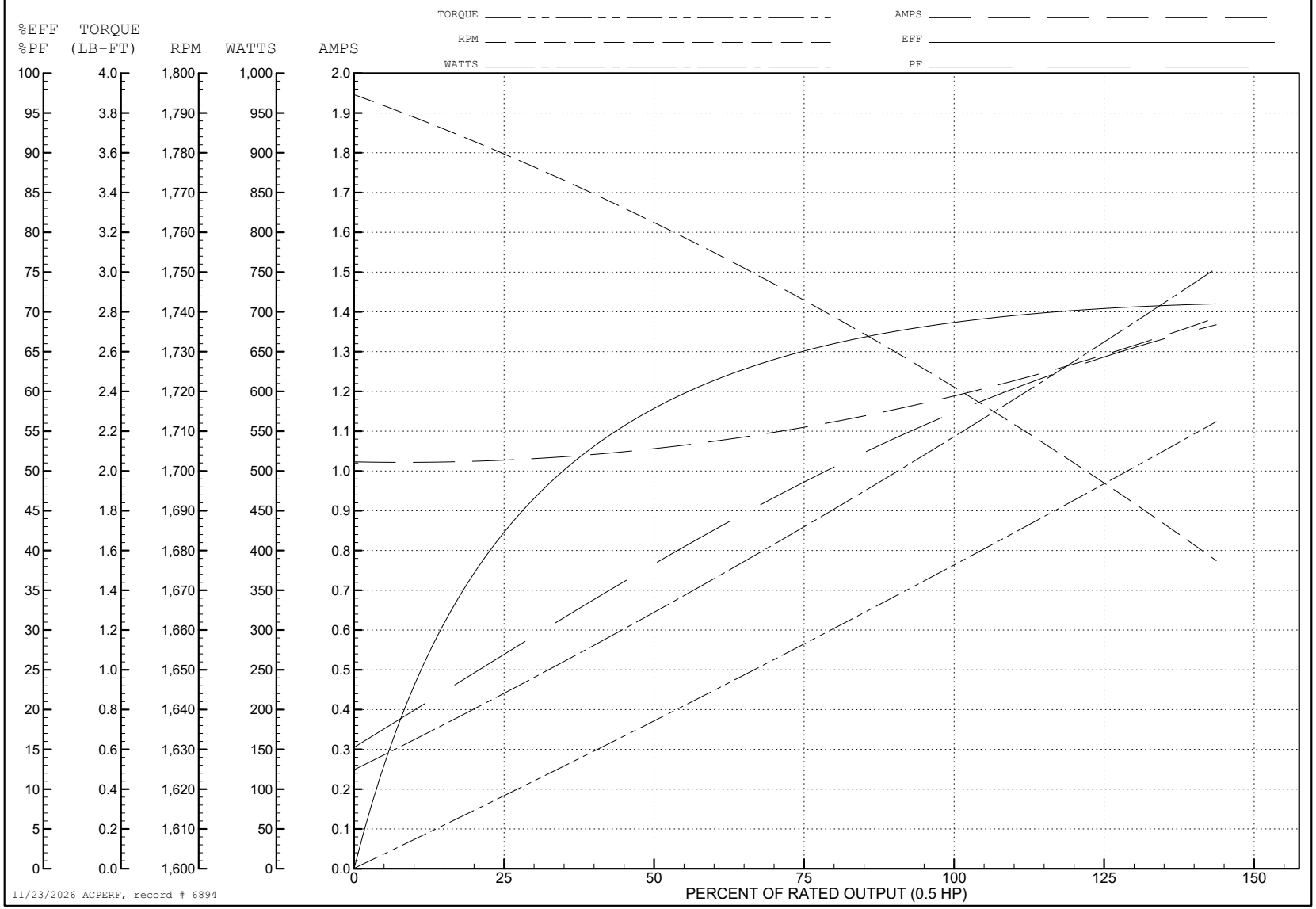

34LYT045

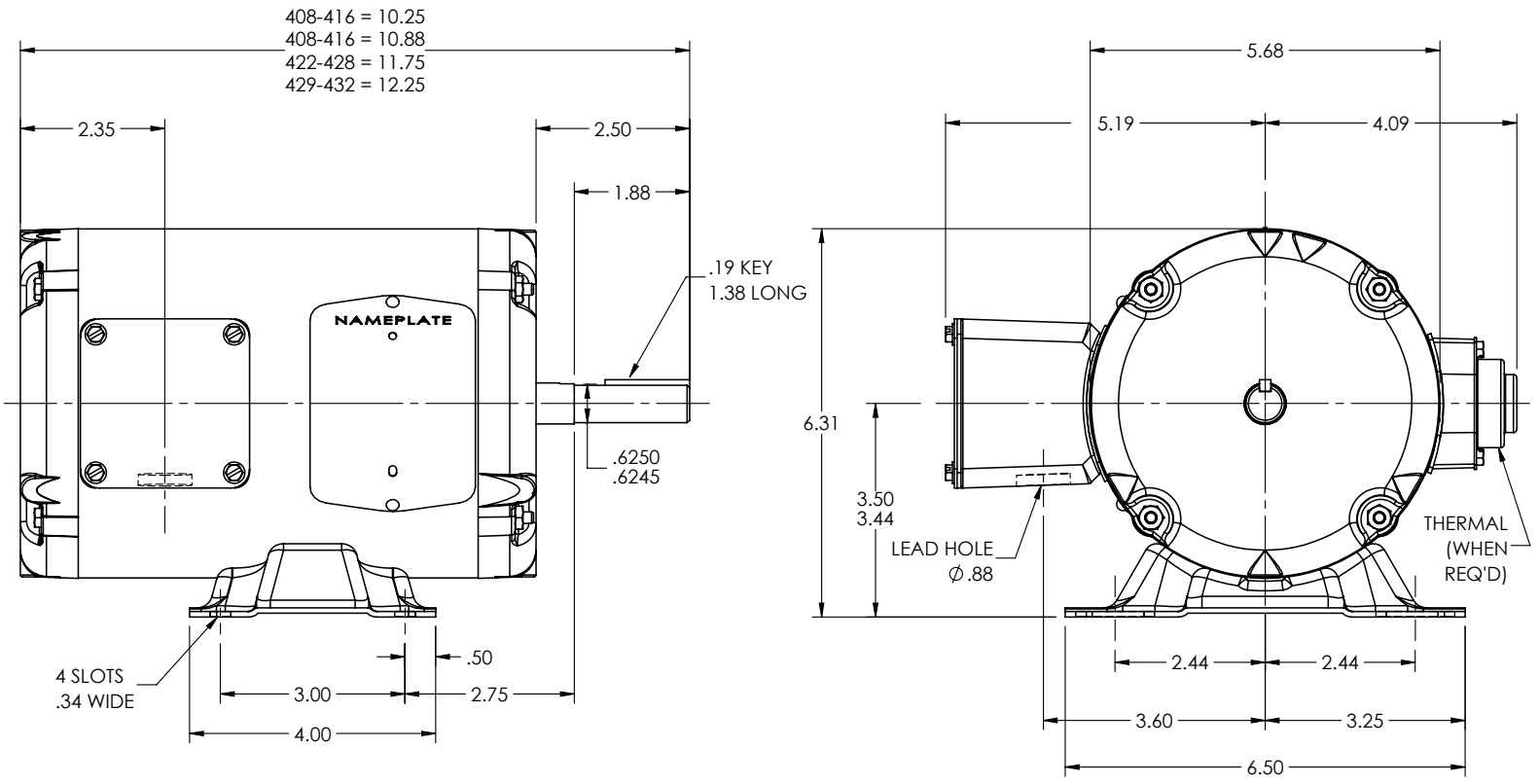

CUSTOMER IS RESPONSIBLE FOR DETERMINING THAT THE PRODUCT WILL PERFORM SUITABLY IN THE INTENDED APPLICATION

REV. DESC: LOAD TO SOLIDWORKS - REV D			
REV: E	VERSION: 02	REVISED: 03:33:19 01/03/2023	TDR: 000001201165
34LYT045	MODEL NO. 34LYT045		REF: -
	BY: ENFRAJ0		

BALDOR - RELIANCE®

STD HORZ MODEL 34M NEMA 56 TEAO

34LYT045

CD0005

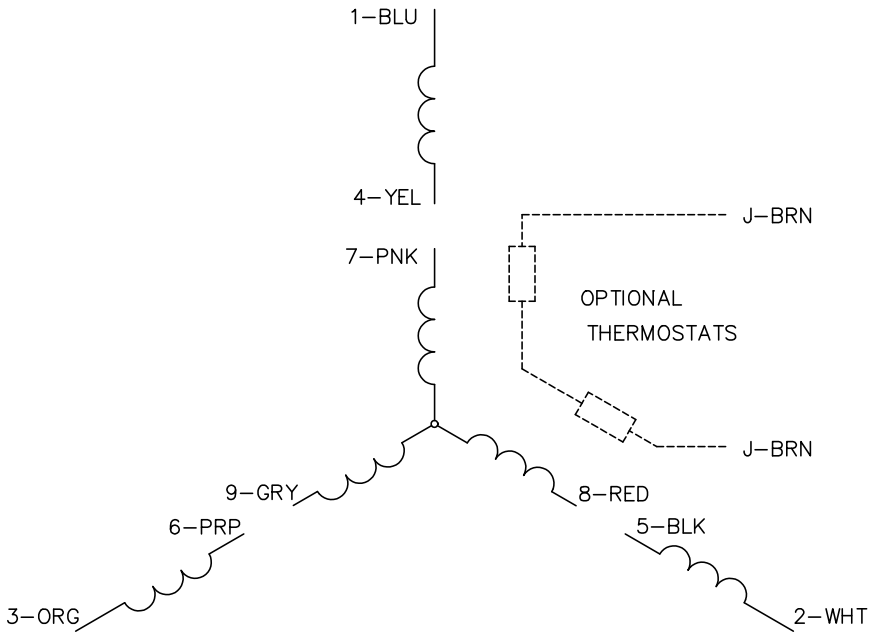

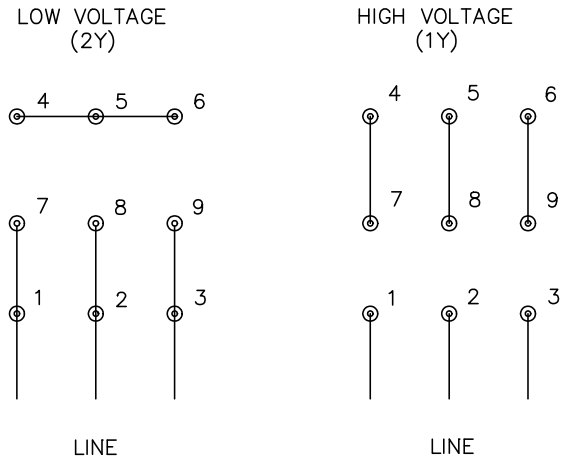

NOTES:

1. INTERCHANGE ANY TWO LINE LEADS TO REVERSE ROTATION.
2. OPTIONAL THERMOSTATS ARE PROVIDED WHEN SPECIFIED.
3. ACTUAL NUMBER OF INTERNAL PARALLEL CIRCUITS MAY BE A MULTIPLE OF THOSE SHOWN ABOVE.
4. LEAD COLORS ARE OPTIONAL. LEADS MUST ALWAYS BE NUMBERED AS SHOWN.

CD0005

REV. DESC: REVISE TO SHOW OPTIONAL COLORS			BALDOR ELECTRIC Co.
REV. LTR: E	BY: JLP	REVISED: 01/19/99 10:15	TDR: 0171435
CD0005		FILE: AAA00005140	MDL: –
		MTL: –	3PH, DV, 9 LEADS