39LYJ095

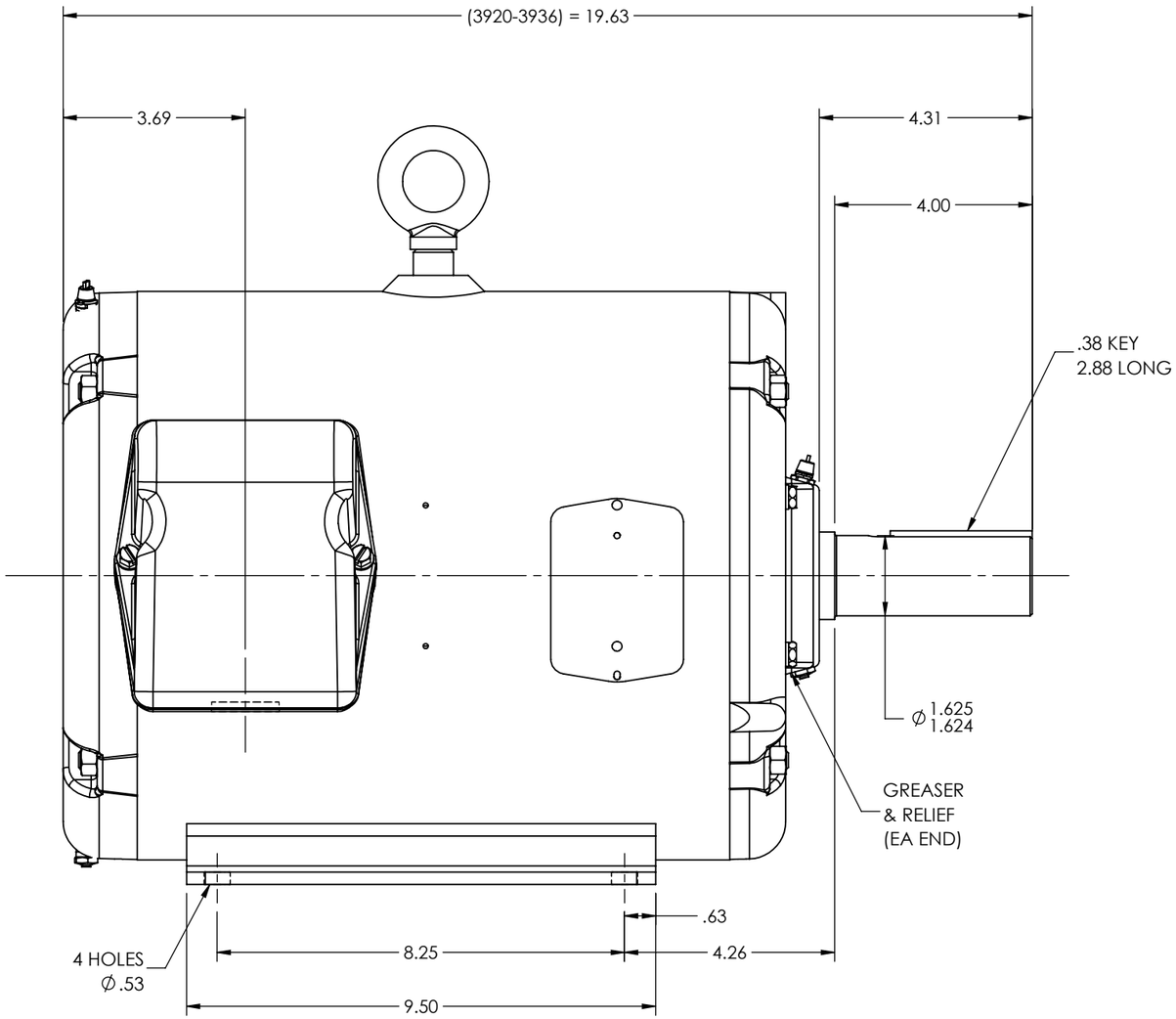

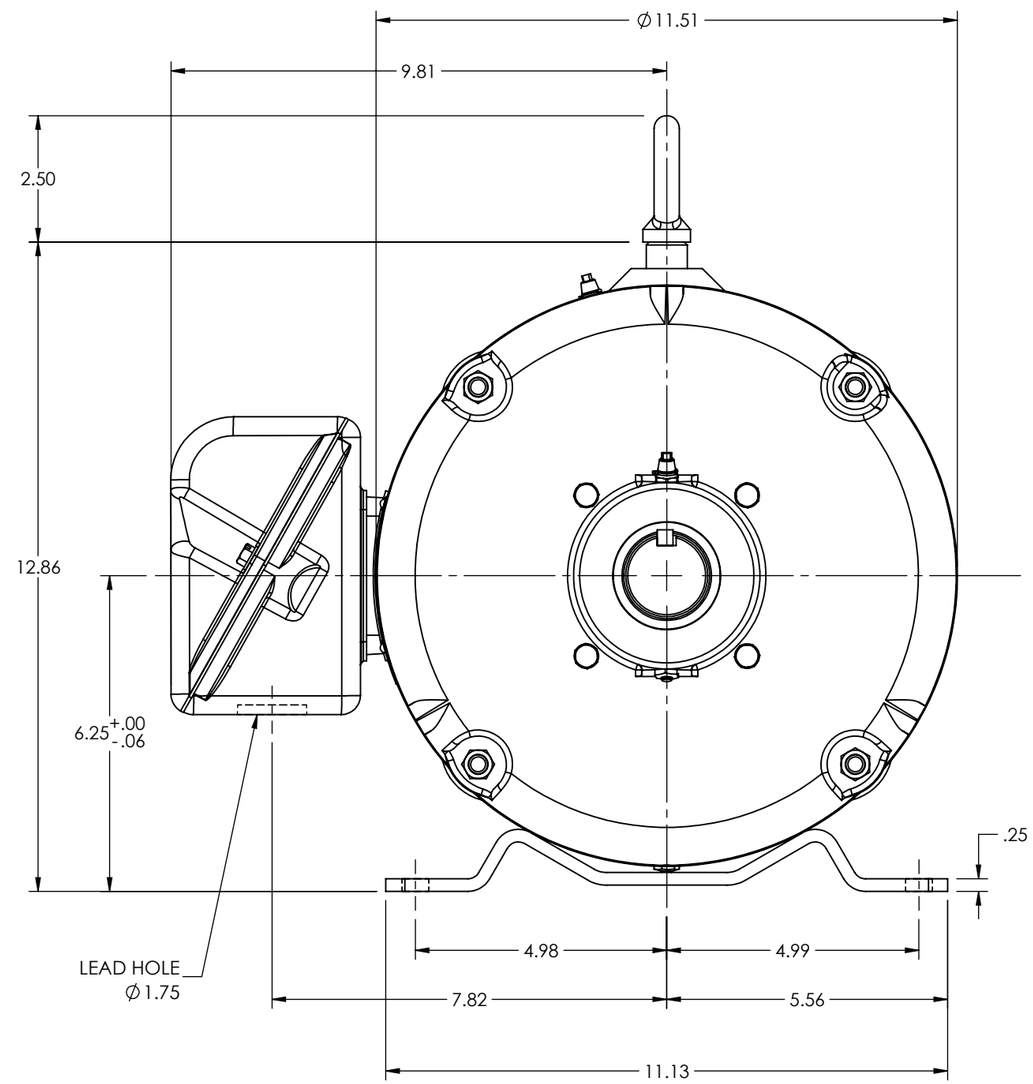

39LYJ095

CUSTOMER IS RESPONSIBLE FOR DETERMINING THAT THE PRODUCT WILL PERFORM SUITABLY IN THE INTENDED APPLICATION

REV. DESC: CONVERT AUTOCAD DRW TO SWD			
REV: G	VERSION: 03	REVISED: 03:09:59 05/20/2023	TDR: 000001208005
MODEL NO. 39LYJ095			REF: -
BY: ENALEM0			B

BALDOR - RELIANCE®

HOR TENV 254T "SUITABLE FOR VERT. MTG."