35LYQ142

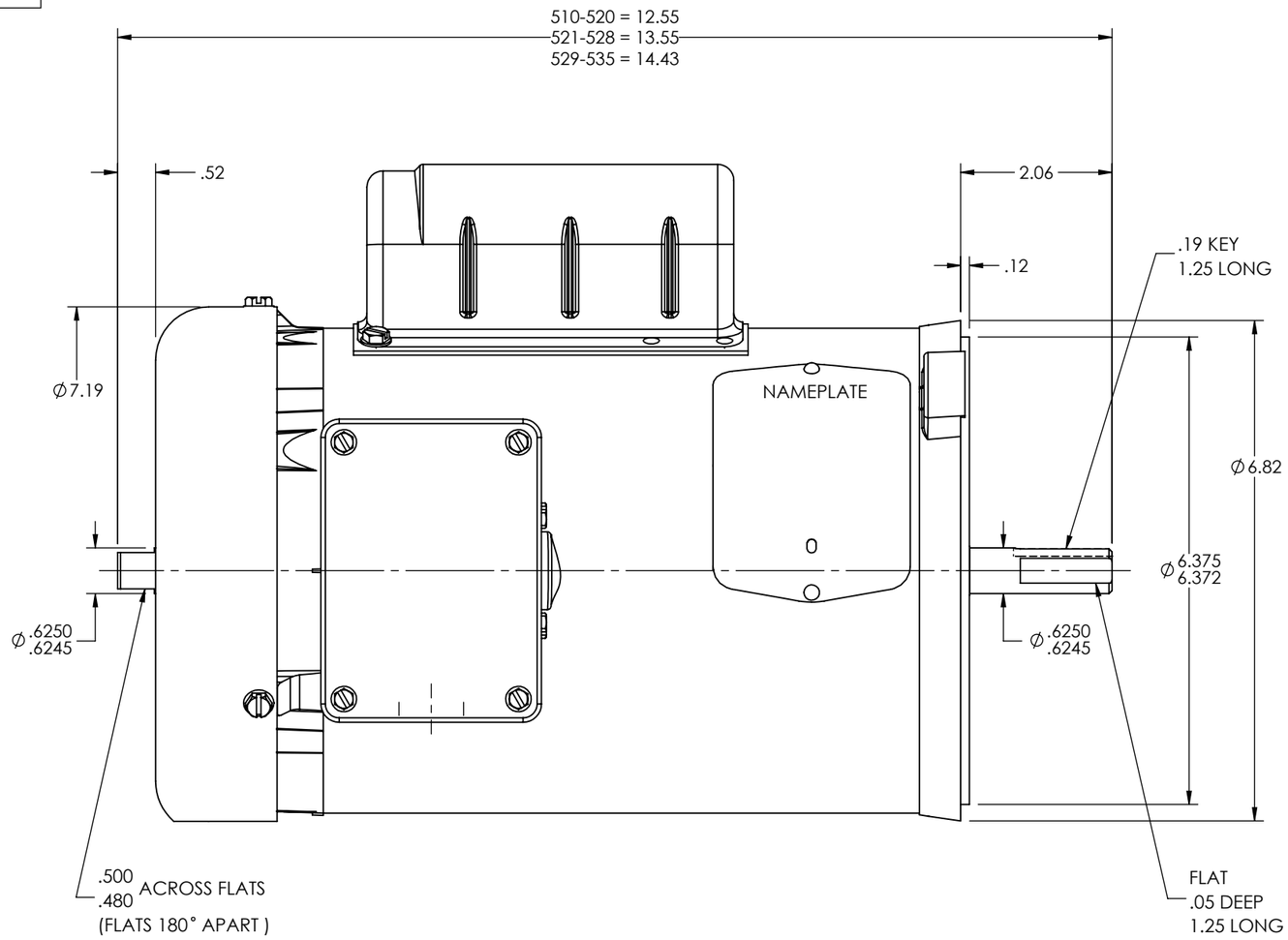

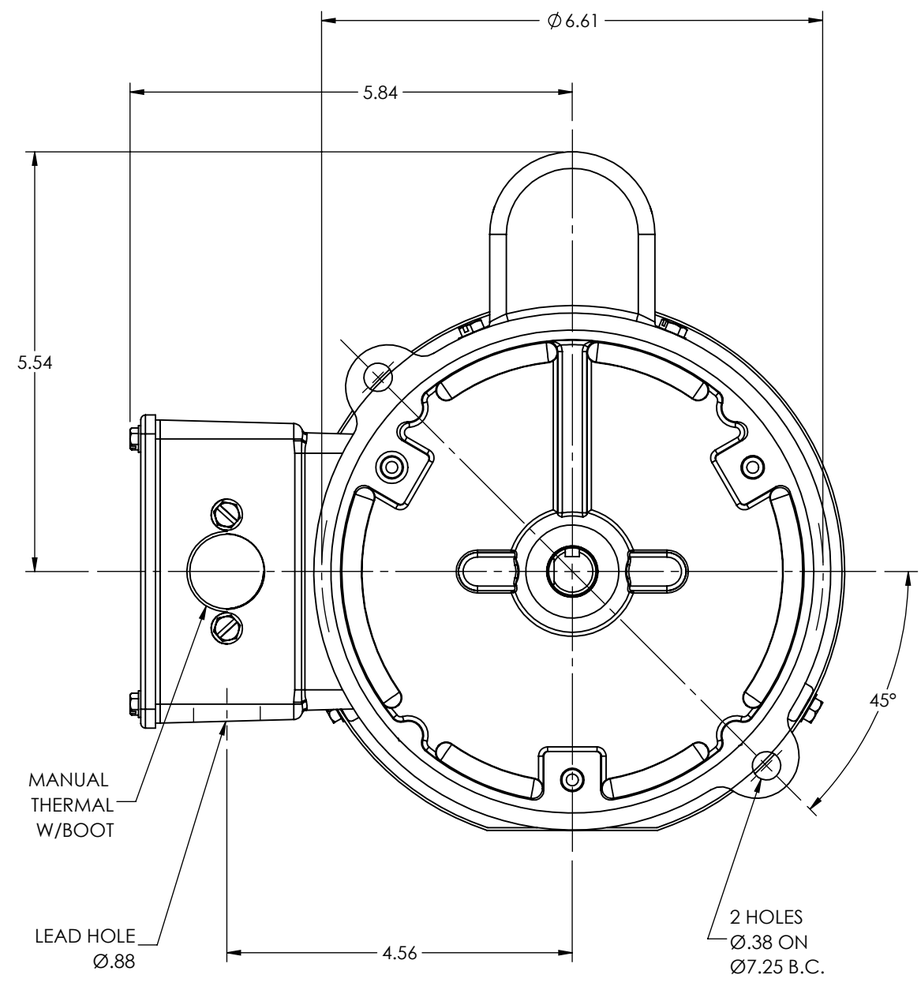

CUSTOMER IS RESPONSIBLE FOR DETERMINING THAT THE PRODUCT WILL PERFORM SUITABLY IN THE INTENDED APPLICATION

REV. DESC: LOAD INOPC CREATED SWD DRG INTO BUS - PACKAGE 12			
REV: E	VERSION: 03	REVISED: 01:15:18 12/11/2018	TDR: 000001093440
MODEL NO. 35LYQ142			REF: -
BY: USBUFRA			B

BALDOR - RELIANCE®

VERT 56YZ TEFC 35L W/TORQ.SW & GUARD,.75 MTO @ KOBX,"V"=1.94
SH 1 OF 1

35LYQ142