10LYM036

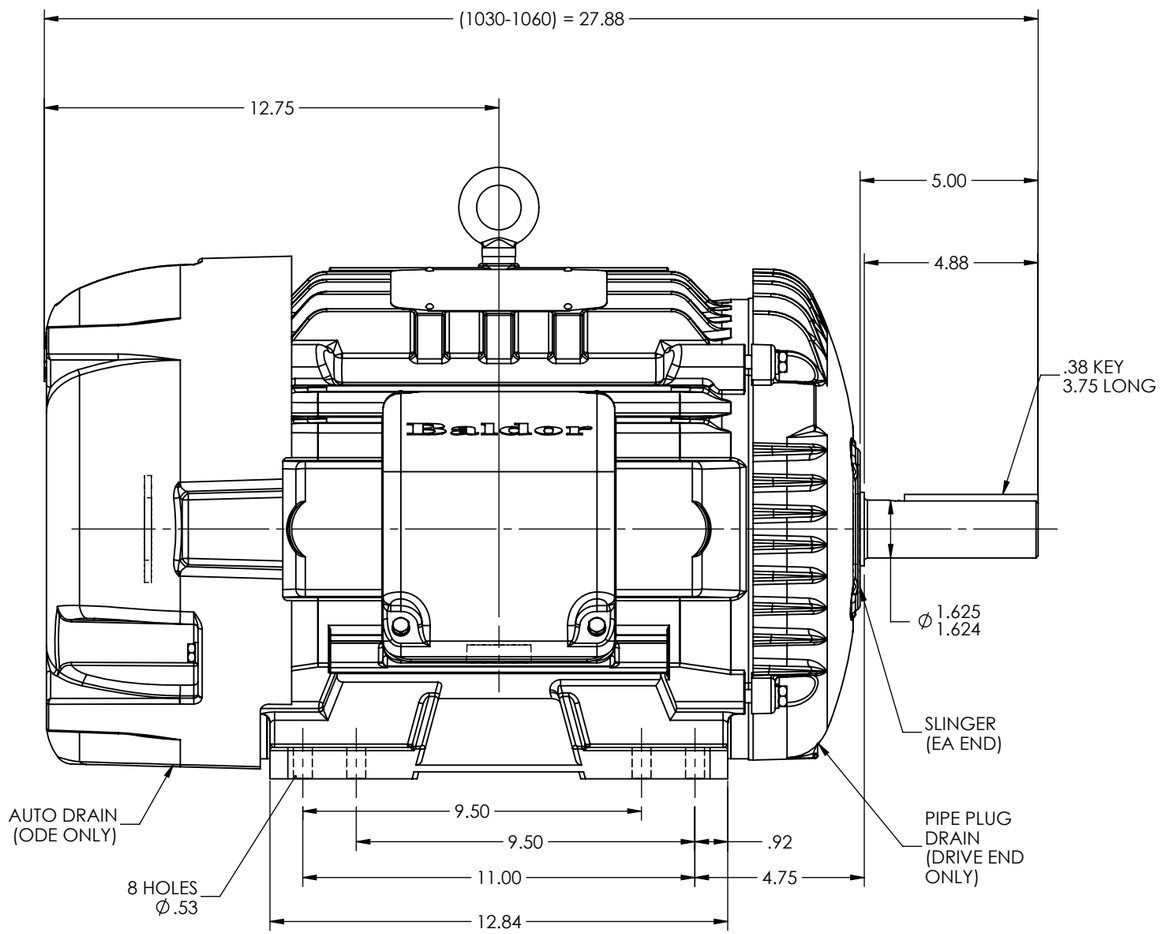

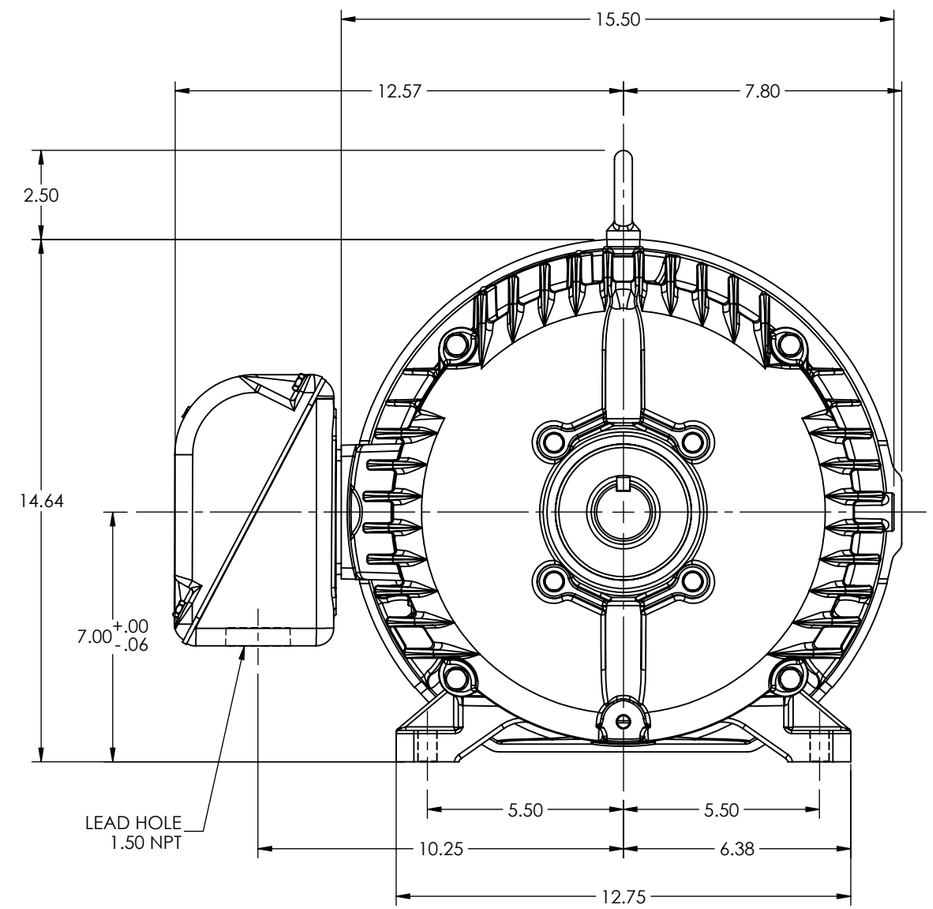

CUSTOMER IS RESPONSIBLE FOR DETERMINING THAT BALDOR'S PRODUCT WILL PERFORM SUITABLY IN THE INTENDED APPLICATION

REV. DESC: CONVERT STOCK LAYOUTS FROM AUTOCAD TO SWD			
REV: J	VERSION: 03	REVISED: 03:47:54 12/13/2023	TDR: 000001220227
MODEL NO. 10LYM036			REF: -
BY: USALMAZ			B

BALDOR

HORZ TEFC 284-6U GM SPECS.

10LYM036