ABB BALDOR RELIANCE

Customer information packet

34-0000-0132

.75HP, 1725RPM, 1PH, 60HZ, 56, 3418L, OPEN, F1
Class - None
Division - Not Applicable

Copyright © All product information within this document is subject to ABB Motors and Mechanical Inc. copyright © protection, unless otherwise noted.
11/27/2026 9:35:57 AM

Specifications

Enclosure	OPEN
Frame	56
Frame Material	Steel
Frequency	60.00 Hz
Haz Area Class and Group	None
Haz Area Division	Not Applicable
Motor Letter Type	Cap Start, Induction Run
Output @ Frequency	.750 HP @ 60 HZ
Phase	1
Synchronous Speed @ Frequency	1800 RPM @ 60 HZ
Voltage @ Frequency	115.0 V @ 60 HZ
Agency Approvals	C UR US
Ambient Temperature	40 °C
Auxiliary Box	NO AUXILLARY BOX
Auxiliary Box Lead Termination	None
Base Indicator	Rigid
Bearing Grease Type	Polyrex EM (-20F +300F)
Blower	None
Current @ Voltage	10.200 A @ 115.0 V
Design Code	N
Drip Cover	No Drip Cover
Duty Rating	CONT
Efficiency @ 100% Load	61.0 %
Electrically Isolated Bearing	Not Electrically Isolated
Feedback Device	NO FEEDBACK
Heater Indicator	No Heater
High Voltage Full Load Amps	10.2 a
Insulation Class	B
Inverter Code	Not Inverter
IP Rating	NONE
KVA Code	F
Lifting Lugs	No Lifting Lugs

Part Detail

Revision	K
Type	AC
Mech. spec.	
Base	
Status	PRD/A
Elec. spec.	34WGR664
Layout	34LY-000-051
Eff. date	04-01-2025
CD Diagram	CD0088
Poles	04
Leads	3#14
Proprietary	False
Created date	09-09-2019

Locked Bearing Indicator	No Locked Bearing
Motor Lead Termination	Cord
Motor Standards	NEMA
Motor Type	3418L
Mounting Arrangement	F1
Number of Poles	4
Overall Length	10.88 IN
Power Factor	74
Product Family	General Purpose
Pulley Face Code	Standard
Rodent Screen	None
Service Factor	1.00
Shaft Diameter	0.625 IN
Shaft Ground Indicator	No Shaft Grounding
Shaft Rotation	Reversible
Speed	1725 rpm
Speed Code	Single Speed
Starting Method	Direct on line
Thermal Device - Bearing	None
Thermal Device - Winding	None
Vibration Sensor Indicator	No Vibration Sensor
Winding Thermal 1	None
Winding Thermal 2	None

Nameplate

NP1256L											
CAT.NO.											
SPEC.	34-0000-0132										
HP	.75										
VOLTS	115										
AMP	10.2										
RPM	1725										
FRAME	56		**HZ**	60			**PH**	1			
SER.F.	1.00	**CODE**	F	**DES**	N	**CLASS**		B			
NEMA-NOM-EFF	61	**PF**	74								
RATING	40C AMB-15 MIN										
CC											
DE	6205		**ODE**	6203							
ENCL	OPEN	**SN**									

AC Induction Motor Performance Data
Record # 77621
Typical performance - not guaranteed values

Winding: 34WGR664-R001	**Type:** 3418L	**Enclosure:** OPEN

Nameplate Data			**115 V, 60 Hz: Single Voltage Motor**	
Rated Output (HP)		.75	**Full Load Torque**	2.29 LB-FT
Volts		115	**Start Configuration**	direct on line
Full Load Amps		10.2	**Breakdown Torque**	4.23 LB-FT
R.P.M.		1725	**Pull-up Torque**	4.49 LB-FT
Hz	60 **Phase**	1	**Locked-rotor Torque**	6.02 LB-FT
NEMA Design Code	N **KVA Code**	F	**Starting Current**	37.1 A
Service Factor (S.F.)		1	**No-load Current**	7.74 A
NEMA Nom. Eff.	61 **Power Factor**	74	**Line-line Res. @ 25ºC**	1.23 Ω A Ph 1.23 Ω B Ph
Rating - Duty		40C AMB-15 MIN	**Temp. Rise @ Rated Load**	
			Locked-rotor Power Factor	99.6
			Rotor inertia	0.0428 LB-FT2

Load Characteristics 115 V, 60 Hz, 0.75 HP

% of Rated Load	**25**	**50**	**75**	**100**	**125**	**150**
Power Factor	38	52	62	69	75	77
Efficiency	40.5	55.4	61.8	63.1	61.1	56.6
Speed	1775	1753	1730	1698	1662	1602
Line amperes	7.92	8.51	9.52	11	12.9	16.2

ABB Motors and Mechanical Inc.

WINDING # 34WGR664

0.75 HP 1 PH 60 HZ 1725 RPM 115 V 3418L

Typical performance - not guaranteed values.

TORQUES(LB-FT): PO=4.23 PU=4.49 LR=6.02 LRA=37.1

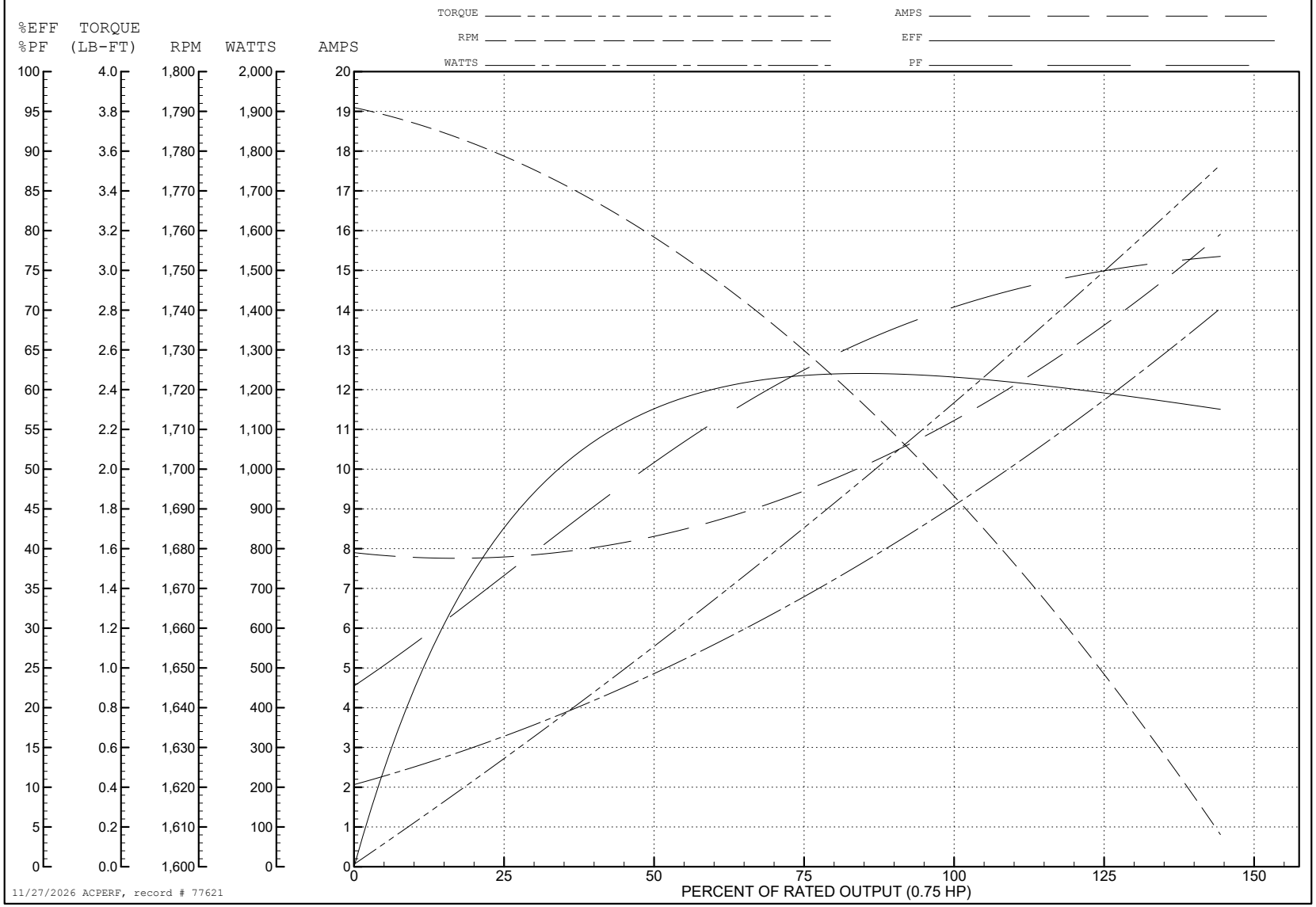

34LY-000-051

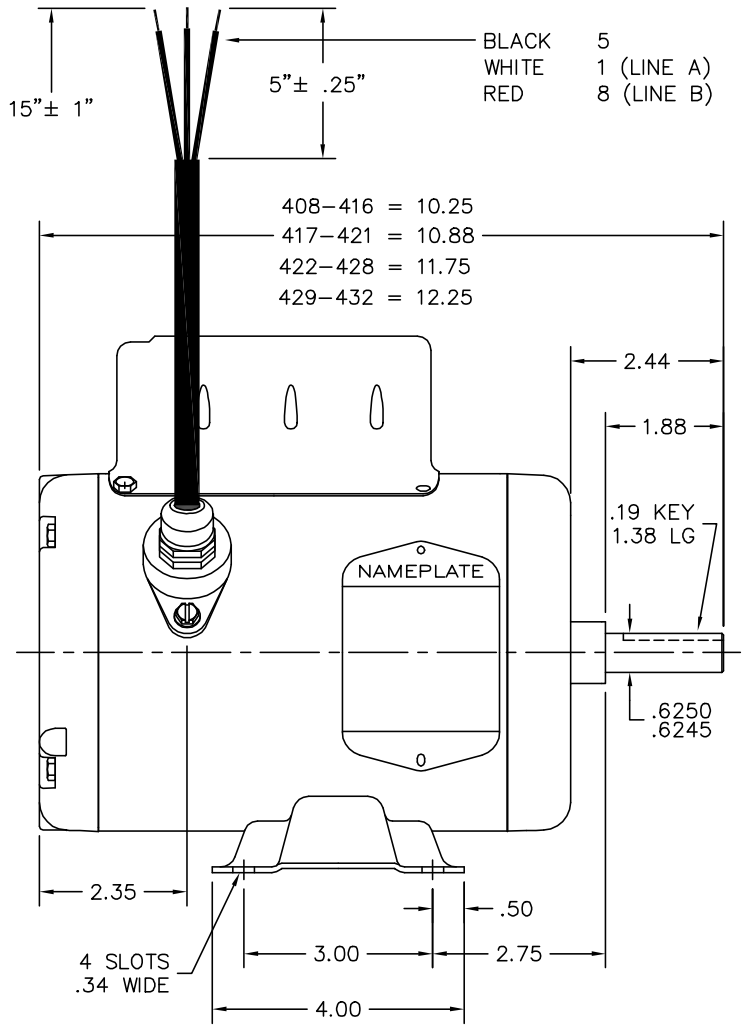

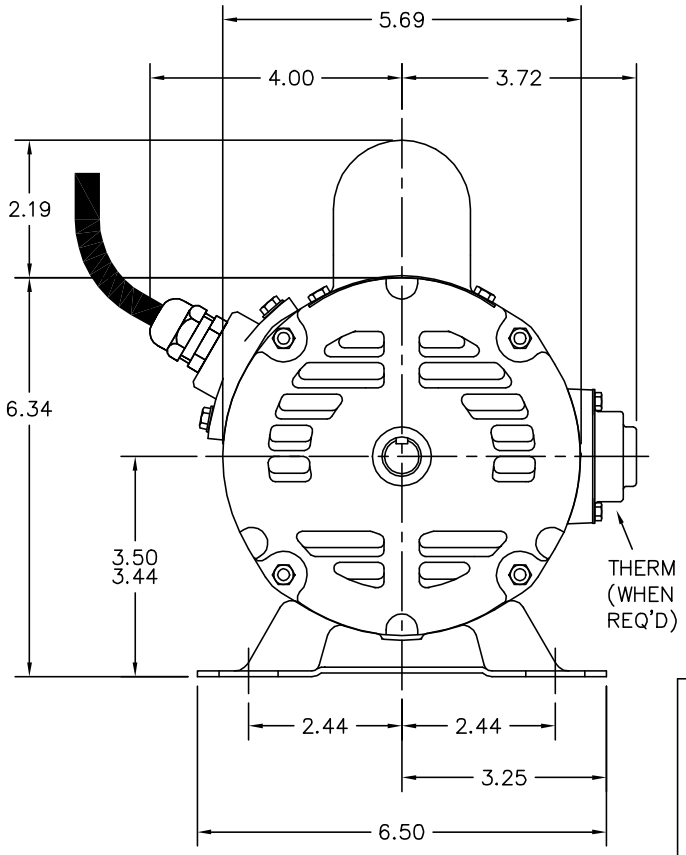

CUSTOMER IS RESPONSIBLE FOR DETERMINING THAT THE PRODUCT WILL PERFORM SUITABLY IN THE INTENDED APPLICATION.

REV. DESC: STRIP BACK CABLE TO 5" WAS 3"		
REV. LTR: B	VERSION: 02	TDR: 000001133693
FILE: \AAA\00249\455	REVISED: 11:13:41 02/26/2020	BY: ENELLGO
MTL: –		

BALDOR - RELIANCE®

HOR 34L NEMA 56 OPEN, LG CAP, BELLEVILLE, 205 BRG, CORD

SH 1 of 1

34LY-000-051

CD0088

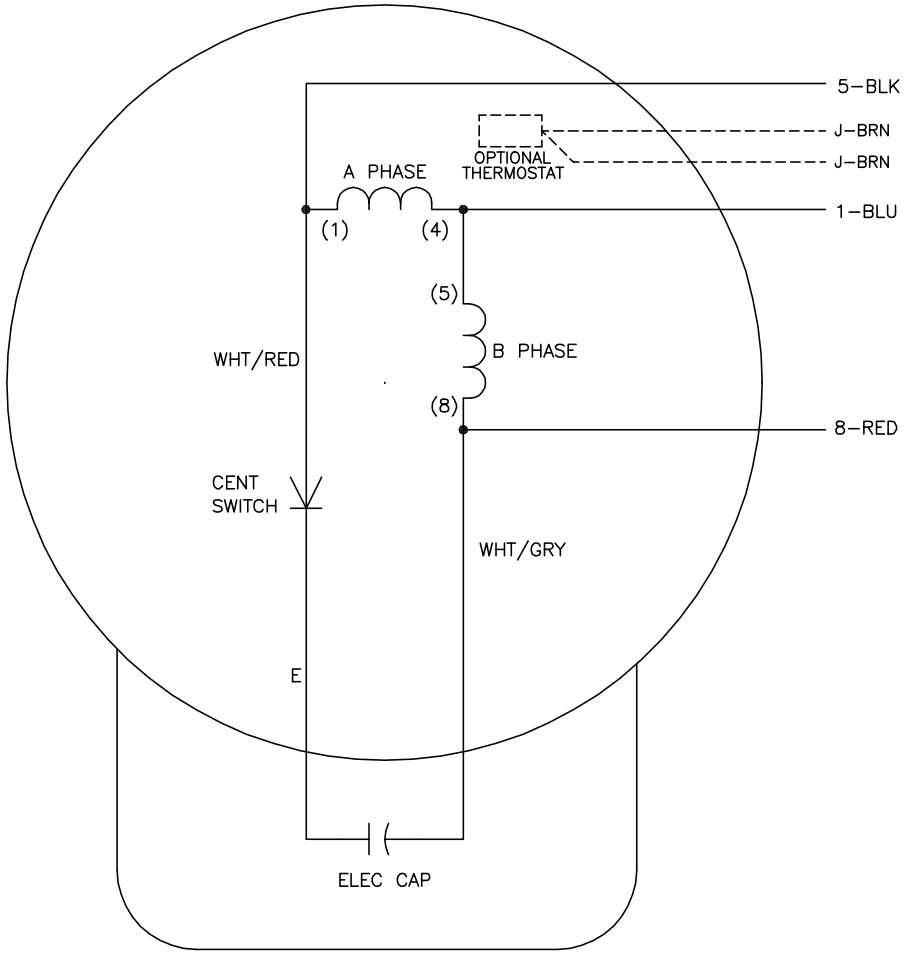

EXTERNAL CONNECTIONS FOR OPTIONAL SWITCH

SPDT – 115V

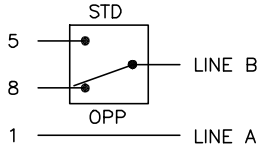

2PDT – 230V

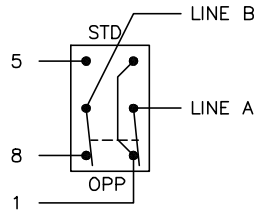

NOTES:

1. STD. ROT. IS CCW FACING END OPPOSITE SHAFT EXTENSION.
2. MULTIPLE CAPACITORS ARE CONNECTED IN PARALLEL UNLESS OTHERWISE SPECIFIED.
3. MOTOR WILL NOT INSTANT REVERSE.
4. USE 'CENTER OFF' SWITCH.
5. OPTIONAL THERMOSTAT IS PROVIDED WHEN SPECIFIED.
6. LEAD COLORS ARE OPTIONAL. LEADS MUST ALWAYS BE NUMBERED AS SHOWN.

REV. DESC: CORRECT 2PDT SWITCH DESCRIPTION			
REV. LTR: D	BY: JLP	REVISED: 15:50:12 07/10/2003	TDR: 307194
CD0088		FILE: AAA00007524	REF: CD0088
		MTL: –	

BALDOR ELECTRIC Co.

TYPE L, SV, 3 LEAD REVERSING, THERMAL, OPT. SPDT SWITCH

CD0088