Transmittal, reproduction, dissemination and/or editing of this document as well as utilization of its contents and communication thereof to others without express authorization are prohibited. Offenders will be held liable for the payment of damages. All rights created by patent grant or registration of a utility model or design patent are reserved.

Weitergabe sowie Vervielfältigung, Verbreitung und/oder Bearbeitung dieses Dokumentes, Verwertung und Mitteilung seines Inhaltes sind verboten, soweit nicht ausdrücklich gestattet. Zuwiderhandlungen verpflichten zu Schadenersatz. Alle Rechte vorbehalten für Patent- oder Gebrauchsmuster- oder Geschmacksmustereintragung vorbehalten

Confidential tire de secret d'entreprise. Tous droits réservés.
Comunicado como secreto empresarial. Reservados todos os direitos.
[redacted]
Confiado como secreto de empresa. Nos reservamos todos los derechos.

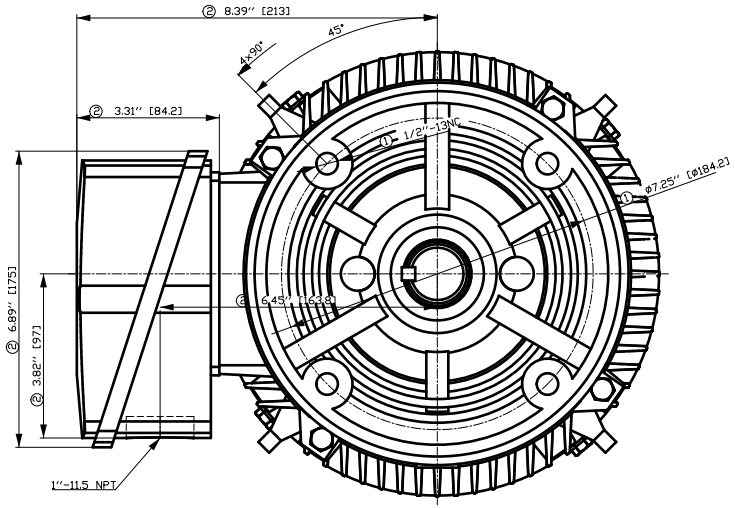

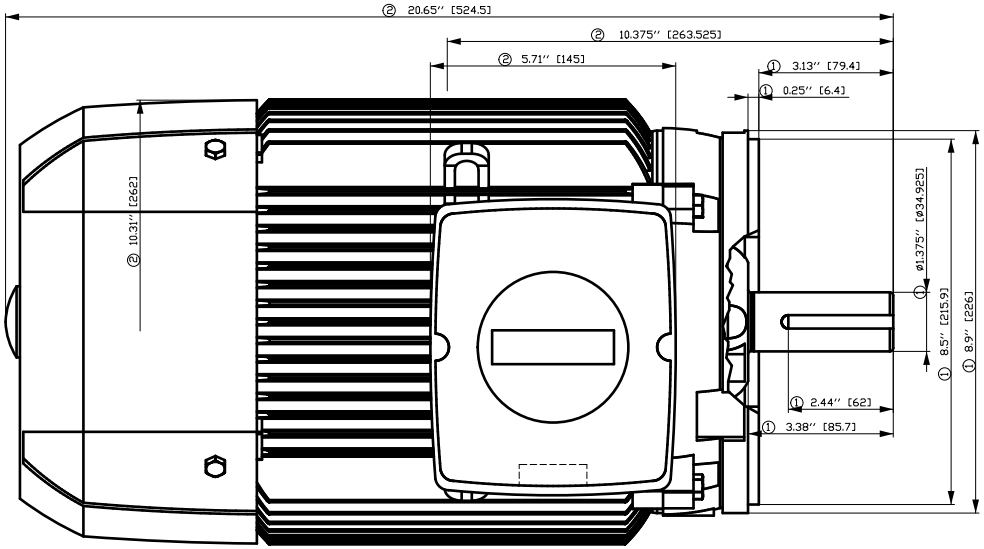

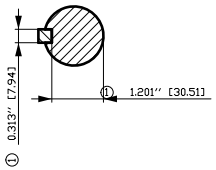

① Tolerances according to NEMA std.

② All these dimensions corresponding to assemblies and castings shall have a tolerance as per DIN standard 1686-GTB 19.

③ Not according to NEMA std.

Technische nderungen vorbehalten!
Technical data are subject to change!

Tolerance	Surface	Material	Weight	Scale
			-	mm
1LE2121-2AA11-3GA3 -	Author	Dimensional drawing MaÇzeichnung		
	Creator DTK			
	Approval			
	Department			
	Change Order	MLFB		Doc Type
	Doc State 9/12/23	Item No		Paper Size A3
	Revision Index RS	Doc No		1st Language en 2nd Language de
©ABB 2023	Project No -	Ref No -		Sheet 1 of 1