ABB BALDOR RELIANCE

Customer information packet

1406W

35M 4P GRINDER

Copyright © All product information within this document is subject to ABB Motors and Mechanical Inc. copyright © protection, unless otherwise noted.
11/23/2026 3:05:44 AM

Specifications

Enclosure	TENV
Frame Material	Steel
Frequency	50.00 Hz
	60.00 Hz
	50.00 Hz
	60.00 Hz
Motor Letter Type	Three Phase
Nameplate Output	5
Number of Poles	4
	4
Output @ Frequency	5.000 HP @ 60 HZ
	5.000 HP @ 50 HZ
Phase	3
	3
Shaft Diameter	1.250 IN
	1.250 IN
Speed	1500 rpm
	1800 rpm
	1500 rpm
	1800 rpm
Synchronous Speed @ Frequency	1800 RPM @ 60 HZ
Voltage	208 V
	230 V
	460 V
Voltage @ Frequency	460.0 V @ 60 HZ
	460.0 V @ 50 HZ
	208.0 V @ 50 HZ
	208.0 V @ 60 HZ
	230.0 V @ 50 HZ
	230.0 V @ 60 HZ
Agency Approvals	CSA
Ambient Temperature	40 °C
Base Indicator	Rigid

Part Detail

Revision	E
Type	AC
Mech. spec.	G14-116
Base	
Status	PRD/A
Elec. spec.	G4WG0119
Layout	G4LY0116
Eff. date	06-05-2026
CD Diagram	CD0258
Poles	04
Leads	9#14
Proprietary	False
Created date	11-20-2020

Current @ Voltage	6.350 A @ 230.0 V 12.700 A @ 208.0 V
Design Code	B
Duty Rating	CONT
Insulation Class	B
KVA Code	H
Motor Lead Quantity/Wire Size	9 @ 14 AWG
Motor Standards	Other
Motor Type	3735M
Mounting Arrangement	F1
Product Family	Grinder
Service Factor	1.00
Shaft Rotation	Phase Seq-Opp Std Rot (CWODE)
Speed Code	Single Speed
Starting Method	Direct on line
Winding Thermal 1	None
Winding Thermal 2	None

Nameplate

NP3412L			
CAT.NO.	1406W		
HP	5	**VOLTS**	230
PHASE	3	**AMPS**	12.7
HZ	50//60	**RPM**	1500//1800
SER.NO			
SPEC.	G14-116E-0119G1		
BLANK			

Accessories

Part number	Description	Multiplier
GA20	PEDESTAL INDUSTRIAL, CAST IRON 8"-14"	A8
GA9	PAIR LIGHTED EYESHIELDS	A8
GA9-1	SINGLE LIGHTED EYESHIELD	A8
GA9S	PAIR EYESHIELDS W/ ON-OFF SWITCH	A8
GA11	PAIR EYESHIELDS	A8
B147	14" 30 GRIT GRINDING WHEEL	A8
B148	14" 46 GRIT GRINDING WHEEL	A8
DC14-3	DUST CONTROL FOR 14 IN GRINDER	A8

AC Induction Motor Performance Data
Record # 85538
Typical performance - not guaranteed values

Winding: G4WG0119-R001	**Type:** G1435M	**Enclosure:** TENV

Nameplate Data				**460 V, 60 Hz: High Voltage Connection**	
Rated Output (HP)			5	**Full Load Torque**	14.88 LB-FT
Volts			208-230/460	**Start Configuration**	direct on line
Full Load Amps			12.7/6.35	**Breakdown Torque**	53.78 LB-FT
R.P.M.			1500//1800	**Pull-up Torque**	22.93 LB-FT
Hz	50//60	**Phase**	3	**Locked-rotor Torque**	31.17 LB-FT
NEMA Design Code	B	**KVA Code**	H	**Starting Current**	41.65 A
Service Factor (S.F.)			1	**No-load Current**	3.16 A
NEMA Nom. Eff.	0	**Power Factor**	0	**Line-line Res. @ 25ºC**	2.06 Ω
Rating - Duty			40C AMB-CONT	**Temp. Rise @ Rated Load**	
				Locked-rotor Power Factor	39.4
				Rotor inertia	0.861 lb-ft²

Load Characteristics 460 V, 60 Hz, 5 HP

% of Rated Load	**25**	**50**	**75**	**100**	**125**	**150**
Power Factor	41	63	75	82	85	87
Efficiency	82.7	88.7	89.9	90.1	90	89.4
Speed	1791	1784	1776	1768	1759	1749
Line amperes	3.49	4.18	5.18	6.35	7.63	9.02

ABB Motors and Mechanical Inc.

WINDING # G4WG0119

5 HP 3 PH 60 HZ 1768 RPM 460 V G1435M

Typical performance - not guaranteed values.

TORQUES(LB-FT): PO=53.78 PU=22.93 LR=31.17 LRA=41.65

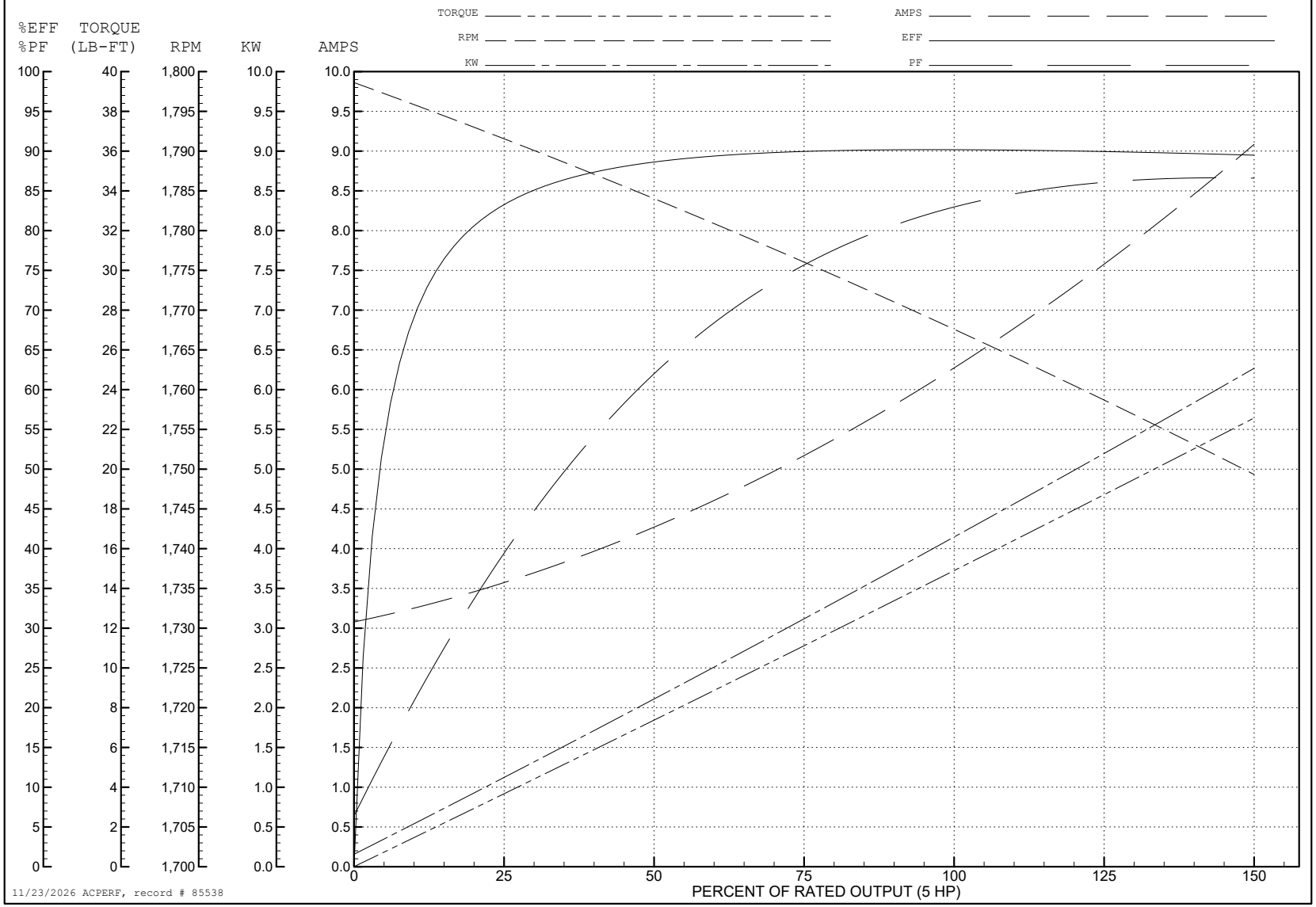

11/23/2026 ACPERF, record # 85538

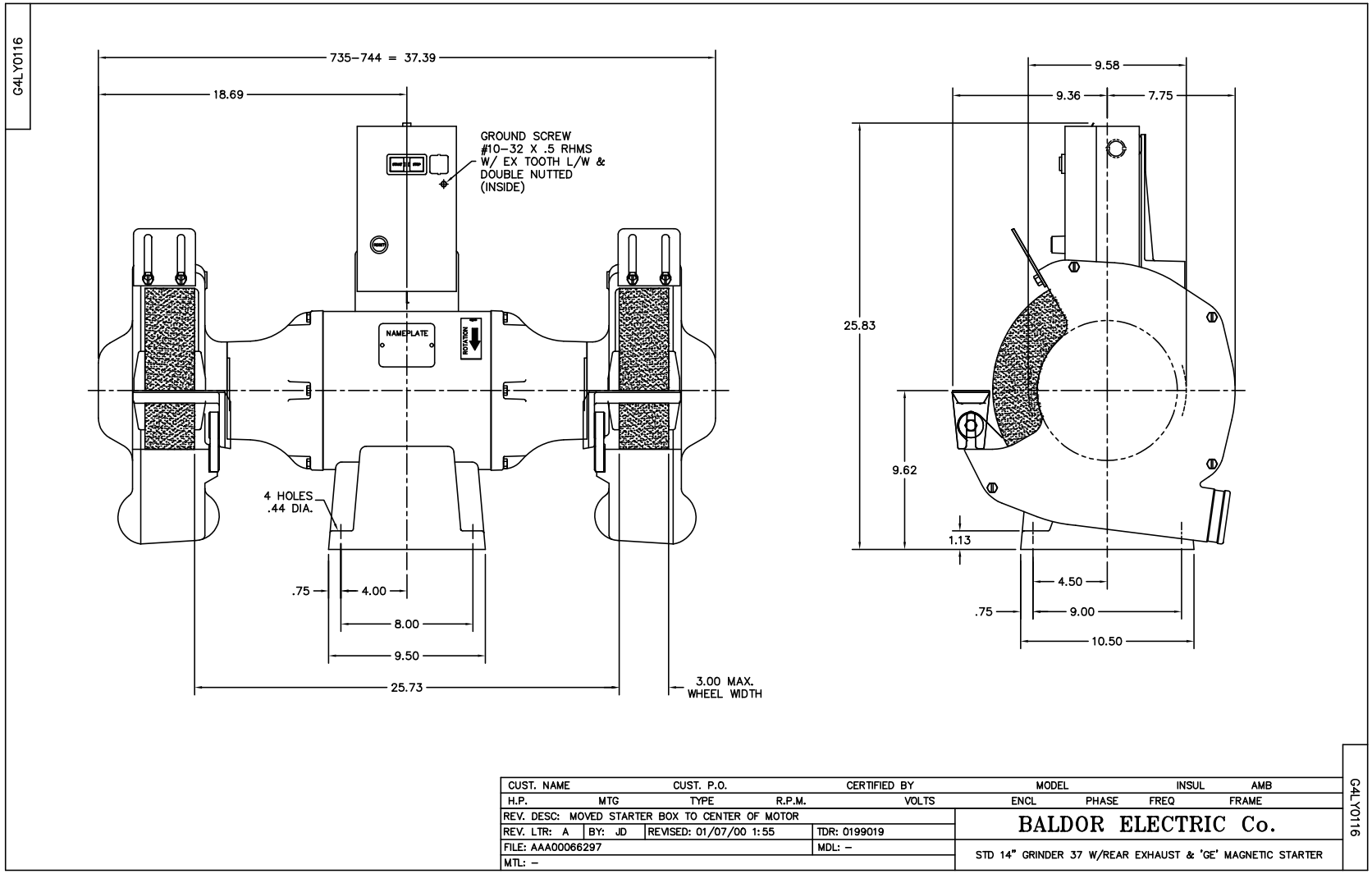
G4LY0116
735–744 = 37.39
18.69
GROUND SCREW
#10–32 X .5 RHMS
W/ EX TOOTH L/W &
DOUBLE NUTTED
(INSIDE)
NAMEPLATE
ROTATION
4 HOLES
.44 DIA.
.75
4.00
8.00
9.50
25.73
3.00 MAX.
WHEEL WIDTH
9.58
9.36
7.75
25.83
9.62
1.13
4.50
.75
9.00
10.50
CUST. NAME
CUST. P.O.
CERTIFIED BY
MODEL
INSUL
AMB
H.P.
MTG
TYPE
R.P.M.
VOLTS
ENCL
PHASE
FREQ
FRAME
REV. DESC: MOVED STARTER BOX TO CENTER OF MOTOR
REV. LTR: A
BY: JD
REVISED: 01/07/00 1:55
TDR: 0199019
FILE: AAA00066297
MDL: –
MTL: –
BALDOR ELECTRIC Co.
STD 14" GRINDER 37 W/REAR EXHAUST & 'GE' MAGNETIC STARTER
G4LY0116

CD0258

MOTOR

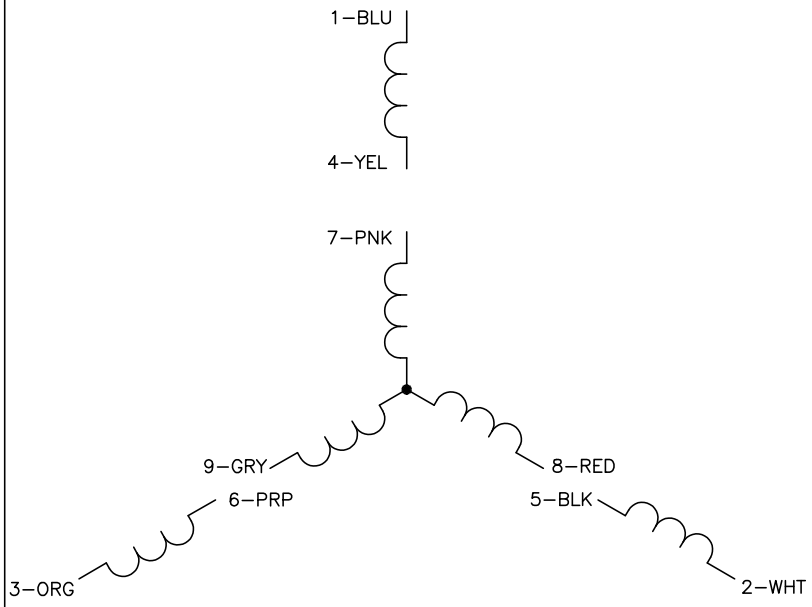

NOTES:

1. GROUND BASE TO BAND.
2. LEAD COLORS ARE OPTIONAL. LEADS MUST ALWAYS BE NUMBERED AS SHOWN.

STARTER BRACKET CONDUIT BOX

HIGH VOLTAGE

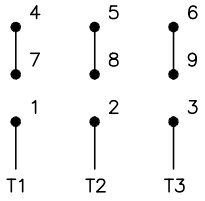

LOW VOLTAGE

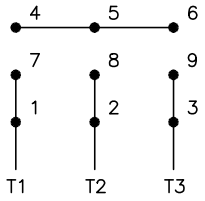

NOTE:

THE MOTOR IS FACTORY CONNECTED FOR THE SAME VOLTAGE AS THE MAGNETIC STARTER. A MAGNETIC STARTER FOR THE PROPER VOLTAGE EQUIPPED WITH THE CORRECT HEATER ELEMENTS WILL BE NEEDED FOR A VOLTAGE CONNECTION CHANGE.

STARTER

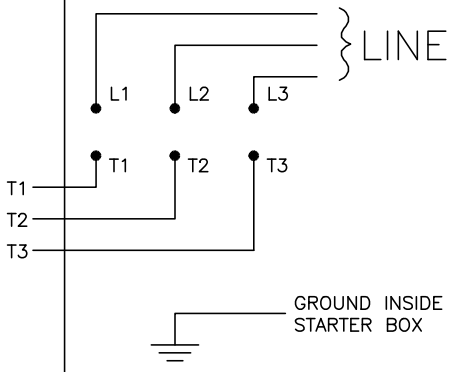

NOTE:

INTERCHANGE ANY TWO LINE LEADS TO REVERSE ROTATION.

CD0258

REV. DESC: REVISE TO SHOW OPTIONAL COLORS			BALDOR ELECTRIC Co.
REV. LTR: C	BY: EAH	REVISED: 05/05/99 11:35	TDR: 0179909
CD0258		FILE: AAA00051260	MDL: –
		MTL: –	3PH, DV, 9 LEAD, GRINDER OR BUFFER W/MAGNETIC STARTER

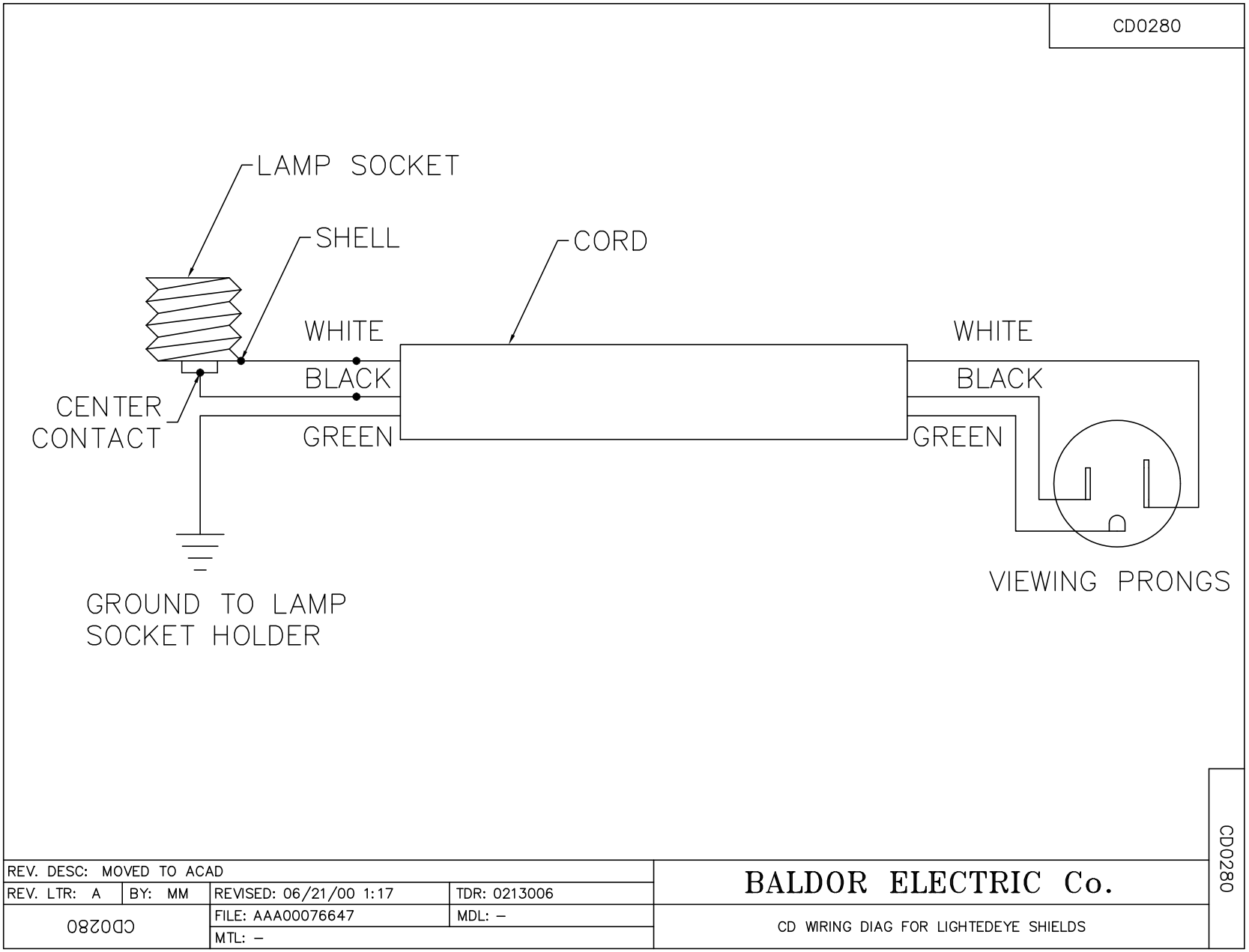
CD0280
LAMP SOCKET
SHELL
CORD
WHITE
BLACK
GREEN
CENTER CONTACT
WHITE
BLACK
GREEN
VIEWING PRONGS
GROUND TO LAMP SOCKET HOLDER
CD0280
REV. DESC: MOVED TO ACAD
REV. LTR: A
BY: MM
REVISED: 06/21/00 1:17
TDR: 0213006
FILE: AAA00076647
MDL: –
MTL: –
CD0280
BALDOR ELECTRIC Co.
CD WIRING DIAG FOR LIGHTEDEYE SHIELDS