ABB BALDOR RELIANCE

Customer information packet

129W

3HP, 1500/1800RPM, 3PH, 50/60HZ, 3628M, GRND

Copyright © All product information within this document is subject to ABB Motors and Mechanical Inc. copyright © protection, unless otherwise noted.
11/23/2026 2:34:25 AM

Specifications

Enclosure	TENV
Frame Material	Steel
Frequency	50.00 Hz
	60.00 Hz
	50.00 Hz
	60.00 Hz
Motor Letter Type	Three Phase
Nameplate Output	3
Number of Poles	4
	4
Output @ Frequency	3.000 HP @ 60 HZ
	3.000 HP @ 50 HZ
Phase	3
	3
Product Style	GRINDER
Speed	1500 rpm
	1800 rpm
	1500 rpm
	1800 rpm
Synchronous Speed @ Frequency	1500 RPM @ 50 HZ
Voltage	575 V
Voltage @ Frequency	575.0 V @ 50 HZ
	575.0 V @ 60 HZ
Agency Approvals	UR
	CSA
Ambient Temperature	40 °C
Base Indicator	Rigid
Current @ Voltage	3.000 A @ 575.0 V
Duty Rating	CONT
Insulation Class	B
KVA Code	G
Motor Lead Quantity/Wire Size	3 @ 16 AWG

Part Detail

Revision	W
Type	AC
Mech. spec.	G12-118
Base	
Status	PRD/A
Elec. spec.	G2WG0047
Layout	G2LY0118
Eff. date	06-05-2026
CD Diagram	CD0259
Poles	04
Leads	3#16 12"FRM STAT IRN Y
Proprietary	False
Created date	01-01-0001

Motor Standards	Other
Motor Type	3628M
Mounting Arrangement	F1
Product Family	Grinder
Service Factor	1.00
Shaft Extension Location	Double Shaft
Shaft Rotation	Phase Seq-Opp Std Rot (CWODE)
Speed Code	Single Speed
Starting Method	Direct on line
Thermal Device - Winding	None

Nameplate

NP3412L			
CAT.NO.	129W		
HP	3	**VOLTS**	575
PHASE	3	**AMPS**	3
HZ	50//60	**RPM**	1500//1800
SER.NO			
SPEC.	G12-118B-0047		
BLANK			

Accessories

Part number	Description	Multiplier
GA20	PEDESTAL INDUSTRIAL, CAST IRON 8"-14"	A8
GA9	PAIR LIGHTED EYESHIELDS	A8
GA9-1	SINGLE LIGHTED EYESHIELD	A8
GA9S	PAIR EYESHIELDS W/ ON-OFF SWITCH	A8
GA11	PAIR EYESHIELDS	A8
B125	12" 30 GRIT GRINDING WHEEL	A8
B126	12' 46 GRIT GRINDING WHEEL	A8
DC12	DUST CONTROL UNIT	A8
DC12-3	DUST CONTROL UNIT	A8

G2LY0118

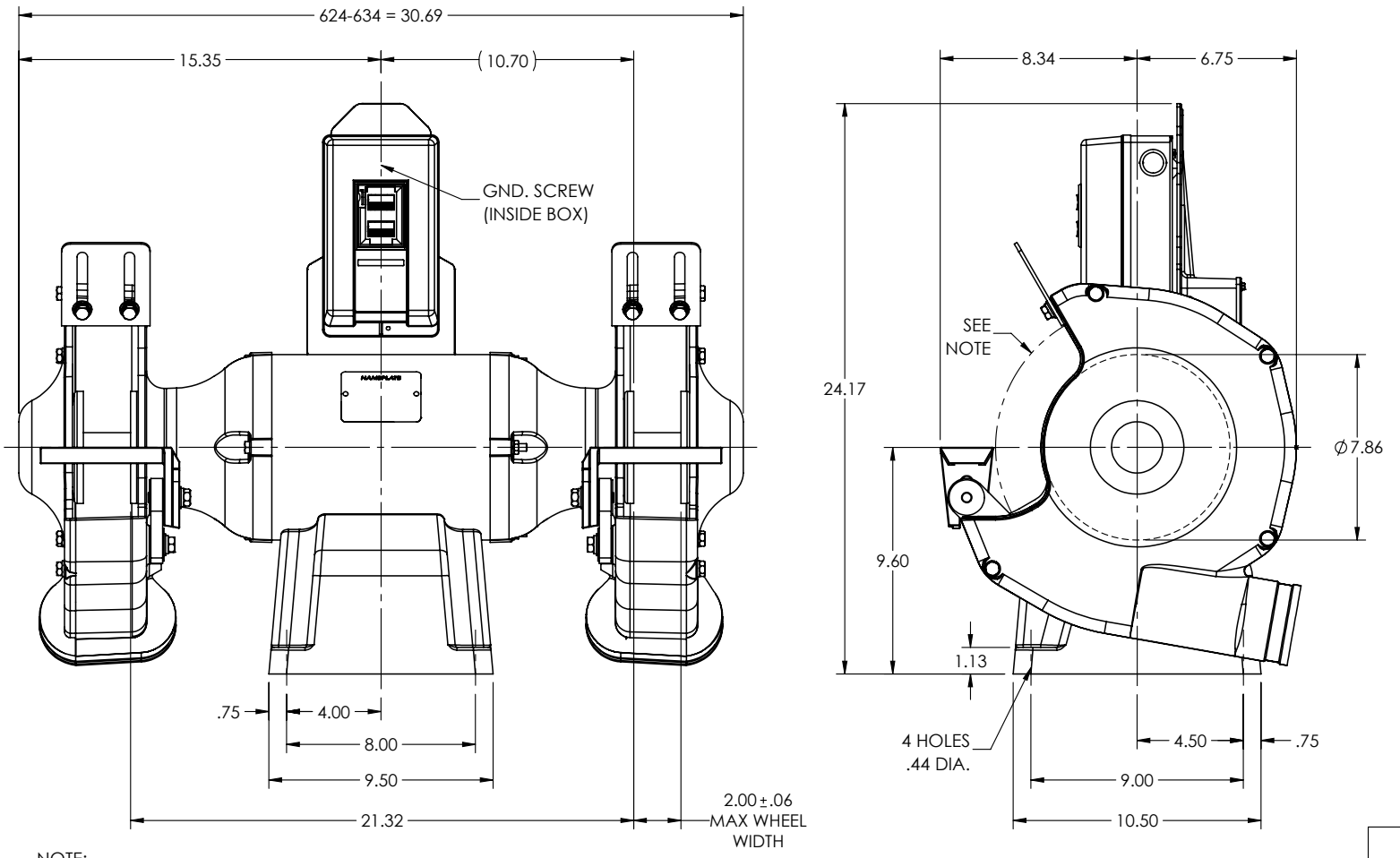

NOTE:
WHEELS SOLD SEPARATELY. SEE CATALOG FOR INFORMATION.

CUSTOMER IS RESPONSIBLE FOR DETERMINING THAT THE PRODUCT WILL PERFORM SUITABLY IN THE INTENDED APPLICATION

REV. DESC: MOVE GROUND SCREW TO TOP OF STARTER			
REV: B	VERSION: 02	REVISED: 01:50:05 10/15/2025	TDR: 000001265308
G2LY0118	MODEL NO. G2LY0118		REF: -
	BY: USEROLI		

BALDOR - RELIANCE®

STD 12" GRINDER 36M FRAME W/EXHAUSTS & MANUAL STARTER

G2LY0118

CD0259

MOTOR

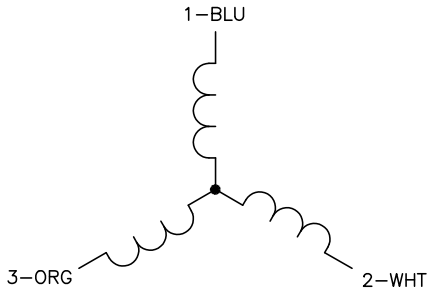

NOTES:

1. GROUND BASE TO BAND.
2. LEAD COLORS ARE OPTIONAL. LEADS MUST ALWAYS BE NUMBERED AS SHOWN.

STARTER BRACKET CONDUIT BOX

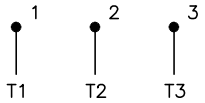

NOTE:

BALDOR LABEL ON STARTER INDICATES FACTORY VOLTAGE.

STARTER

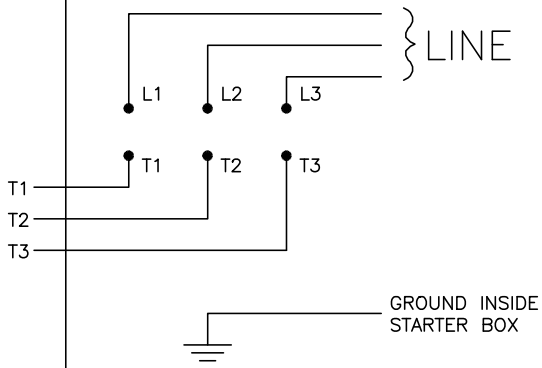

NOTE:

INTERCHANGE ANY TWO LINE LEADS TO REVERSE ROTATION.

CD0259

REV. DESC: REVISE TO SHOW OPTIONAL COLORS			BALDOR ELECTRIC Co.
REV. LTR: B	BY: JLP	REVISED: 05/05/99 11:46	TDR: 0179909
CD0259		FILE: AAA00051766	MDL: –
		MTL: –	3PH, SV, 3 LEAD, GRINDER OR BUFFER W/MANUAL STARTER

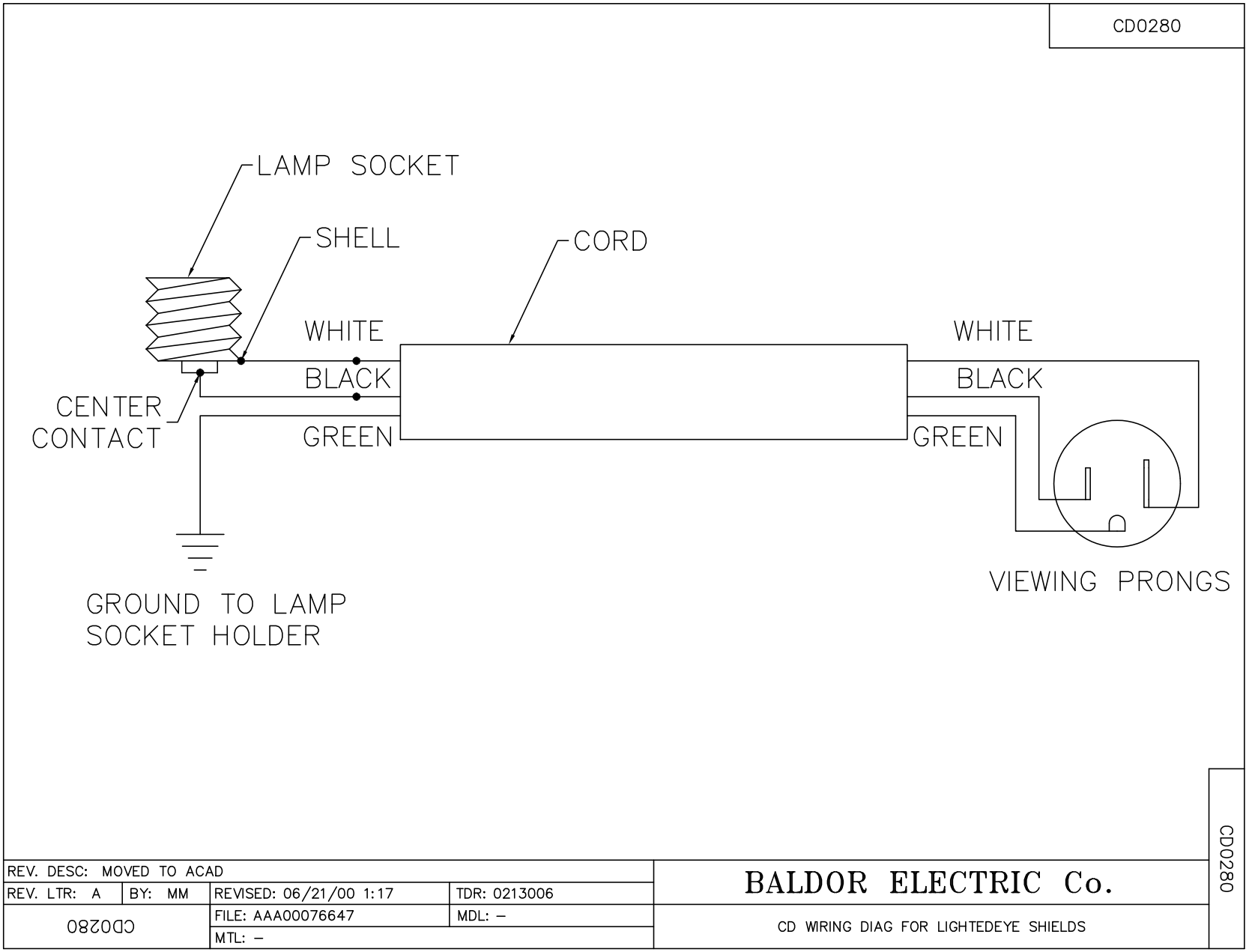
CD0280
LAMP SOCKET
SHELL
CORD
WHITE
BLACK
GREEN
CENTER CONTACT
WHITE
BLACK
GREEN
VIEWING PRONGS
GROUND TO LAMP SOCKET HOLDER
CD0280
REV. DESC: MOVED TO ACAD
REV. LTR: A
BY: MM
REVISED: 06/21/00 1:17
TDR: 0213006
FILE: AAA00076647
MDL: –
MTL: –
CD0280
BALDOR ELECTRIC Co.
CD WIRING DIAG FOR LIGHTEDEYE SHIELDS