ABB BALDOR RELIANCE

Customer information packet

1250

2HP, 1800RPM, 1PH, 60HZ, 3634L, BUFF

Copyright © All product information within this document is subject to ABB Motors and Mechanical Inc. copyright © protection, unless otherwise noted.
11/23/2026 2:39:22 AM

Specifications

Enclosure	TENV
Frame Material	Steel
Frequency	60.00 Hz
	60.00 Hz
Motor Letter Type	Cap Start, Induction Run
Nameplate Output	2
Number of Poles	4
	4
Output @ Frequency	2.000 HP @ 60 HZ
Phase	1
	1
Product Style	GRINDER
Speed	1800 rpm
	1800 rpm
Synchronous Speed @ Frequency	1800 RPM @ 60 HZ
Voltage	115 V
	230 V
Voltage @ Frequency	230.0 V @ 60 HZ
	115.0 V @ 60 HZ
Agency Approvals	UR
Ambient Temperature	40 °C
Base Indicator	Rigid
Bearing Grease Type	Polyrex EM (-20F +300F)
Current @ Voltage	20.000 A @ 115.0 V
	10.000 A @ 230.0 V
Duty Rating	CONT
Feedback Device	NO FEEDBACK
Insulation Class	B
KVA Code	-
Motor Lead Quantity/Wire Size	4 @ 16 AWG
Motor Standards	Other
Motor Type	3634L

Part Detail

Revision	Y
Type	AC
Mech. spec.	G12-120
Base	
Status	PRD/A
Elec. spec.	G2WG0002
Layout	G2LY0120
Eff. date	10-20-2025
CD Diagram	CD0253
Poles	04
Leads	4#16 12" FROM IRON Y
Proprietary	False
Created date	01-01-0001

Mounting Arrangement	F1
Overall Length	39.32 IN
Product Family	Buffer
Service Factor	1.00
Shaft Extension Location	Double Shaft
Shaft Rotation	Fixed Opposite Standard
Shaft Slinger Indicator	No Slinger
Speed Code	Single Speed
Starting Method	Direct on line
Thermal Device - Winding	None
Winding Thermal 1	None
Winding Thermal 2	None

Nameplate

NP3352L				
CAT.NO.	1250			
HP	2	**VOLTS**	115/230	
PHASE	1	**AMPS**	20/10	
HZ	60	**RPM**	1800	
SER.NO				
SPEC.	G12-120A-0002			
BLANK				

Accessories

Part number	Description	Multiplier
GA20	PEDESTAL INDUSTRIAL, CAST IRON 8"-14"	A8
BQ1-015-CC	1PH Brake, NEMA 1,110-125 VAC, 50/60Hz	P1
BQ1-015-CP	1PH Brake, Panel 110-125 VAC, 50/60 Hz	
BQ2-015-CC	1PH Brake,NEMA 1 208-230 VAC,50/60Hz	
BQ2-015-CP	1PH Brake, Panel 208-230 VAC, 50/60 Hz	

AC Induction Motor Performance Data
Record # 21971
Typical performance - not guaranteed values

Winding: G2WG0002-R001	**Type:** 3634L	**Enclosure:** TENV

Nameplate Data				**230 V, 60 Hz: High Voltage Connection**	
Rated Output (HP)			2	**Full Load Torque**	6 LB-FT
Volts			115/230	**Start Configuration**	direct on line
Full Load Amps			20/10	**Breakdown Torque**	14 LB-FT
R.P.M.			1800	**Pull-up Torque**	11.8 LB-FT
Hz	60	**Phase**	1	**Locked-rotor Torque**	14.2 LB-FT
NEMA Design Code	-	**KVA Code**	-	**Starting Current**	58.6 A
Service Factor (S.F.)			1	**No-load Current**	6.04 A
NEMA Nom. Eff.	0	**Power Factor**	0	**Line-line Res. @ 25ºC**	0.997 Ω A Ph 0.665 Ω B Ph
Rating - Duty			40C AMB-CONT	**Temp. Rise @ Rated Load**	

Load Characteristics 230 V, 60 Hz, 2 HP

% of Rated Load	**25**	**50**	**75**	**100**	**125**	**150**
Power Factor	49	64	73	79	82	86
Efficiency	50.6	64.5	68.3	68.7	66.4	64.6
Speed	1782	1770	1756	1739	1720	1696
Line amperes	6.7	7.99	9.76	11.9	14.6	17

ABB Motors and Mechanical Inc.

WINDING # G2WG0002

2 HP 1 PH 60 HZ 1800 RPM 230 V 3634L

Typical performance - not guaranteed values.

TORQUES(LB-FT): PO=14 PU=11.8 LR=14.2 LRA=58.6

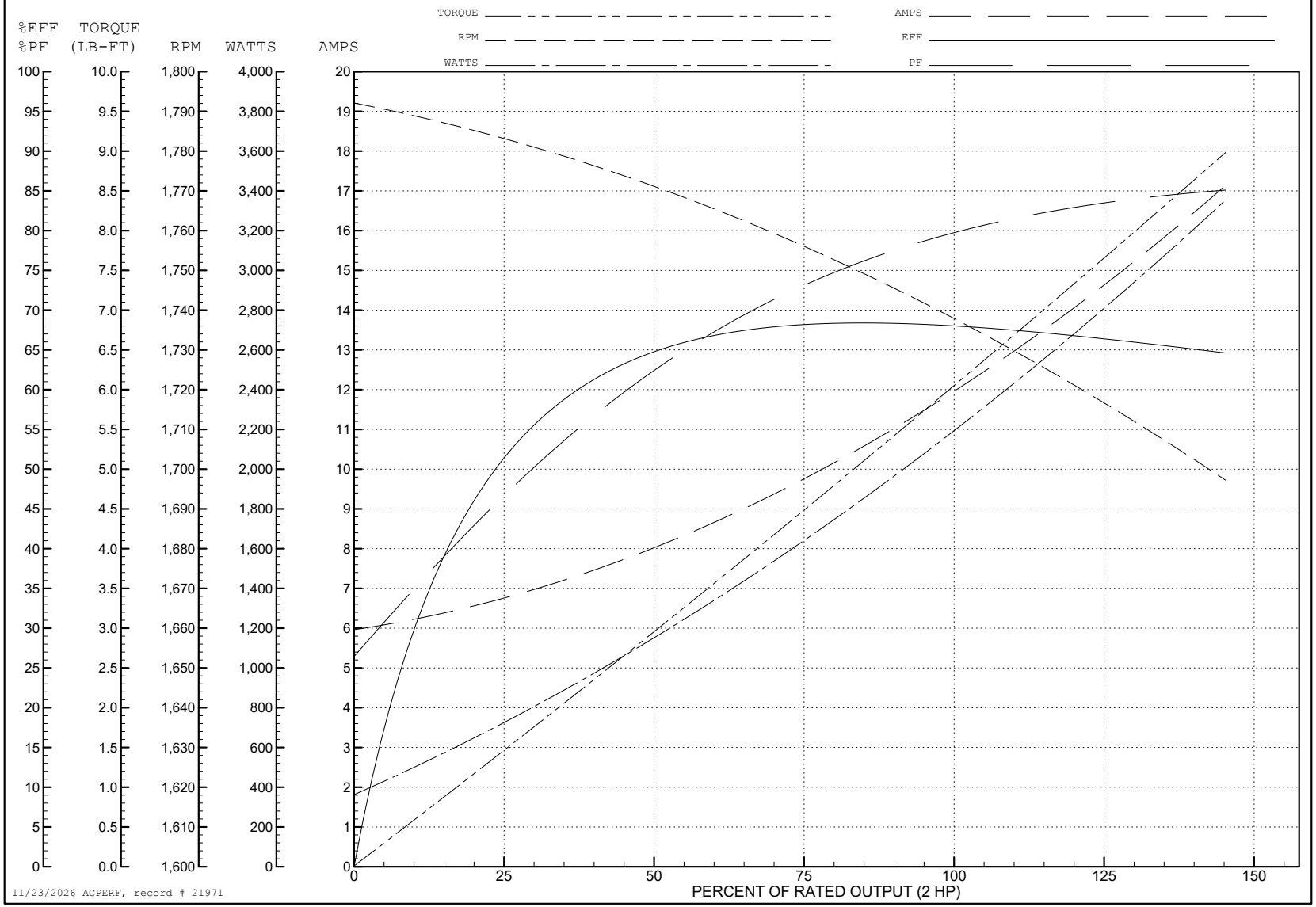

11/23/2026 ACPERF, record # 21971

G2LY0120

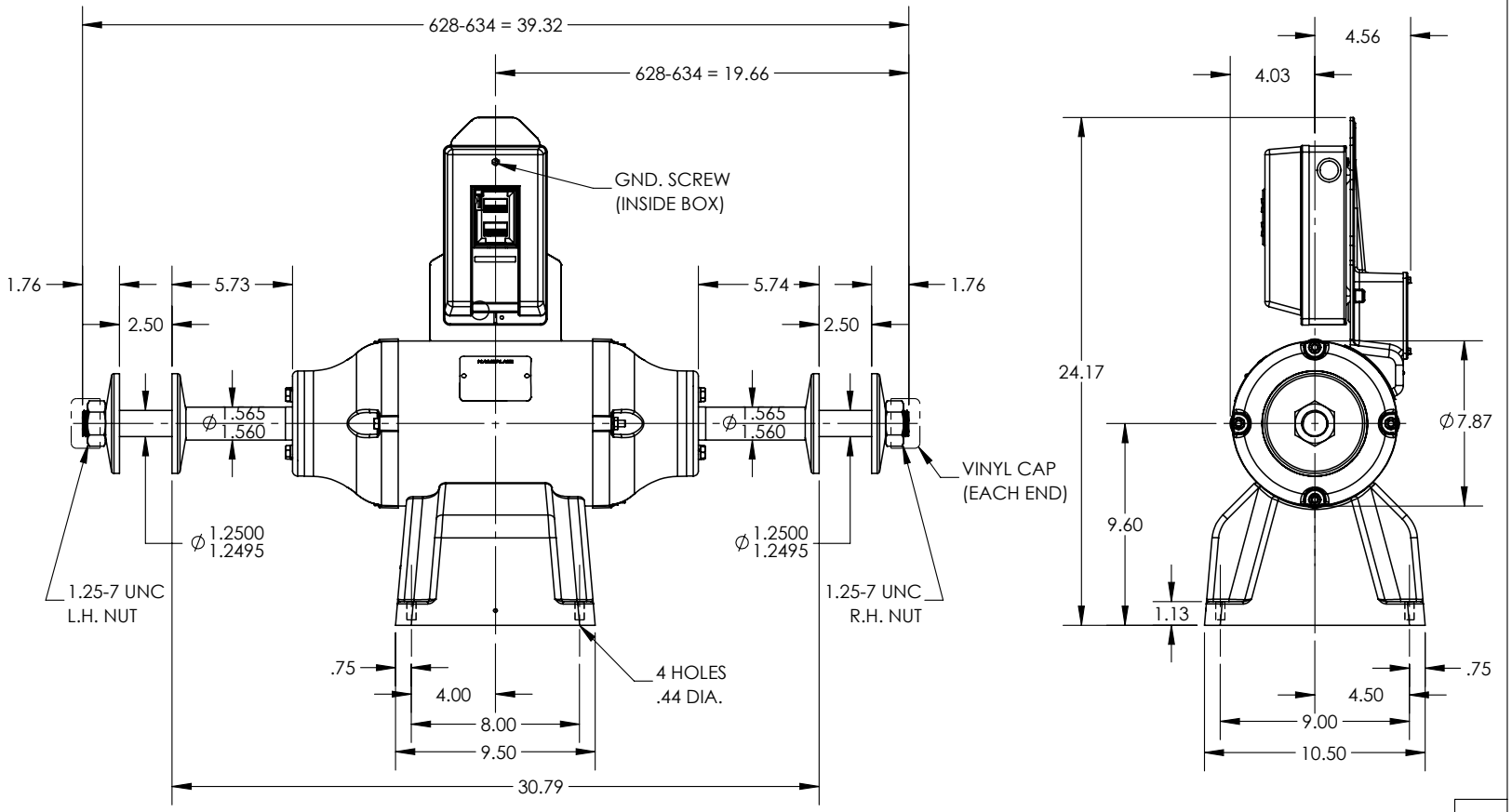

CUSTOMER IS RESPONSIBLE FOR DETERMINING THAT THE PRODUCT WILL PERFORM SUITABLY IN THE INTENDED APPLICATION

REV. DESC: MOVE GROUND SCREW TO TOP OF STARTER			
REV: C	VERSION: 02	REVISED: 02:42:20 10/15/2025	TDR: 000001265308
G2LY0120	MODEL NO. G2LY0120		REF: -
	BY: USEROLI		

BALDOR - RELIANCE®

STD 12" BUFFER 36L W/ MANUAL STARTER

G2LY0120

CD0253

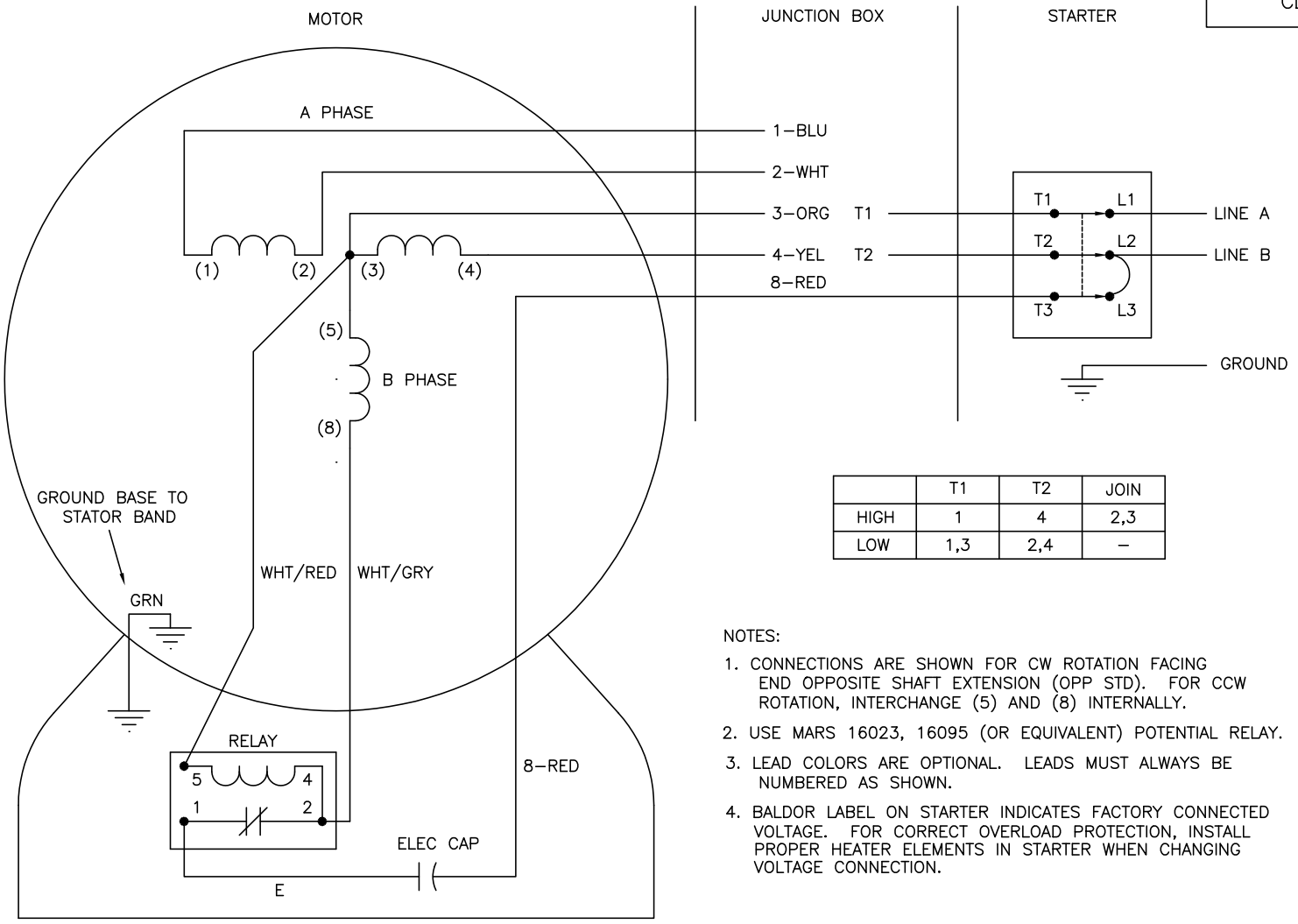

	T1	T2	JOIN
HIGH	1	4	2,3
LOW	1,3	2,4	–

NOTES:

1. CONNECTIONS ARE SHOWN FOR CW ROTATION FACING END OPPOSITE SHAFT EXTENSION (OPP STD). FOR CCW ROTATION, INTERCHANGE (5) AND (8) INTERNALLY.
2. USE MARS 16023, 16095 (OR EQUIVALENT) POTENTIAL RELAY.
3. LEAD COLORS ARE OPTIONAL. LEADS MUST ALWAYS BE NUMBERED AS SHOWN.
4. BALDOR LABEL ON STARTER INDICATES FACTORY CONNECTED VOLTAGE. FOR CORRECT OVERLOAD PROTECTION, INSTALL PROPER HEATER ELEMENTS IN STARTER WHEN CHANGING VOLTAGE CONNECTION.

CD0253

REV. DESC: ADDED NOTE #4, SEE EC09			BALDOR ELECTRIC Co.
REV. LTR: E	BY: JED	REVISED: 09/22/99 11:24	TDR: 0187361
CD0253		FILE: AAA00028149	MDL: –
		MTL: –	TYPE L, DV, FIX, POT. RELAY, MANUAL STARTER, GRINDER