BALDOR®
MOTORS AND DRIVES

ADJUSTABLE SPEED DRIVE

SERIES 15V
Inverter Control

Installation & Operating Manual

7/00 **MN715V**

Table of Contents

Section 1
Quick Start Guide 1-1
Overview 1-1
Quick Start Checklist 1-1
Quick Start Procedure 1-2
Section 2
General Information 2-1
Overview 2-1
CE Compliance 2-1
Limited Warranty 2-2
Safety Notice 2-3
Section 3
Receiving & Installation 3-1
Receiving & Inspection 3-1
Physical Installation 3-1
Control Installation 3-2
Through the Wall Mounting 3-2
Keypad Installation 3-2
Optional Remote Keypad Installation 3-3
Electrical Installation 3-4
System Grounding 3-4
Line Impedance 3-5
Line Reactors 3-5
Load Reactors 3-5
AC Main Circuit 3-6
Power Disconnect 3-6
Protective Devices 3-6
Wire Size and Protection Devices 3-6
AC Line Connections 3-10
Reduced Input Voltage Derating 3-10
380-400VAC Operation 3-10
3 Phase Installation 3-11
Single Phase Input Power Considerations 3-13
Single Phase Control Derating 3-13
Size A and B2 Single Phase Power Installation 3-13
Size C2 Single Phase Power Installation 3-14
Size D Single Phase Power Installation 3-15
Size E Single Phase Power Installation 3-16
Size F Single Phase Power Installation 3-17
Motor Brake Connections 3-18
Motor Connections 3-18
M-Contactor 3-18

Continued on next page.

Optional Dynamic Brake Hardware . . . 3-19
Selection of Operating Mode . . . 3-22
Analog Inputs and Outputs . . . 3-23
Serial Operating Mode . . . 3-24
Keypad Operating Mode . . . 3-25
Standard Run 3 Wire Operating Mode . . . 3-26
15 Speed 2-Wire Operating Mode . . . 3-27
Fan Pump 2 Wire Operating Mode . . . 3-28
Fan Pump 3 Wire Operating Mode . . . 3-29
3 Speed Analog 2 Wire Operating Mode . . . 3-30
3 Speed Analog 3 Wire Operating Mode . . . 3-31
Electronic Pot 2 Wire Operating Mode . . . 3-32
Electronic Pot 3 Wire Operating Mode . . . 3-33
Process Operating Mode . . . 3-34
External Trip Input . . . 3-35
Opto-Isolated Inputs . . . 3-35
Opto-Isolated Outputs . . . 3-36
Relay Outputs . . . 3-37
Pre-Operation Checklist . . . 3-38
Power Up Procedure . . . 3-38
Section 4
Programming and Operation . . . 4-1
Overview . . . 4-1
Display Mode . . . 4-2
Adjusting Display Contrast . . . 4-2
Display Screens . . . 4-2
Program Mode . . . 4-3
Parameter Blocks Access for Programming . . . 4-3
Changing Parameter Values when Security Code Not Used . . . 4-4
Reset Parameters to Factory Settings . . . 4-5
Initialize New Software EEPROM . . . 4-6
Operation Examples . . . 4-7
Operating the Control from the Keypad . . . 4-7
Accessing the Keypad JOG Command . . . 4-7
Speed Adjustment using Local Speed Reference . . . 4-8
Speed Adjustment Using Arrow Keys . . . 4-8
Security System Changes . . . 4-9
Changing Parameter Values with a Security Code in Use . . . 4-10
Security System Access Timeout Parameter Change . . . 4-11
Parameter Definitions . . . 4-12

Continued on next page.

Section 5
Troubleshooting 5-1
No Keypad Display - Display Contrast Adjustment 5-1
How to Access Diagnostic Information 5-2
Initialize New Software EEPROM 5-2
How to Access the Fault Log 5-3
How to Clear the Fault Log 5-3
Initialize New Software EEPROM 5-4
Power Base ID 5-5
Electrical Noise Considerations 5-9
Relay and Contactor Coils 5-9
Wires between Controls and Motors 5-9
Special Drive Situations 5-10
Control Enclosures 5-10
Special Motor Considerations 5-10
Analog Signal Wires 5-10
Section 6
Specifications and Product Data 6-1
Specifications: 6-1
Operating Conditions: 6-1
Keypad Display: 6-1
Control Specifications: 6-2
Analog Inputs: 6-2
Analog Outputs: 6-3
Digital Inputs: 6-3
Digital Outputs: 6-3
Diagnostic Indications: 6-3
Ratings 6-4
Terminal Tightening Torque Specifications 6-5
Mounting Dimensions 6-7
Size A Control 6-7
Size B2 Control 6-9
Size C2 Control 6-10
Size D Control 6-12
Size E Control 6-13
Size F Control 6-16
Size G Control 6-19
Size G+ Control 6-20
Size H Control 6-21

Continued on next page.

Appendix A A-1
Dynamic Braking (DB) Hardware A-1
RGA Assemblies A-3
RBA Assemblies A-4
RTA Assemblies A-5
Appendix B B-1
Parameter Values B-1
Appendix C C-1
Remote Keypad Mounting Template C-2

Section 1
Quick Start Guide

Overview

If you are an experienced user of Baldor controls, you are probably already familiar with the keypad programming and keypad operation methods. If so, this quick start guide has been prepared for you. This procedure will help get your system up and running in the keypad mode quickly and will allow motor and control operation to be verified. This procedure assumes that the Control, Motor and Dynamic Brake hardware are correctly installed (see Section 3 for procedures) and that you have an understanding of the keypad programming & operation procedures. It is not necessary to wire the terminal strip to operate in the Keypad mode (Section 3 describes terminal strip wiring procedures). The quick start procedure is as follows:

1. Read the Safety Notice and Precautions in section 2 of this manual.
2. Mount the control. Refer to Section 3, “Physical Location” procedure.
3. Connect AC power. Refer to Section 3 “AC Line Connections”.
4. Connect the motor. Refer to Section 3, “Motor Connections”.
5. Install Dynamic brake hardware, if required. Refer to Section 3, “Optional Dynamic Brake Hardware”.
6. Plug in the keypad. Refer to Section 3, “Keypad Installation” procedure.

Quick Start Checklist

Check of electrical items.

⚠ **CAUTION: After completing the installation but before you apply power, be sure to check the following items.**

1. Verify AC line voltage at source matches control rating.
2. Inspect all power connections for accuracy, workmanship and tightness as well as compliance to codes.
3. Verify control and motor are grounded to each other and the control is connected to earth ground.
4. Check all signal wiring for accuracy.
5. Be certain all brake coils, contactors and relay coils have noise suppression. This should be an R-C filter for AC coils and reverse polarity diodes for DC coils. MOV type transient suppression is not adequate.

⚠ **WARNING: Make sure that unexpected operation of the motor shaft during start up will not cause injury to personnel or damage to equipment.**

Check of Motors and Couplings

1. Verify freedom of motion of motor shaft.
2. Verify that the motor coupling is tight without backlash.
3. Verify the holding brakes if any, are properly adjusted to fully release and set to the desired torque value.

Quick Start Procedure

The following procedure will help get your system up and running in the keypad mode quickly, and will allow you to prove the motor and control operation. This procedure assumes that the Control, Motor and Dynamic Brake hardware are correctly installed (see Section 3 for procedures) and that you have an understanding of the keypad programming & operation procedures.

Initial Conditions

Be sure the Control (Physical Installation & AC Line Connections), Motor and Dynamic Brake hardware are wired according to the procedures in Section 3 of this manual. Become familiar with the keypad programming and keypad operation of the control as described in Section 4 of this manual.

1. Verify that any enable inputs to J4-8 are open.
2. Turn power on. Be sure no faults are displayed on the keypad display.
3. Set the Level 1 Input block, Operating Mode to “Keypad”.
4. Be sure the Level 2 Protection block, Local Enable INP parameter is OFF and the Level 2 Protection block, External Trip parameter is OFF.
5. Set the Level 2 Output Limits block, “Operating Zone” parameter as desired (STD VAR TQ or QUIET VAR TQ).
6. Set the Level 2 Output Limits block, “MIN Output FREQ” parameter.
7. Set the Level 2 Output Limits block, “MAX Output FREQ” parameter.

Note: JP1 is in position 2–3 as shipped from the factory (<120Hz operation). For operation with MAX Output FREQ >120Hz, change the position of JP1 to pins 1–2. Refer to Section 3 for jumper location.

8. If the desired peak current limit setting is different than is automatically set by the Operating Zone, set the Level 2 Output Limits block, “PK Current Limit” parameter as desired.
9. Enter the following motor data in the Level 2 Motor Data block parameters:
   Motor Voltage (input)
   Motor Rated Amps (FLA)
   Motor Rated Speed (base speed)
   Motor Rated Frequency
   Motor Mag Amps (no load current)
10. If External Dynamic Brake hardware is used, set the Level 2 Brake Adjust block, “Resistor Ohms” and “Resistor Watts” parameters.
11. Set the Level 1 V/HZ Boost block, “V/HZ Profile” parameter for the correct V/Hz ratio for your application.
12. If the load is a high initial starting torque type, the torque boost and Accel time may need to be increased. Set the Level 1 V/HZ Boost block, “Torque Boost” and the Level 1 Accel/Decel Rate block, “ACCEL TIME #1” as required.
13. Select and program additional parameters to suit your application.

The control is now ready for use in keypad mode or the terminal strip may be wired and the programming changed for another operating mode.

Section 2
General Information

Overview

The Baldor Series 15H control is a PWM inverter motor control. The control operates by converting AC line power into fixed DC power. The DC power is then pulse width modulated into synthesized three-phase AC line voltage for the motor. In this way, the control converts the fixed input frequency to variable output frequency to cause the motor to have variable speed operation.

The rated horsepower of the control is based on a NEMA design B four pole motor and 60Hz operation at nominal rated input voltage. If any other type of motor is used, or input voltage other than 230, 460 or 575 VAC is applied to the input terminals, the control should be sized to the motor using the rated current of the motor.

The Baldor Series 15H control may be used in many different applications. It may be programmed by the user to operate in four different operating zones; standard constant torque, standard variable torque, quiet constant torque or quiet variable torque. It can also be configured to function in a number of operating modes for custom operation.

It is the responsibility of the user to determine the optimum operating zone and operating mode for the application. These choices are programmed using the keypad as explained in the programming section of this manual.

CE Compliance

A custom unit may be required, contact Baldor. Compliance to Directive 89/336/EEC is the responsibility of the system integrator. A control, motor and all system components must have proper shielding grounding and filtering as described in MN1383. Please refer to MN1383 for installation techniques for CE compliance.

Limited Warranty

For a period of two (2) years from the date of original purchase, BALDOR will repair or replace without charge controls and accessories which our examination proves to be defective in material or workmanship. This warranty is valid if the unit has not been tampered with by unauthorized persons, misused, abused, or improperly installed and has been used in accordance with the instructions and/or ratings supplied. This warranty is in lieu of any other warranty or guarantee expressed or implied. BALDOR shall not be held responsible for any expense (including installation and removal), inconvenience, or consequential damage, including injury to any person or property caused by items of our manufacture or sale. (Some states do not allow exclusion or limitation of incidental or consequential damages, so the above exclusion may not apply.) In any event, BALDOR's total liability, under all circumstances, shall not exceed the full purchase price of the control. Claims for purchase price refunds, repairs, or replacements must be referred to BALDOR with all pertinent data as to the defect, the date purchased, the task performed by the control, and the problem encountered. No liability is assumed for expendable items such as fuses.

Goods may be returned only with written notification including a BALDOR Return Authorization Number and any return shipments must be prepaid.

Safety Notice:

This equipment contains voltages that may be as great as 1000 volts! Electrical shock can cause serious or fatal injury. Only qualified personnel should attempt the start–up procedure or troubleshoot this equipment.

This equipment may be connected to other machines that have rotating parts or parts that are driven by this equipment. Improper use can cause serious or fatal injury. Only qualified personnel should attempt the start–up procedure or troubleshoot this equipment.

PRECAUTIONS:

⚠ **WARNING: Do not touch any circuit board, power device or electrical connection before you first ensure that power has been disconnected and there is no high voltage present from this equipment or other equipment to which it is connected. Electrical shock can cause serious or fatal injury. Only qualified personnel should attempt the start–up procedure or troubleshoot this equipment.**

⚠ **WARNING: Be sure that you are completely familiar with the safe operation of this equipment. This equipment may be connected to other machines that have rotating parts or parts that are controlled by this equipment. Improper use can cause serious or fatal injury. Only qualified personnel should attempt the start–up procedure or troubleshoot this equipment.**

⚠ **WARNING: Do not use motor overload relays with an automatic reset feature. These are dangerous since the process may injure someone if a sudden or unexpected automatic restart occurs. If manual reset relays are not available, disable the automatic restart feature using external control wiring.**

⚠ **WARNING: This unit has an automatic restart feature that will start the motor whenever input power is applied and a RUN (FWD or REV) command is issued and maintained. If an automatic restart of the motor could cause injury to personnel, the automatic restart feature should be disabled by changing the "Restart Auto/Man" parameter to MANUAL.**

⚠ **WARNING: Be sure the system is properly grounded before applying power. Do not apply AC power before you ensure that grounds are connected. Electrical shock can cause serious or fatal injury.**

⚠ **WARNING: Do not remove cover for at least five (5) minutes after AC power is disconnected to allow capacitors to discharge. Electrical shock can cause serious or fatal injury.**

⚠ **WARNING: Improper operation of control may cause violent motion of the motor shaft and driven equipment. Be certain that unexpected motor shaft movement will not cause injury to personnel or damage to equipment. Peak torque of several times the rated motor torque can occur during control failure.**

⚠ **WARNING: Motor circuit may have high voltage present whenever AC power is applied, even when motor is not rotating. Electrical shock can cause serious or fatal injury.**

Continued on next page.

⚠ **WARNING: Dynamic brake resistors may generate enough heat to ignite combustible materials. Keep all combustible materials and flammable vapors away from brake resistors.**

⚠ **Caution: Suitable for use on a circuit capable of delivering not more than the RMS symmetrical short circuit amperes listed here at rated voltage.**

Horsepower	RMS Symmetrical Amperes
1–50	5,000
51–200	10,000
201–400	18,000
401–600	30,000
601–900	42,000

⚠ **Caution: Do not supply any power on the External Trip (motor thermostat) leads at J4-16 or J4-17 as the control may be damaged. Use a dry contact type that requires no external power to operate.**

⚠ **Caution: Disconnect motor leads (T1, T2 and T3) from control before you perform a "Megger" test on the motor. Failure to disconnect motor from the control will result in extensive damage to the control. The control is tested at the factory for high voltage / leakage resistance as part of Underwriter Laboratory requirements.**

⚠ **Caution: Do not connect AC power to the Motor terminals T1, T2 and T3. Connecting AC power to these terminals may result in damage to the control.**

⚠ **Caution: Baldor recommends not using "Grounded Leg Delta" transformer power leads that may create ground loops and provide unstable power to the motor controller. Instead, we recommend using a four wire Wye.**

⚠ **Caution: If the DB hardware mounting is in any position other than vertical, the DB hardware must be derated by 35% of its rated capacity.**

Section 3
Receiving & Installation

Receiving & Inspection

When you receive your control, there are several things you should do immediately.

1. Observe the condition of the shipping container and report any damage immediately to the commercial carrier that delivered your control.
2. Verify that the control you received is the same as listed on your purchase order.
3. If the control is to be stored for several weeks before use, be sure that it is stored in a location that conforms to published storage specifications. (Refer to Section 6 of this manual).

Physical Installation

The mounting location of the control is important. It should be installed in an area that is protected from direct sunlight, corrosives, harmful gases or liquids, dust, metallic particles, and vibration.

Several other factors should be carefully evaluated when selecting a location for installation:

1. For effective cooling and maintenance, the control should be mounted on a smooth, non-flammable vertical surface. Table 3-1 lists the Watts Loss ratings for enclosure sizing.
2. At least two inches clearance must be provided on all sides for airflow.
3. Front access must be provided to allow the control cover to be opened or removed for service and to allow viewing of the Keypad Display.
4. **Altitude derating.** Up to 3300 feet (1000 meters), no derating required. Above 3300 feet, derate peak output current by 2% for each 1000 feet above 3300 feet.
5. **Temperature derating.** Up to 40°C, no derating required. Above 40°C, derate peak output current by 2% per °C above 40°C.
   Maximum ambient is 55°C.

Table 3-1 Series 15V Watts Loss Ratings

Enclosure Size	230VAC		460VAC		575VAC	
	2.5kHz PWM	8.0kHz PWM	2.5kHz PWM	8.0kHz PWM	2.5kHz PWM	8.0kHz PWM
A and B2	14 Watts/ Amp	17 Watts/ Amp	17 Watts/ Amp	26 Watts/ Amp	18 Watts/ Amp	28 Watts/ Amp
C2, D, E and F	12 Watts/ Amp	15 Watts/ Amp	15 Watts/ Amp	23Watts/ Amp	19Watts/ Amp	29 Watts/ Amp
G			15 Watts/ Amp		19Watts/ Amp	
H			15 Watts/ Amp			

Control Installation

The control must be securely fastened to the mounting surface at the mounting holes.

Shock Mounting

If the control will be subjected to levels of shock greater than 1G or vibration greater than 0.5G at 10 to 60Hz, the control should be shock mounted.

Through the Wall Mounting

Control sizes A, B2, C2, E and F are designed for panel or through the wall installation. To mount a control through the wall, a Through the Wall mounting kit must be purchased (except for B2 and C2 sizes). These kits are:

Kit No.	Description
KT0000A00	Size A control through the wall mounting kit.
V0083991	Size E control through the wall mounting kit.
V0084001	Size F control through the wall mounting kit.

Refer to Section 6 of this manual for drawings and dimensions of the through the wall mounting kits.

Keypad Installation

Procedure:

1. Refer to the Remote Keypad Installation procedure and mount the keypad.
2. Connect the keypad cable to the keypad connector of the main control board.

Optional Remote Keypad Installation The keypad may be remotely mounted using optional Baldor keypad extension cable. Keypad assembly (white - DC00005A-01; gray - DC00005A-02) comes complete with the screws and gasket required to mount it to an enclosure. When the keypad is properly mounted to a NEMA Type 4X indoor enclosure, it retains the Type 4X indoor rating.

Tools Required:

- Center punch, tap handle, screwdrivers (Phillips and straight) and crescent wrench.
- 8-32 tap and #29 drill bit (for tapped mounting holes) or #19 drill (for clearance mounting holes).
- 1-$^{1}/_{4}$″ standard knockout punch (1-$^{11}/_{16}$″ nominal diameter).
- RTV sealant.
- (4) 8-32 nuts and lock washers.
- Extended 8-32 screws (socket fillister) are required if the mounting surface is thicker than 12 gauge and is not tapped (clearance mounting holes).
- Remote keypad mounting template. A tear out copy is provided at the end of this manual for your convenience. (Photo copy or tear out.)

Mounting Instruction: **For tapped mounting holes**

1. Locate a flat 4″ wide x 5.5″ minimum high mounting surface. Material should be sufficient thickness (14 gauge minimum).
2. Place the template on the mounting surface or mark the holes as shown.
3. Accurately center punch the 4 mounting holes (marked A) and the large knockout (marked B).
4. Drill four #29 mounting holes (A). Thread each hole using an 8-32 tap.
5. Locate the 1-$^{1}/_{4}$″ knockout center (B) and punch using the manufacturers instructions.
6. Debur knockout and mounting holes making sure the panel stays clean and flat.
7. Apply RTV to the 4 holes marked (A).
8. Assemble the keypad to the panel. Use 8–32 screws, nuts and lock washers.
9. From the inside of the panel, apply RTV over each of the four mounting screws and nuts. Cover a $^{3}/_{4}$″ area around each screw while making sure to completely encapsulate the nut and washer.

Mounting Instructions: **For clearance mounting holes**

1. Locate a flat 4″ wide x 5.5″ minimum high mounting surface. Material should be sufficient thickness (14 gauge minimum).
2. Place the template on the mounting surface or mark the holes as shown on the template.
3. Accurately center punch the 4 mounting holes (marked A) and the large knockout (marked B).
4. Drill four #19 clearance holes (A).
5. Locate the 1-$^{1}/_{4}$″ knockout center (B) and punch using the manufacturers instructions.
6. Debur knockout and mounting holes making sure the panel stays clean and flat.
7. Apply RTV to the 4 holes marked (A).
8. Assemble the keypad to the panel. Use 8–32 screws, nuts and lock washers.
9. From the inside of the panel, apply RTV over each of the four mounting screws and nuts. Cover a $^{3}/_{4}$″ area around each screw while making sure to completely encapsulate the nut and washer.

Electrical Installation

To make electrical connections, use UL listed closed loop connectors that are of appropriate size for wire gauge being used. Connectors are to be installed using crimp tool specified by the manufacturer of the connector. Only Class 1 wiring should be used.

Baldor Series H controls feature UL approved adjustable motor overload protection suitable for motors rated at no less than 50% of the output rating of the control. Other governing agencies such as NEC may require separate over-current protection. The installer of this equipment is responsible for complying with the National Electric Code and any applicable local codes which govern such practices as wiring protection, grounding, disconnects and other current protection.

The Baldor Series 15V control requires a minimum line impedance of 3% (voltage drop at the input is 3% when the control draws rated input current) for all sizes except B2 and C2. Size B2 and C2 controls require a 1% line impedance. If the incoming power line has less than 3% impedance, a 3 phase line reactor can be used to provide the needed impedance in most cases. Line reactors are optional and are available from Baldor.

System Grounding

Baldor Controls are designed to be powered from standard three phase lines that are electrically symmetrical with respect to ground. System grounding is an important step in the overall installation to prevent problems. The recommended grounding method is shown in Figure 3-1.

Figure 3-1 Recommended System Grounding

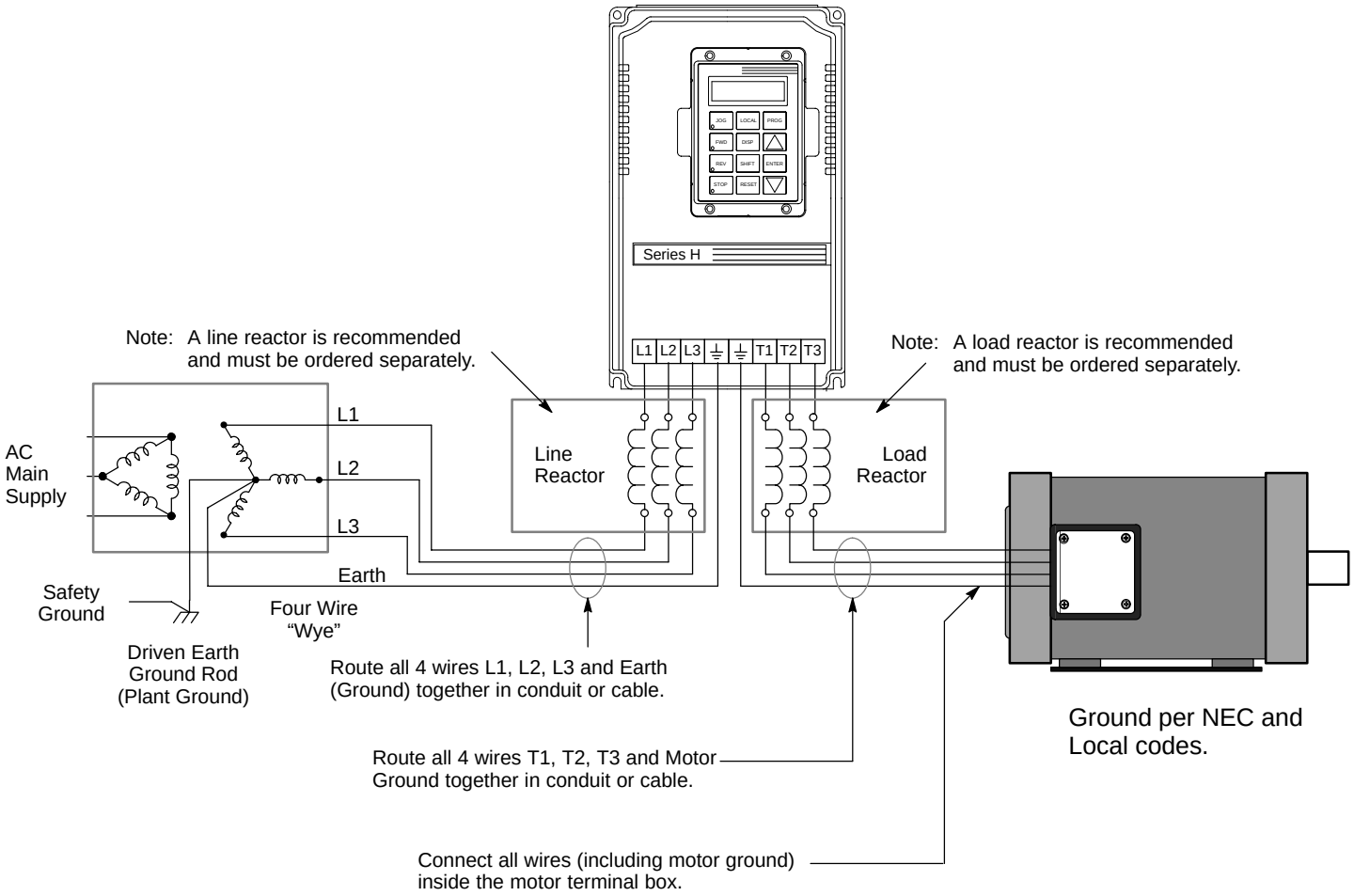

Ungrounded Distribution System

With an ungrounded power distribution system it is possible to have a continuous current path to ground through the MOV devices. To avoid equipment damage, an isolation transformer with a grounded secondary is recommended. This provides three phase AC power that is symmetrical with respect to ground.

Input Power Conditioning

Baldor controls are designed for direct connection to standard three phase lines that are electrically symmetrical with respect to ground. Certain power line conditions must be avoided. An AC line reactor or an isolation transformer may be required for some power conditions.

- If the feeder or branch circuit that provides power to the control has permanently connected power factor correction capacitors, an input AC line reactor or an isolation transformer must be connected between the power factor correction capacitors and the control.
- If the feeder or branch circuit that provides power to the control has power factor correction capacitors that are switched on line and off line, the capacitors must not be switched while the control is connected to the AC power line. If the capacitors are switched on line while the control is still connected to the AC power line, additional protection is required. TVSS (Transient Voltage Surge Suppressor) of the proper rating must be installed between the AC line reactor or an isolation transformer and the AC input to the control.

Line Impedance

The Baldor control requires a minimum line impedance. If the impedance of the incoming power does not meet the requirement for the control, a 3 phase line reactor can be used to provide the needed impedance in most cases. Line reactors are optional and are available from Baldor.

Control Size	A, D, E	B2, C2, F, G
Line Impedance Required	**3%**	**1%**

The input impedance of the power lines can be determined as follows:

Measure the line to line voltage at no load and at full rated load.
Use these measured values to calculate impedance as follows:

$$\%\text{Impedance} = \frac{(\text{Volts}_{\text{No Load Speed}} - \text{Volts}_{\text{Full Load Speed}})}{(\text{Volts}_{\text{No Load Speed}})} \times 100$$

Line Reactors

Three phase line reactors are available from Baldor. The line reactor to order is based on the full load current of the motor (FLA). If providing your own line reactor, use the following formula to calculate the minimum inductance required.

$$L = \frac{(V_{L-L} \times 0.03)}{(I \times \sqrt{3} \times 377)}$$

Where:		
	L	Minimum inductance in Henries.
	V_{L-L}	Input volts measured line to line.
	0.03	Desired percentage of input impedance.
	I	Input current rating of control.
	377	Constant used with 60Hz power. Use 314 if input power is 50Hz.

Load Reactors

Line reactors may be used at the control output to the motor. When used this way, they are called Load Reactors. Load reactors serve several functions that include:

- Protect the control from a short circuit at the motor.
- Limit the rate of rise of motor surge currents.
- Slowing the rate of change of power the control delivers to the motor.

Load reactors should be installed as close to the control as possible. Selection should be based on the motor nameplate FLA value.

AC Main Circuit

Power Disconnect

A power disconnect should be installed between the input power service and the control for a fail safe method to disconnect power. The control will remain in a powered-up condition until all input power is removed from the control and the internal bus voltage is depleted.

Protective Devices

Recommended fuse sizes are based on the following:
115% of maximum continuous current for time delay.
150% of maximum continuous current for Fast or Very Fast action.

Note: These general size recommendations do not consider harmonic currents or ambient temperatures greater than 40°C.

Be sure a suitable input power protection device is installed. Use the recommended circuit breaker or fuses listed in tables 3-2 through NO TAG (Wire Size and Protection Devices). Input and output wire size is based on the use of copper conductor wire rated at 75 °C. The table is specified for NEMA B motors.

Circuit Breaker: **1 phase**, thermal magnetic.
Equal to GE type THQ or TEB for 230VAC

3 phase, thermal magnetic.
Equal to GE type THQ or TEB for 230VAC or
Equal to GE type TED for 460VAC and 575VAC.

Fast Action Fuses: 230VAC, Buss KTN
460VAC, Buss KTS to 600A (KTU for 601 to 1200A)
575VAC, Buss KTS TO 600A (KTU for 601 to 1200A)

Very Fast Action: 230VAC, Buss JJN
460VAC, Buss JJS
575VAC, Buss JJS

Time Delay Fuses: 230VAC, Buss FRN
460VAC, Buss FRS to 600A (KTU for 601 to 1200A)
575VAC, Buss FRS to 600A (KLU for 601 to 1200A)

Wire Size and Protection Devices

Table 3-2 230VAC Controls (3 Phase) Wire Size and Protection Devices

Control Rating		Input Breaker (Amps)	Input Fuse (Amps)		Wire Gauge	
Amps	HP		Fast Acting	Time Delay	AWG	mm^2
3	0.75	7	5	4	14	2.5
4	1	7	6	5	14	2.5
7	2	15	12	9	14	2.5
10	3	15	15	12	14	2.5
16	5	20	25	20	12	3.31
22	7.5	30	35	30	10	5.26
28	10	40	45	35	8	8.37
42	15	60	70	60	6	13.3
54	20	70	80	70	6	13.3
68	25	90	100	90	4	21.2
80	30	100	125	110	3	26.7
104	40	150	175	150	1	42.4
130	50	175	200	175	1/0	53.5
145	60	200	225	200	2/0	67.4
192	75	250	300	250	4/0	107.0

Note: All wire sizes are based on 75°C copper wire. Higher temperature smaller gauge wire may be used per NEC and local codes. Recommended fuses/breakers are based on 40°C ambient, maximum continuous control output current and no harmonic current.

Table 3-3 460VAC Controls (3 Phase) Wire Size and Protection Devices

Control Rating		Input Breaker (Amps)	Input Fuse (Amps)		Wire Gauge	
Amps	HP		Fast Acting	Time Delay	AWG	mm^2
2	0.75	3	2	2	14	2.5
2	1	3	3	2.5	14	2.5
4	2	7	5	4.5	14	2.5
5	3	7	8	6.3	14	2.5
8	5	15	12	10	14	2.5
11	7.5	15	17.5	15	14	2.5
14	10	20	20	17.5	12	3.31
21	15	30	30	25	10	5.26
27	20	40	40	35	10	5.26
34	25	50	50	45	8	8.37
40	30	50	60	50	8	8.37
52	40	70	80	70	6	13.3
65	50	90	100	90	4	21.2
77	60	100	125	100	3	26.7
96	75	125	150	125	2	33.6
124	100	175	200	175	1/0	53.5
156	125	200	250	200	2/0	67.4
180	150	225	300	250	3/0	85.0
240	200	300	350	300	(2) 2/0	(2) 67.4
302	250	400	450	400	(2) 4/0	(2) 107.0
361	300	450	600	450	(3) 2/0	(3) 67.4
414	350	500	650	500	(3) 3/0	(3) 85.0
477	400	600	750	600	(3) 4/0	(3) 107.0
515	450	650	800	700	(3) 250MCM	(3) 127.0
590	500	750	900	800	(3) 300MCM	(3) 152.0

Note: All wire sizes are based on 75°C copper wire. Higher temperature smaller gauge wire may be used per NEC and local codes. Recommended fuses/breakers are based on 40°C ambient, maximum continuous control output current and no harmonic current.

Table 3-4 575VAC Controls (3 Phase) Wire Size and Protection Devices

Control Rating		Input Breaker (Amps)	Input Fuse (Amps)		Wire Gauge	
Amps	HP		Fast Acting	Time Delay	AWG	mm^2
1.1	0.75	3	2	1.5	14	2.5
1.4	1	3	2.5	2	14	2.5
2.7	2	7	4	3.5	14	2.5
3.9	3	7	6	5	14	2.5
6.1	5	15	10	8	14	2.5
9.0	7.5	15	15	12	14	2.5
11	10	15	17.5	15	14	2.5
17	15	25	30	25	12	3.31
22	20	30	35	30	10	5.26
27	25	40	40	35	10	5.26
32	30	40	50	40	8	8.37
41	40	60	60	50	8	8.37
52	50	70	80	70	6	13.3
62	60	80	100	80	6	13.3
77	75	100	125	100	4	21.2
99	100	125	150	125	3	26.7
125	125	175	200	175	1/0	53.5
144	150	200	225	200	2/0	67.4
192	200	250	300	250	4/0	107.0
242	250	300	350	300	(2) 2/0	(2) 67.4
289	300	400	450	400	(2) 3/0	(2) 85.0
336	350	450	500	450	(3) 2/0	(3) 67.4
382	400	500	600	500	(3) 3/0	(3) 85.0
412	450	500	650	500	(3) 3/0	(3) 85.0
472	500	600	750	600	(3) 4/0	(3) 107.0

Note: All wire sizes are based on 75°C copper wire. Higher temperature smaller gauge wire may be used per NEC and local codes. Recommended fuses/breakers are based on 40°C ambient, maximum continuous control output current and no harmonic current.

Figure 3-2 Series 15V Control

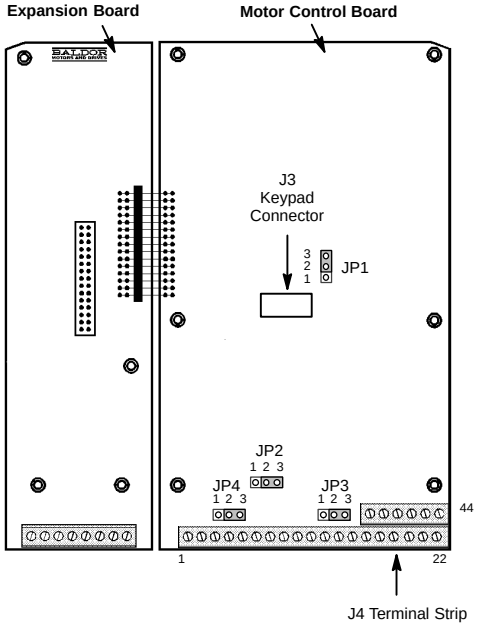

	J4		
Analog GND	1		
Analog Input 1	2		
Pot Reference	3		
Analog Input +2	4		
Analog Input –2	5		
Analog Out 1	6		
Analog Out 2	7		
Input 1	8		
Input 2	9		
Input 3	10		
Input 4	11		
Input 5	12		
Input 6	13		
Input 7	14		
Input 8	15		
Input 9	16		
Opto In Common	17	39	+24VDC
Digital Out Common	18	40	Opto In Power
Digital Out #1	19	41	Digital Out #1 Return
Digital Out #2	20	42	Digital Out #2 Return
Relay Out #1	21	43	Relay Out #1 Return
Relay Out #2	22	44	Relay Out #2 Return

J4-39 & 40 Jumper as shown to power the opto inputs from the internal +24VDC supply.

Note: J4-18 and 41 are connected together on the control circuit board.

See recommended Terminal Tightening Torques in Section 6.

Table 3-5 Control Board Jumpers

Jumper	Jumper Position	Description of Jumper Position Setting
JP1	1–2	400 Hz Maximum Output Frequency.
	2–3	120 Hz Maximum Output Frequency. (Factory Setting)
JP2	1–2	4–20mA Speed Command Signal.
	2–3	0-5 or 0-10VDC Speed Command Signal. (Factory Setting)
JP3	1–2	Relay1 Normally Open (N.O.) contact.
	2–3	Relay1 Normally Closed (N.C.) contact.
JP4	1–2	Relay2 Normally Open (N.O.) contact.
	2–3	Relay2 Normally Closed (N.C.) contact.

AC Line Connections

Reduced Input Voltage Derating All power ratings stated in Section 6 are for the stated nominal AC input voltages (230, 460 or 575VAC). The power rating of the control must be reduced when operating at a reduced input voltage. The amount of reduction is the ratio of the voltage change.

Examples:

A 10hp, 230VAC control operating at 208VAC has a reduced power rating of 9.04hp.

$$10HP \times \frac{208VAC}{230VAC} = 9.04hp$$

Likewise, a 10hp, 460VAC control operating at 380VAC has a reduced power rating of 8.26hp.

$$10HP \times \frac{380VAC}{460VAC} = 8.26hp$$

To obtain the full output rating of 10hp in either case requires a 15hp Control.

380-400VAC Operation Be sure all power to the control is disconnected before proceeding.
Size A, B2 and C2 controls may be used directly with a 380-400VAC power source, control modification is not necessary.

Size D, E, F and G controls all require modification for operation on the reduced line voltage.

Tap change procedure (size D, E and F controls)

1. Be sure drive operation is terminated and secured.
2. Remove all power sources from the control. If power has been applied, wait at least 5 minutes for bus capacitors to discharge.
3. Remove or open the front cover and locate the control transformer (Figure 3-3).
4. Remove the wire from terminal 5.
5. Place the wire that was removed from terminal 5 onto terminal 4.
6. Install or close the front cover.

Figure 3-3 Control Transformer Identification

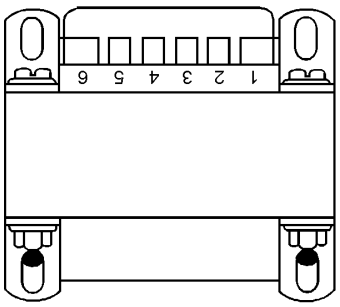

Control Transformer Tap Change Procedure (size G controls).

1. Be sure drive operation is terminated and control is disabled.
2. Remove all power sources from the control. If power has been applied, wait at least 5 minutes for bus capacitors to discharge.
3. Remove or open the front cover and locate the control transformer (Figure 3-4).
4. Remove the wires from the two right side terminals.
5. Place the wires on the center terminals as shown.
6. Install or close the front cover.

Figure 3-4 Configuring the Control Transformer Terminal Block for 380 - 400VAC (Size G)

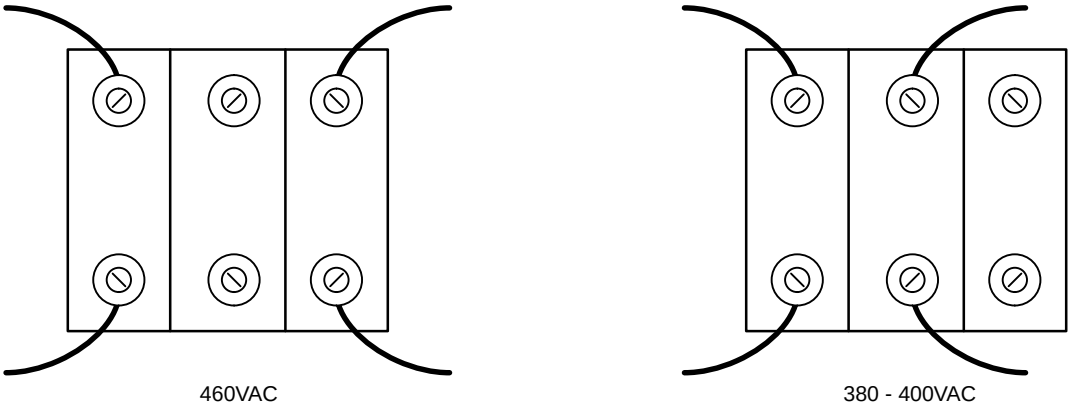

3 Phase Installation

The AC power and motor connections are shown in Figure 3-5.

Figure 3-5 3 Phase AC Power Connections

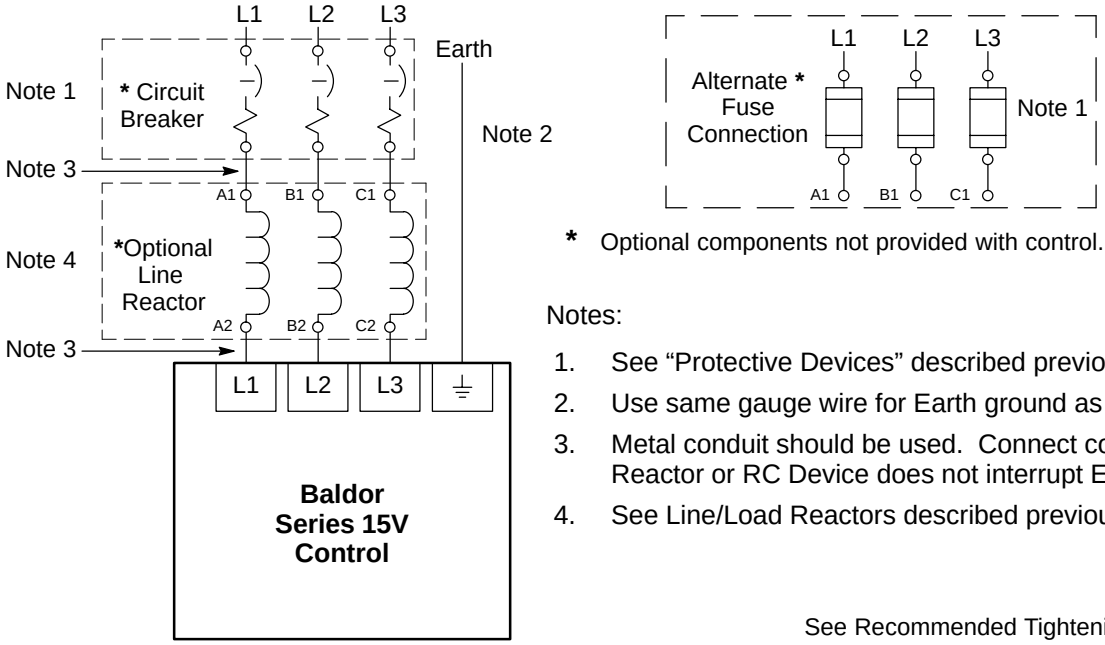

* Optional components not provided with control.

Notes:

1. See “Protective Devices” described previously in this section.
2. Use same gauge wire for Earth ground as is used for L1, L2 and L3.
3. Metal conduit should be used. Connect conduits so the use of a Reactor or RC Device does not interrupt EMI/RFI shielding.
4. See Line/Load Reactors described previously in this section.

See Recommended Tightening Torques in Section 6.

Table 3-6 and 3-7 list the wire size for the input AC power wires. Motor leads should be sized from the 3 phase tables.

Table 3-6 Single Phase Rating Wire Size and Protection Devices - 230 VAC Controls*

Control Rating		Input Breaker (Amps)	Input Fuse (Amps)		Wire Gauge	
Amps	HP		Fast Acting	Time Delay	AWG	mm^2
6.9	0.75	10	10	9	14	2.5
8.0	1	10	12	10	14	2.5
12	2	15	20	17.5	14	2.5
17	3	25	25	25	12	3.31
28	5	40	45	35	10	5.26
40	7.5	50	60	50	8	8.37
50	10	70	80	70	6	13.3
68	15	90	110	90	4	21.2
88	20	110	150	125	3	26.7
110	25	150	175	150	2	33.6
136	30	175	200	175	1/0	53.5
176	40	225	250	250	3/0	85.0
216	50	275	350	300	(2) 1/0	(2) 53.5

Table 3-7 Single Phase Rating Wire Size and Protection Devices - 460 VAC Controls*

Control Rating		Input Breaker (Amps)	Input Fuse (Amps)		Wire Gauge	
Amps	HP		Fast Acting	Time Delay	AWG	mm^2
3.5	0.75	5	5	5	14	2.5
4.0	1	5	6	5.6	14	2.5
6.0	2	7.5	10	8	14	2.5
8.5	3	12.5	15	12	14	2.5
14	5	17.5	20	20	12	3.31
20	7.5	25	30	25	10	5.26
25	10	40	40	30	10	5.26
34	15	45	50	45	8	8.37
44	20	60	70	60	8	8.37
55	25	70	80	70	6	13.3
68	30	90	100	90	4	21.2
88	40	110	150	125	3	26.7
108	50	150	175	150	2	33.6

*Note: All wire sizes are based on 75°C copper wire. Higher temperature smaller gauge wire may be used per NEC and local codes. Recommended fuses/breakers are based on 40°C ambient, maximum continuous control output current and no harmonic current.

Single Phase Input Power Considerations Single phase operation of G and H size controls is not possible.

Single phase AC input power can be used to power the control instead of three phase for control sizes A, B2, C2, D, E and F. The specifications and control sizes are listed in Section 6 of this manual. If single phase power is to be used, the rated Horsepower of the control may have to be reduced (derated). In addition, power wiring and jumper changes are required.

Single phase rating wire size and protection devices are listed in Tables NO TAG and NO TAG.

Single Phase Control Derating: Single phase power derating requires that the continuous and peak current ratings of the control be reduced by the following percentages:

1. **1-2 hp 230 and 460VAC controls:**
   No derating required.
2. **3-25 hp (Size B2 and C2) 230 and 460VAC controls:**
   Derate hp by 40% of the nameplate rating.
3. **15 hp (Size D) and Larger 230 and 460VAC controls:**
   Derate hp by 50% of the nameplate rating.

Size A and B2 Single Phase Power Installation (See Figure 3-6).

Jumper Configuration

Size A controls, no jumper changes required.

Figure 3-6 Size A & B2 Single Phase 230/460VAC Power and Motor Connections

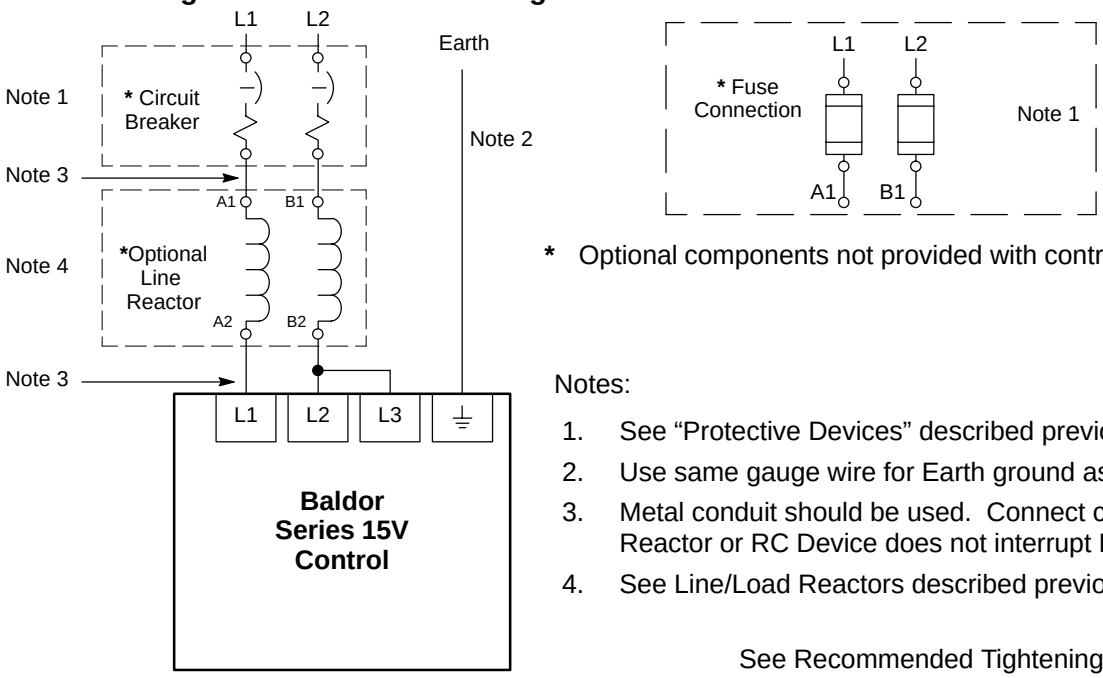

* Optional components not provided with control.

Notes:

1. See “Protective Devices” described previously in this section.
2. Use same gauge wire for Earth ground as is used for L1, L2 and L3.
3. Metal conduit should be used. Connect conduits so the use of a Reactor or RC Device does not interrupt EMI/RFI shielding.
4. See Line/Load Reactors described previously in this section.

See Recommended Tightening Torques in Section 6.

Size C2 Single Phase Power Installation

Jumper Configuration

Locate the Interface board, and place JP7 on pins 2 & 3 for single phase operation.

Figure 3-7 Jumper Configuration

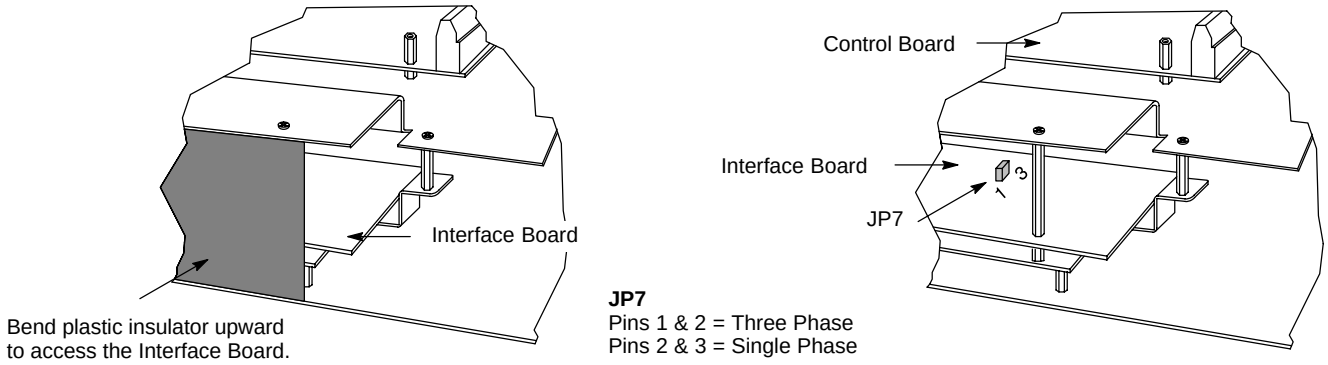

Figure 3-8 Size C2 Single Phase 230/460VAC Power and Motor Connections

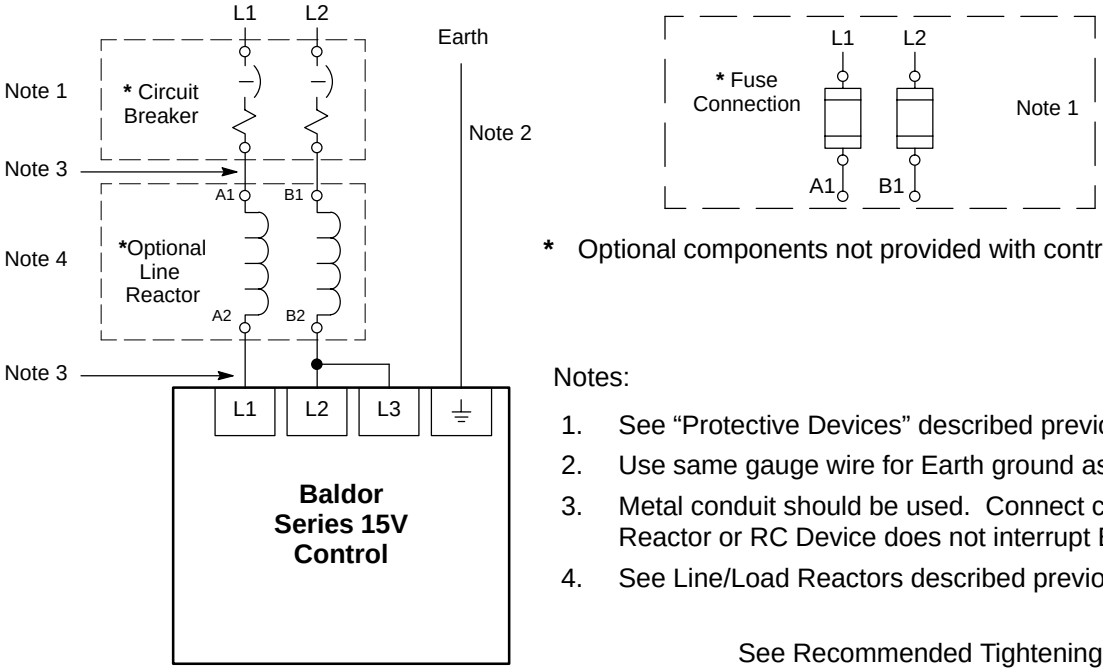

* Optional components not provided with control.

Notes:

1. See “Protective Devices” described previously in this section.
2. Use same gauge wire for Earth ground as is used for L1, L2 and L3.
3. Metal conduit should be used. Connect conduits so the use of a Reactor or RC Device does not interrupt EMI/RFI shielding.
4. See Line/Load Reactors described previously in this section.

See Recommended Tightening Torques in Section 6.

Size D Single Phase Power Installation

Jumper Configuration

Place JP2 on pins 1 & 2 for control single phase operation.
Place JP3 in position B for single phase operation of cooling fan.

Figure 3-9 Jumper Configuration

Place JP2 on pins 1 & 2 for control single phase operation.
Place JP3 in position B for fan single phase operation.

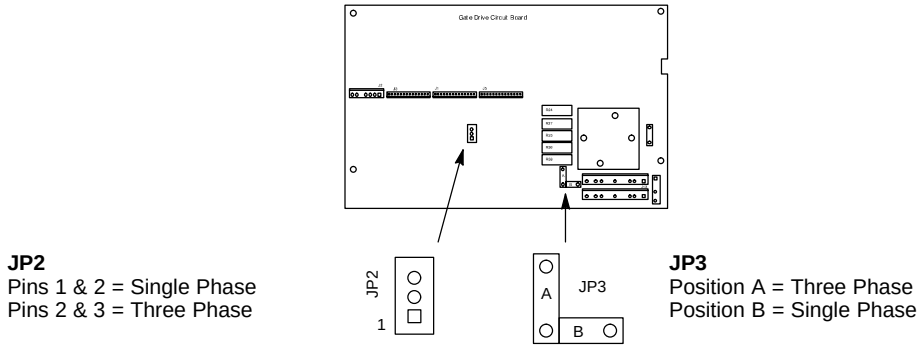

Figure 3-10 Size D Single Phase 230/460VAC Power Connections

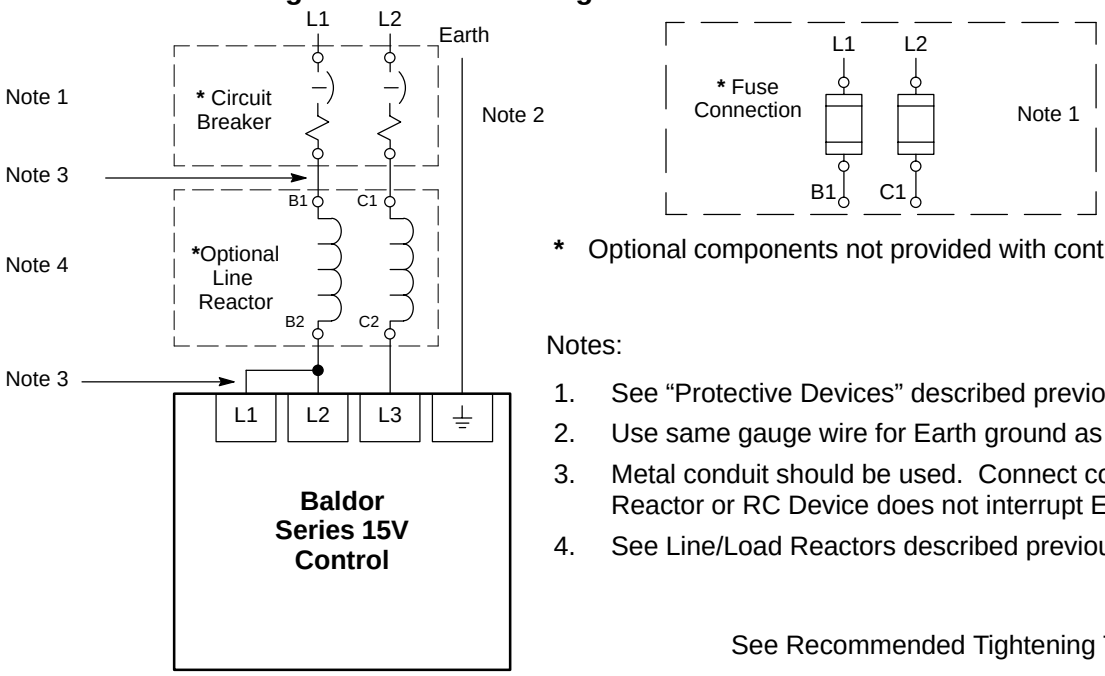

* Optional components not provided with control.

Notes:

1. See “Protective Devices” described previously in this section.
2. Use same gauge wire for Earth ground as is used for L1, L2 and L3.
3. Metal conduit should be used. Connect conduits so the use of a Reactor or RC Device does not interrupt EMI/RFI shielding.
4. See Line/Load Reactors described previously in this section.

See Recommended Tightening Torques in Section 6.

Size E Single Phase Power Installation

Figure 3-11 Jumper Configuration

Place JP1 on the High Voltage Circuit Board across pins 1 and 2.

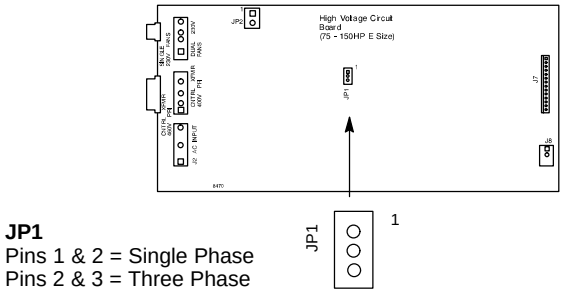

JP1
Pins 1 & 2 = Single Phase
Pins 2 & 3 = Three Phase

Figure 3-12 Size E Single Phase 230/460VAC Power Connections

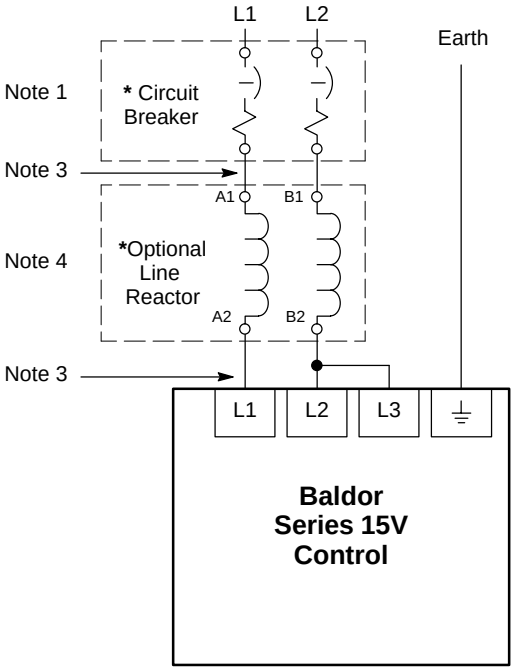

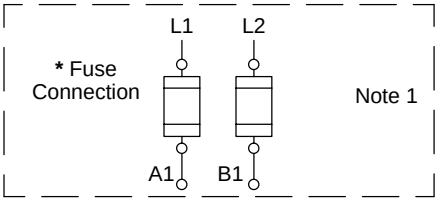

* Optional components not provided with control.

Notes:

1. See “Protective Devices” described previously in this section.
2. Use same gauge wire for Earth ground as is used for L1, L2 and L3.
3. Metal conduit should be used. Connect conduits so the use of a Reactor or RC Device does not interrupt EMI/RFI shielding.
4. See Line/Load Reactors described previously in this section.

See Recommended Tightening Torques in Section 6.

Size F Single Phase Power Installation

Figure 3-13 Jumper Configuration

Place JP2 on the High Voltage Circuit Board across pins 1 and 2.

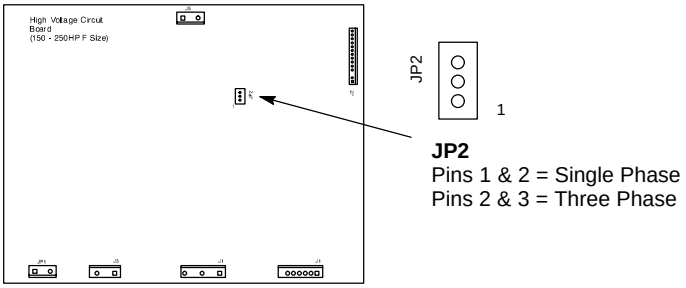

Figure 3-14 Size F Single Phase 230/460VAC Power Connections

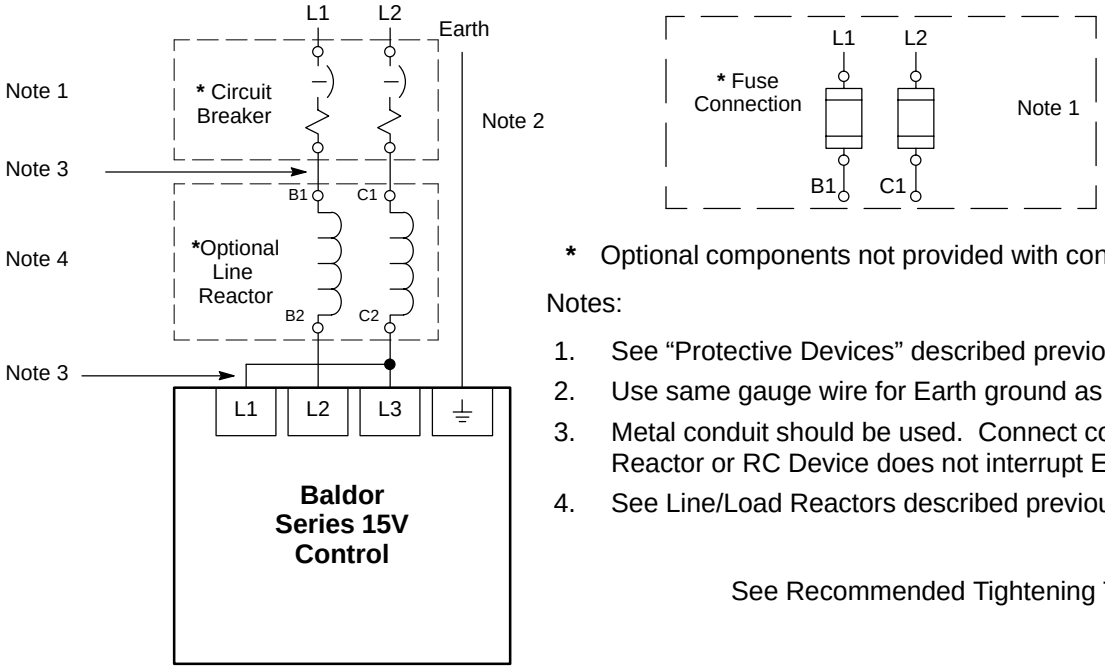

* Optional components not provided with control.

Notes:

1. See “Protective Devices” described previously in this section.
2. Use same gauge wire for Earth ground as is used for L1, L2 and L3.
3. Metal conduit should be used. Connect conduits so the use of a Reactor or RC Device does not interrupt EMI/RFI shielding.
4. See Line/Load Reactors described previously in this section.

See Recommended Tightening Torques in Section 6.

Motor Brake Connections

For motors with spring set brakes, connect the brake power leads and the motor power leads separately. Because the inverter has variable voltage output to the motor, the inverter may not supply enough power at low frequencies for proper brake operation. If using a motor with an internally connected brake, the brake power leads must be connected to a separate power source for proper brake operation.

Motor Connections

Motor connections are shown in Figure 3-15.

Figure 3-15 Motor Connections

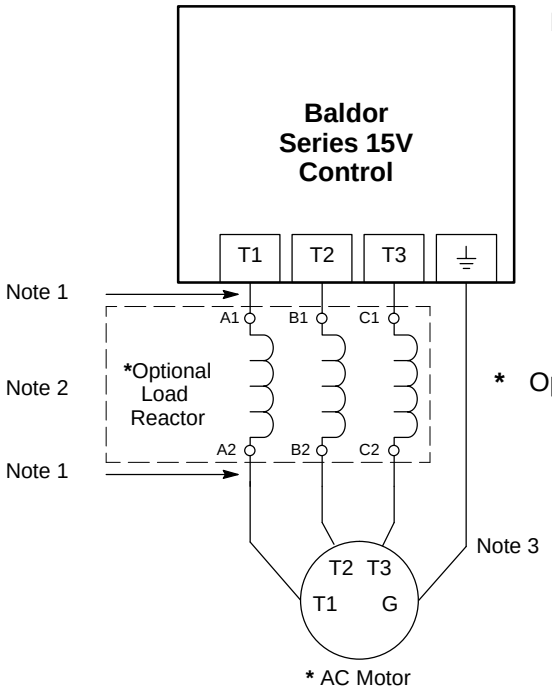

Notes:

1. Metal conduit should be used. Connect conduits so the use of Load Reactor or RC Device does not interrupt EMI/RFI shielding.
2. See Line/Load Reactors described previously in this section.
3. Use same gauge wire for Earth ground as for L1, L2 and L3.

* Optional components not provided with control.

See Recommended Tightening Torques in Section 6.

M-Contactor

If required by local codes or for safety reasons, an M-Contactor (motor circuit contactor) may be installed. However, incorrect installation or failure of the M-contactor or wiring may damage the control. If an M-Contactor is installed, the control must be disabled for at least 20msec before the M-Contactor is opened or the control may be damaged. M-Contactor connections are shown in Figure 3-16.

Figure 3-16 M-Contactor Diagram

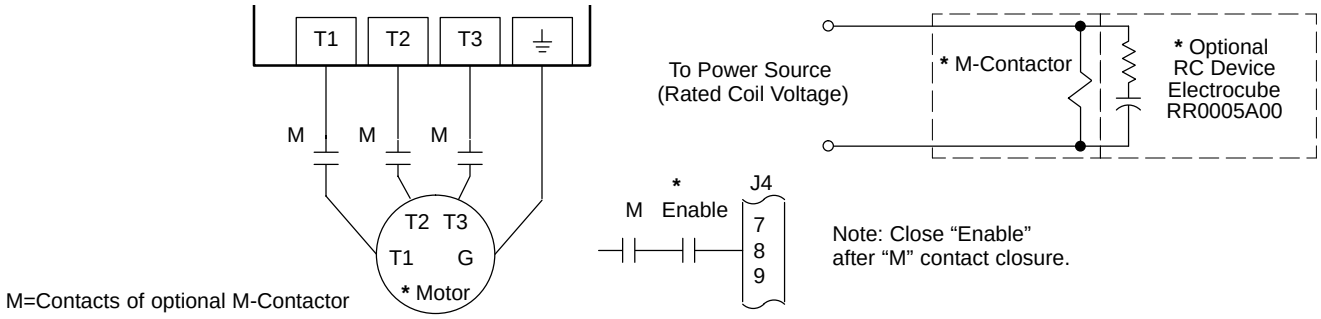

See Recommended Tightening Torques in Section 6.

Optional Dynamic Brake Hardware

Dynamic Brake (DB) Hardware must be installed on a flat, non-flammable, vertical surface for effective cooling and operation. For A and B2 size controls, refer to MN782 (RUA assemblies) for additional information. For C2 and larger controls, refer to MN701 (for RGA, RBA and RTA assemblies).

Electrical Installation

Terminal connections for DB hardware is determined by the Control model number suffix (E, EO, ER or MO). See Figure 3-17 for terminal identification. Refer to Tables and for wire information.

Figure 3-17 DB Terminal Identification

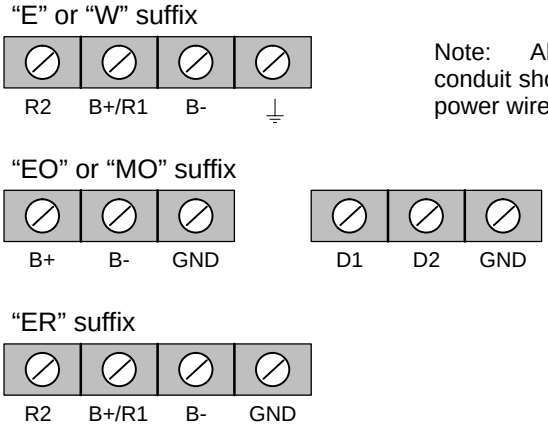

Note: Although not shown, metal conduit should be used to shield all power wires and motor leads.

Figure 3-18 Wiring for RGA Assembly

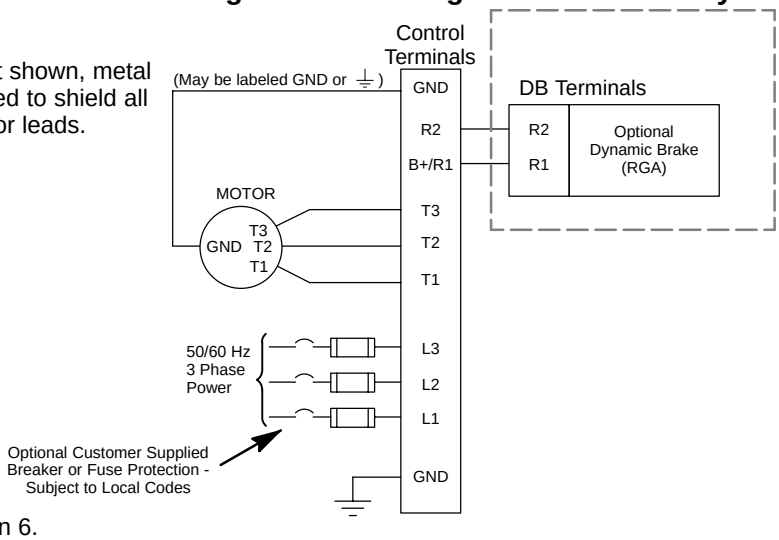

See recommended Terminal Tightening Torques in Section 6.

Figure 3-19 Wiring for RBA Assembly

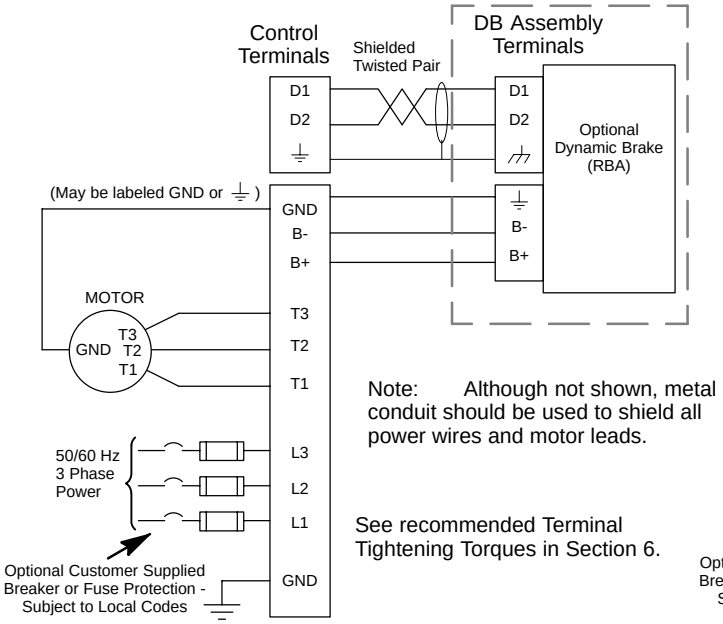

Note: Although not shown, metal conduit should be used to shield all power wires and motor leads.

See recommended Terminal Tightening Torques in Section 6.

Figure 3-20 Wiring for RTA Assembly

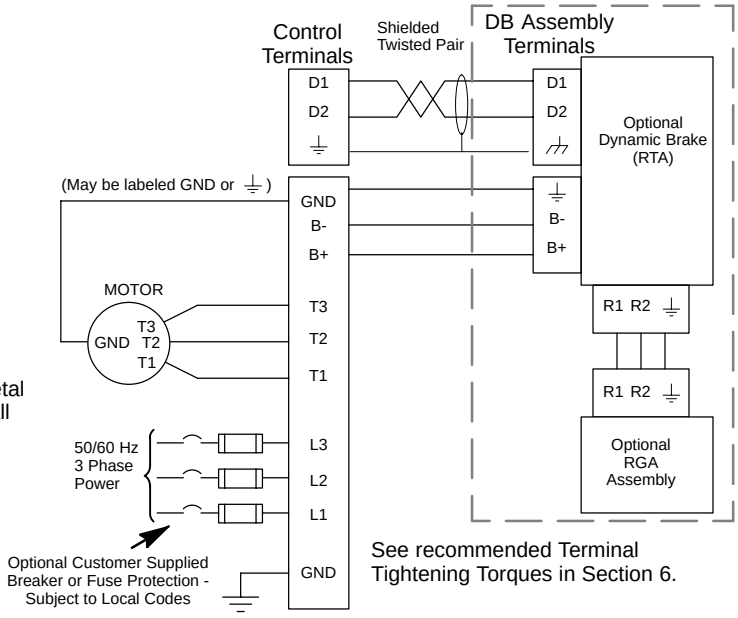

See recommended Terminal Tightening Torques in Section 6.

Figure 3-21 Wiring for RUA Assembly

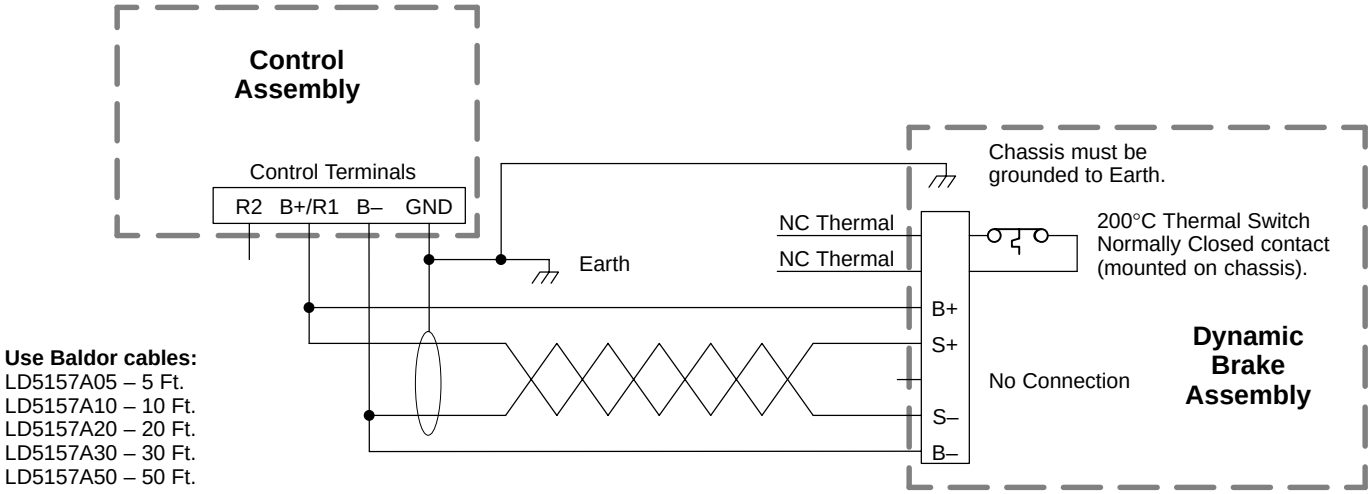

Note: Sense lines S+ and S– must be shielded, twisted pair wire.
Terminate shields at control end only.

See recommended Terminal Tightening Torques in Section 6.

Note: Baldor controls with an “E” or “W” suffix have an internal dynamic braking transistor and resistor installed. If you are installing a larger DB resistor , be sure to disconnect the internal resistor wires from terminals B+/R1and R2. These factory installed wires must be removed and the ends insulated with electrical tape to prevent contact with other components. Failure to disconnect the internal resistor may result in equipment damage.

Table 3-8 Terminal Torques & Wire Size for RUA Assemblies

Control Rating VAC	Braking Option Watts Max.	B+ and B– Terminals					S+ and S– Terminals				
		Shielded Wire Size		AC Volt	Tightening Torque		Shielded Wire Size		AC Volt	Tightening Torque	
		AWG	mm²		Lb–in	Nm	AWG	mm²		Lb–in	Nm
230	746	16	1.31	300	9	1	20	0.51	300	9	1
230	1492	16	1.31	300	9	1	20	0.51	300	9	1
230	1865	16	1.31	300	9	1	20	0.51	300	9	1
230	2238	14	2.08	300	9	1	20	0.51	300	9	1
230	3730	14	2.08	300	9	1	20	0.51	300	9	1
230	5600	14	2.08	300	9	1	20	0.51	300	9	1
460	746	16	1.31	600	9	1	20	0.51	600	9	1
460	1492	16	1.31	600	9	1	20	0.51	600	9	1
460	1865	16	1.31	600	9	1	20	0.51	600	9	1
460	2238	16	1.31	600	9	1	20	0.51	600	9	1
460	3730	14	2.08	600	9	1	20	0.51	600	9	1
460	5600	14	2.08	600	9	1	20	0.51	600	9	1
575	746	16	1.31	600	9	1	20	0.51	600	9	1
575	1492	16	1.31	600	9	1	20	0.51	600	9	1
575	1865	16	1.31	600	9	1	20	0.51	600	9	1
575	2238	16	1.31	600	9	1	20	0.51	600	9	1
575	3730	16	1.31	600	9	1	20	0.51	600	9	1
575	5600	16	1.31	600	9	1	20	0.51	600	9	1

Table 3-9 Dynamic Brake Wire Size for RGA, RBA and RTA Assemblies

Control Voltage Rating VAC	Braking Option Watts Rating	B+ / B- and R1 / R2 / ⏚ Terminals			D1 / D2 / ⏚ Terminals		
		Wire Size			Wire Size		
		AWG	mm^2	Volt	AWG	mm^2	Volt
230	<2,000	16	1.31	600	20-22	0.5	600
230	2,100 – 5,000	14	2.08	600	20-22	0.5	600
230	5,100 – 10,000	10	6	600	20-22	0.5	600
230	>10,000	8	10	600	20-22	0.5	600
460	<4,000	16	1.31	600	20-22	0.5	600
460	4,100 – 10,000	14	2.08	600	20-22	0.5	600
460	10,100 – 20,000	10	6	600	20-22	0.5	600
460	>20,000	8	10	600	20-22	0.5	600
575	<4,000	16	1.31	600	20-22	0.5	600
575	4,100 – 10,000	14	2.08	600	20-22	0.5	600
575	10,100 – 20,000	10	6	600	20-22	0.5	600
575	>20,000	8	10	600	20-22	0.5	600

Selection of Operating Mode (and Connection Diagram)

Several operating modes are available in the Series 15V Inverter control. These operating modes define the basic motor control setup and the operation of the input and output terminals. These operating modes are selected by programming the Operating Mode parameter in the Input programming Block. Available operating modes include:

- Keypad
- Standard Run, 3 Wire Control
- 15 Speed, 2 Wire Control
- Fan Pump 2 Wire Control Mode
- Fan Pump 3 Wire Control Mode
- Serial
- Process Control
- 3 Speed Analog 2 Wire
- 3 Speed Analog 3 Wire
- Electronic Potentiometer 2 Wire
- Electronic Potentiometer 3 Wire

Each mode requires connections to the J4 terminal strip (except the keypad mode, all connections are optional). The J4 terminal strip is shown in Figure 3-22. The connection of each input or output signal is described in the following pages.

Figure 3-22 Control Signal Connections

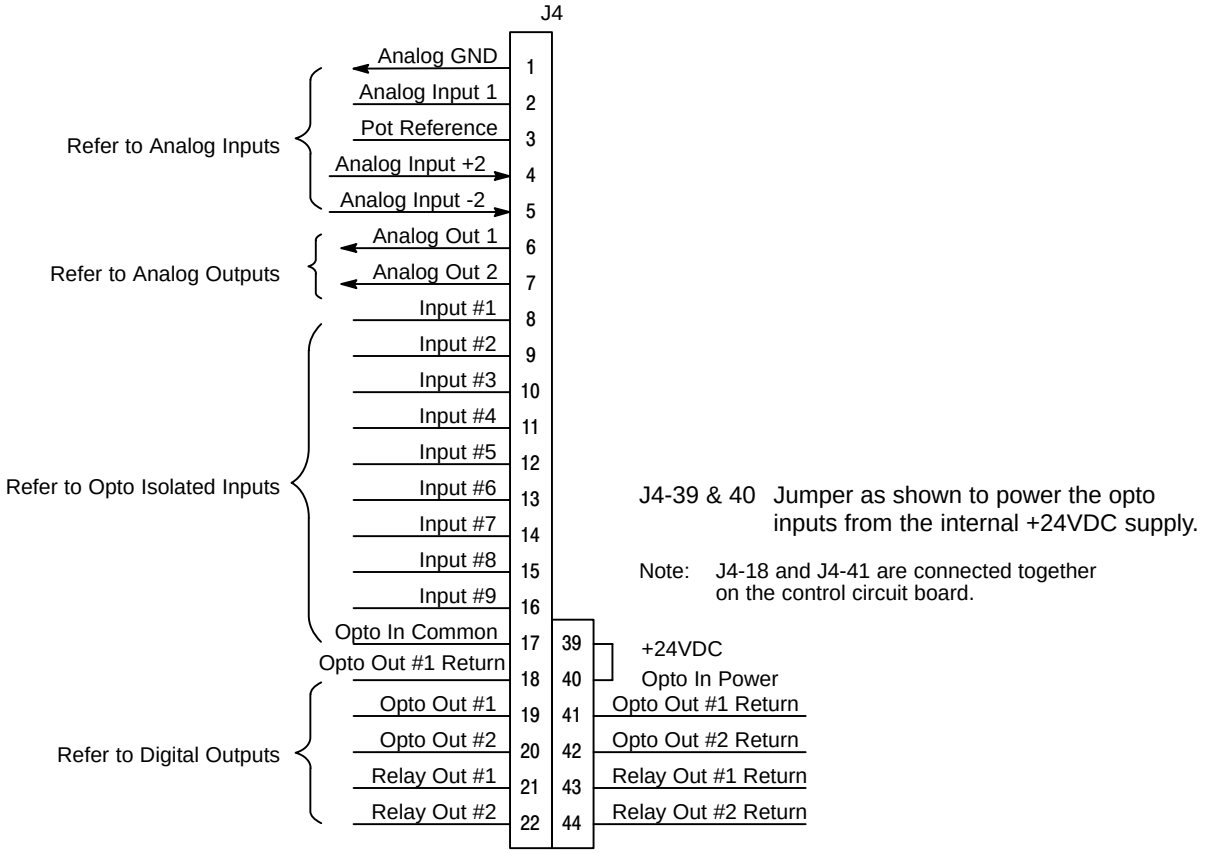

See recommended terminal tightening torques in Section 6.

Analog Inputs and Outputs

Two analog inputs are available: analog input #1 (J4-1 and J4-2) and analog input #2 (J4-4 and J4-5) as shown in Figure 3-23. Either analog input #1 or #2 may be grounded provided the common mode range is not exceeded. Either analog input may be selected in the Level 1 INPUT block, Command Select parameter value. Analog input #1 is selected if parameter value “Potentiometer” is selected. Analog input #2 is selected if parameter value “ 0-10Volts, 0-5 Volts or 4-20mA” is selected.

Figure 3-23 Analog Inputs and Outputs

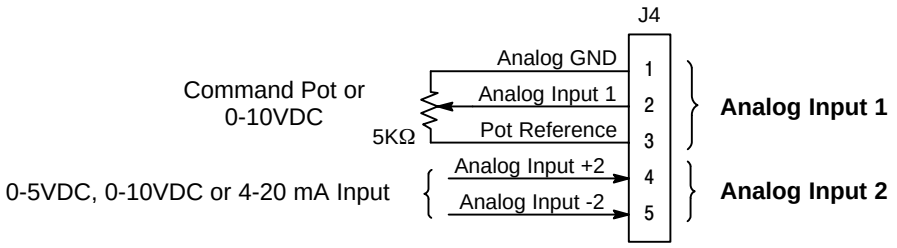

See recommended terminal tightening torques in Section 6.

Analog Input #1
(Single Ended)

The single ended analog input #1 is used when the controller is set to Standard 3 Wire, Fan Pump 2 Wire, Fan Pump 3 Wire, Serial, Process Control, 3 SPD ANA 2Wire, 3 SPD ANA 3Wire, EPOT-2 Wire or EPOT-3 Wire (not Keypad or 15 Speed).

The single ended analog input #1 can be used in one of three ways. Speed command (Level 1 Input block, Command Select=Potentiometer). Process Feedback (Level 2 Process Control block, Process Feedback=Potentiometer). Setpoint Source (Level 2 Process Control block, Setpoint Source=Potentiometer).

When using Analog Input #1, the respective parameter must be set to “POTENTIOMETER”.

Note: A potentiometer value of 5kΩ to 10kΩ, 0.5 watt may be used.

1. Connect the wires from the 5KΩ pot at the J4 terminal strip. One end of the pot is connected to J4-1 (analog ground) and the other end is connected to J4-3 (reference voltage).
2. Connect the wiper of the pot to J4-2. The voltage across terminals J4-1 and J4-2 is the speed command input.

Analog Input #2
(Differential)

Analog input #2 accepts a 0-5VDC, 0-10VDC or 4-20 mA command. The operating mode is defined in the Level 1 Input block OPERATING MODE parameter.

Note: Analog Input #2 is used with Standard Run 3-Wire, Fan Pump 2 Wire, Fan Pump 3 Wire, Process Control, 3 SPD ANA 2Wire, 3 SPD ANA 3Wire, EPOT-2 Wire or EPOT-3 Wire (not Keypad, 15 Speed or Serial modes).

Note: Analog Input #2 can be connected for single ended operation by grounding either of the inputs, provided the common mode voltage range is not exceeded. The common mode voltage can be measured with a voltmeter. Apply the maximum command voltage to analog input 2 (J4-4, 5). Measure the AC and DC voltage across J4-1 to J4-4. Add the AC and DC readings together. Measure the AC and DC voltage from J4-1 to J4-5. Add the AC and DC readings together.

If either of these measurement totals exceeds a total of ±15 volts, then the common mode voltage range has been exceeded. If the common mode voltage range has been exceeded, the solution is either to change the command voltage source or isolate the command voltage with a commercially available signal isolator.

Analog Outputs

Two programmable analog outputs are provided on J4-6 and J4-7. These outputs are scaled 0 - 5 VDC (1mA maximum output current) and can be used to provide real-time status of various control conditions. The return for these outputs is J4-1 analog ground.

Each output function is programmed in the Level 1 Output block, Analog Out #1 or #2 parameter values. The scaling of each output is programmable in the Level 1 Output block, Analog Scale #1 or #2.

Serial Operating Mode

The Serial operating mode requires one of the optional Serial Interface expansion boards (RS232, RS422 or RS485). Installation and operation information for these serial expansion boards is provided in Serial Communications expansion board manual MN1310. This manual is shipped with the serial expansion boards.

Keypad Operating Mode (see Figure 3-24)

The Keypad operating mode allows the control to be operated from the keypad. In this mode no control connection wiring is required. However, the Enable, Stop and External Trip inputs may optionally be used. All other opto inputs remain inactive. However, the analog outputs and opto-outputs remain active at all times.

For operation in Keypad mode, set the Level 1 Input block, Operating Mode parameter to Keypad.

To use the Enable input, J4-8 must be connected and the Local Enable INP parameter in the Level 2 Protection block must be set to ON. The Enable line is normally closed. When opened, the motor will COAST to a stop. When the enable line is again closed, the motor will not start until a new direction command is received from the keypad.

To use the Stop input, J4-11 must be connected and the Level 1 Keypad Setup block, LOC. Hot Start parameter must be set to ON. The Stop line is normally closed. When opened, the motor will COAST or REGEN to a stop depending upon the setting of Level 1 Keypad Setup block Keypad Stop Key parameter value. Closing the input will immediately start the motor.

The External Trip input is used to cause a fault condition during a motor over temperature condition. The External Trip input (J4-16) must be connected and the External Trip parameter in the Level 2 Protection block must be set to ON. When J4-16 is opened, the motor will coast to a stop and an External Trip fault will be displayed on the keypad.

Figure 3-24 Keypad Control Connection Diagram

J4-8 If J4-8 is connected, you must set Level 2 Protection block, Local Enable INP parameter to “ON” to activate the opto input.
CLOSED allows normal control operation.
OPEN disables the control and motor coasts to a stop.

J4-11 If J4-11 is connected, you must set Level 1 Keypad Setup block, Loc. Hot Start parameter to to “ON” to activate the opto input.
CLOSED allows normal control operation.
OPEN motor decels to stop (depending on Keypad Stop mode). The motor will restart when J4-11 closes after open if keypad FWD or REV key is active.

J4-16 If J4-16 is connected, you must set Level 2 Protection block, External Trip to “ON” to activate the opto input.
CLOSED allows normal control operation.
OPEN causes an external trip fault. The control will disable and the motor coasts to a stop. An external trip fault is displayed (also logged in the fault log).

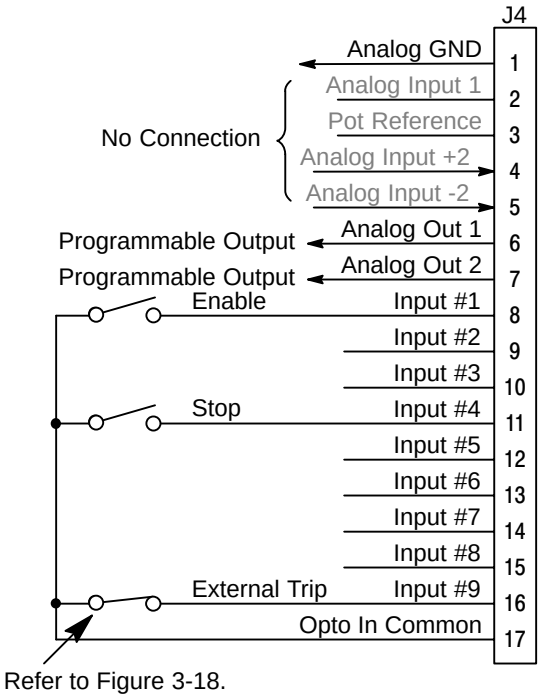

See recommended terminal tightening torques in Section 6.

Standard Run 3 Wire Operating Mode

In Standard Run mode, the control is operated by the opto isolated inputs at J4-8 through J4-16 and the analog command input. The opto inputs can be switches as shown in Figure 3-25 or logic signals from another device.

For 4-20mA input move jumper JP2 on the main control board to the bottom two pins (position 4-20mA shown in Figure 3-2). Analog Input 2 can then be used for 4-20mA operation.

Figure 3-25 Standard Run 3-Wire Connection Diagram

J4-8 CLOSED allows normal control operation.
OPEN disables the control and motor coasts to a stop.

J4-9 MOMENTARY CLOSED starts motor operation in the Forward direction. In JOG mode (J4-12 CLOSED), continuous CLOSED jogs motor in the Forward direction.

J4-10 MOMENTARY CLOSED starts motor operation in the Reverse direction. In JOG mode (J4-12 CLOSED), CONTINUOUS closed JOGS motor in the Reverse direction.

J4-11 MOMENTARY OPEN motor decels to stop (depending on Keypad Stop mode). Motor current continues to be applied to the motor.

J4-12 CLOSED places control in JOG mode, Forward and Reverse run are used to jog the motor.

J4-13 CLOSED selects ACC / DEC / S-CURVE group 2.
OPEN selects ACC / DEC / S-CURVE group 1.

J4-14 CLOSED selects preset speed #1, (J4-12, will override this preset speed).
OPEN allows speed command from Analog input #1 or #2.

J4-15 CLOSED to reset fault condition.
OPEN to run.

J4-16 If J4-16 is connected, you must set Level 2 Protection block, External Trip to “ON” to activate the opto input.
CLOSED allows normal control operation.
OPEN causes an external trip fault. The control will disable and the motor coasts to a stop. An external trip fault is displayed (also logged in the fault log).

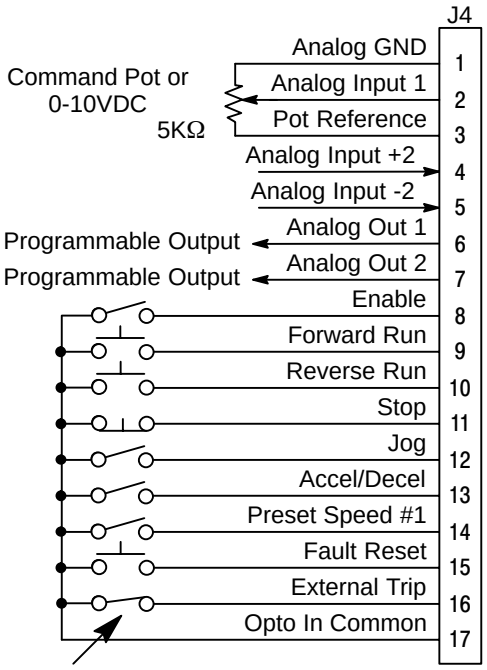

Refer to Figure 3-18.

See recommended terminal tightening torques in Section 6.

15 Speed 2-Wire Operating Mode

Operation in the 15 Speed 2-Wire mode is controlled by the opto isolated inputs at J4-8 through J4-16. The opto inputs can be switches as shown in Figure 3-26 or logic signals from another device.

Switched inputs at J4-11 through J4-14 allow selection of 15 preset speeds and provide Fault Reset as defined in Table 3-10.

Figure 3-26 15 Speed 2-Wire Control Connection Diagram

J4-8 CLOSED allows normal control operation.
OPEN disables the control and motor coasts to a stop.

J4-9 CLOSED operates the motor in the Forward direction (with J4-10 open).
OPEN motor decels to stop depending on Keypad Stop mode.

J4-10 CLOSED operates motor in the Reverse direction (with J4-9 open).
OPEN motor decels to stop depending on Keypad Stop mode.

J4-11-14 Selects programmed preset speeds as defined in Table 3-10.

J4-15 CLOSED selects ACC / DEC / S-CURVE group 2.
OPEN selects ACC / DEC / S-CURVE group 1.

J4-16 If J4-16 is connected, you must set Level 2 Protection block, External Trip to "ON" to activate the opto input.
CLOSED allows normal control operation.
OPEN causes an external trip fault. The control will disable and the motor coasts to a stop. An external trip fault is displayed (also logged in the fault log).

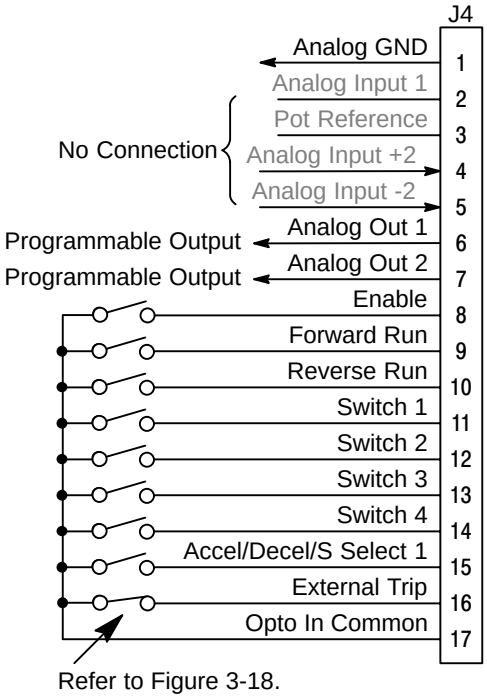

See recommended terminal tightening torques in Section 6.

Table 3-10 Switch Truth Table for 15 Speed, 2 Wire Control Mode

Function	J4-11	J4-12	J4-13	J4-14
Preset 1	Open	Open	Open	Open
Preset 2	Closed	Open	Open	Open
Preset 3	Open	Closed	Open	Open
Preset 4	Closed	Closed	Open	Open
Preset 5	Open	Open	Closed	Open
Preset 6	Closed	Open	Closed	Open
Preset 7	Open	Closed	Closed	Open
Preset 8	Closed	Closed	Closed	Open
Preset 9	Open	Open	Open	Closed
Preset 10	Closed	Open	Open	Closed
Preset 11	Open	Closed	Open	Closed
Preset 12	Closed	Closed	Open	Closed
Preset 13	Open	Open	Closed	Closed
Preset 14	Closed	Open	Closed	Closed
Preset 15	Open	Closed	Closed	Closed
Fault Reset	Closed	Closed	Closed	Closed

Fan Pump 2 Wire Operating Mode

Operation in the Fan Pump 2-Wire mode is controlled by the opto isolated inputs at J4-8 through J4-16. The opto inputs can be switches as shown in Figure 3-27 or logic signals from another device.

Switched inputs at J4-11 through J4-14 allow selection of 15 preset speeds and provide Fault Reset as defined in the Speed Select Table.

Figure 3-27 Fan Pump, 2 Wire Control Connection Diagram

J4-8 CLOSED allows normal control operation.
OPEN disables the control and the motor coasts to a stop.

J4-9 CLOSED operates the motor in the Forward direction (with J4-10 open).
OPEN motor decels to stop (depending on Keypad Stop mode).

Note: J4-9 and J4-10 are both closed = Fault Reset.

J4-10 CLOSED operates the motor in the Reverse direction (with J4-9 open).
OPEN motor decels to stop (depending on Keypad Stop mode).

Note: J4-9 and J4-10 are both closed = Fault Reset.

J4-11 CLOSED selects Analog Input #1 (if J4-13, J4-14 and J4-15 are closed).
OPEN selects command select (Level 1, Input, Command Select, if J4-13, J4-14 and J4-15 are closed).

J4-12 CLOSED selects STOP/START and Reset commands from terminal strip.
OPEN selects STOP/START and Reset commands from Keypad.

J4-13 CLOSED allows other selections, see Speed Select Table 3-11.
OPEN selects speed commanded from Keypad (if J4-14 and J4-15 are closed).

Note: When changing from Terminal Strip to Keypad (J4-12 or J4-13) the motor speed and direction will remain the same after the change.

J4-14 Firestat. Selects Level 1, Preset Speeds, Preset Speed #1.

J4-15 Freezestat. Level 1, Preset Speeds, Preset Speed #2 (if J4-14 is closed).

J4-16 If J4-16 is connected, you must set Level 2 Protection block, External Trip to “ON” to activate the opto input.
CLOSED allows normal control operation.
OPEN causes an external trip fault. The control will disable and the motor coasts to a stop. An external trip fault is displayed (also logged in the fault log).

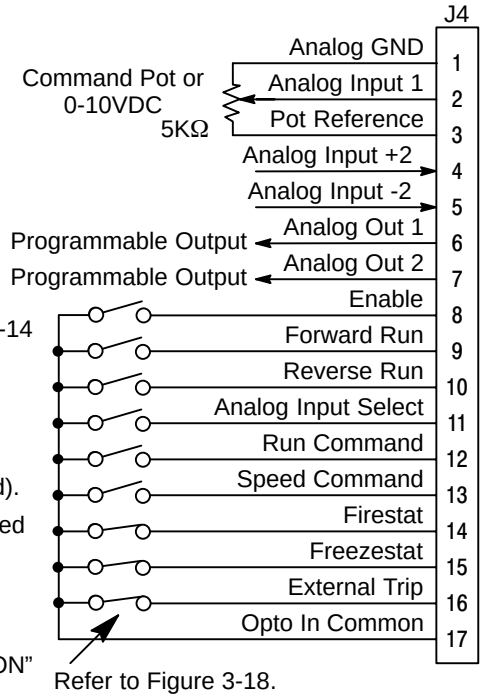

See recommended terminal tightening torques in Section 6.

Table 3-11 Speed Select Table – Fan Pump, 2 Wire

J4-11	J4-13	J4-14	J4-15	Command
	Open	Closed	Closed	Keypad Speed Command
		Open		Level 1, Preset Speeds, Preset Speed #1
		Closed	Open	Level 1, Preset Speeds, Preset Speed #2
Open	Closed	Closed	Closed	Analog Input (Level 1, Input, Command Select)
Closed	Closed	Closed	Closed	Analog Input #1

Fan Pump 3 Wire Operating Mode

Operation in the Fan Pump 3-Wire mode is controlled by the opto isolated inputs at J4-8 through J4-16. The opto inputs can be switches as shown in Figure 3-28 or logic signals from another device.

Switched inputs at J4-11 through J4-14 allow selection of 15 preset speeds and provide Fault Reset as defined in the Speed Select Table.

Figure 3-28 Fan Pump, 3 Wire Control Connection Diagram

J4-8 CLOSED allows normal control operation.
OPEN disables the control and the motor coasts to a stop.

J4-9 MOMENTARY CLOSED starts motor operation in the Forward direction.

Note: Closing both J4-9 and J4-10 at the same time will reset a fault condition.

J4-10 MOMENTARY CLOSED starts motor operation in the Reverse direction.

Note: Closing both J4-9 and J4-10 at the same time will reset a fault condition.

J4-11 OPEN motor decels to stop (depending on Keypad Stop mode).

J4-12 CLOSED selects STOP/START and Reset commands from terminal strip.
OPEN selects STOP/START and Reset commands from Keypad.

J4-13 CLOSED allows other selections, see Speed Select Table 3-12.
OPEN selects speed commanded from Keypad (if J4-14 and J4-15 are closed).

J4-14 Firestat. Selects Level 1, Preset Speeds, Preset Speed #1.

J4-15 Freezestat. Selects Level 1, Preset Speeds, Preset Speed #2 (if J4-14 is closed).

J4-16 If J4-16 is connected, you must set Level 2 Protection block, External Trip to “ON” to activate the opto input.
CLOSED allows normal control operation.
OPEN causes an external trip fault. The control will disable and the motor coasts to a stop. An external trip fault is displayed (also logged in the fault log).

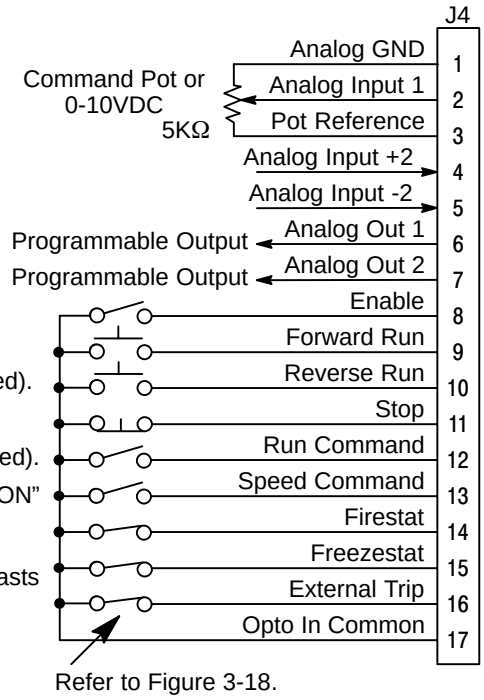

See recommended terminal tightening torques in Section 6.

Table 3-12 Speed Select Table – Fan Pump, 3 Wire

J4-13	J4-14	J4-15	Command
	Open		Level 1, Preset Speeds, Preset Speed #1
	Closed	Open	Level 1, Preset Speeds, Preset Speed #2
Open	Closed	Closed	Keypad Speed Command
Closed	Closed	Closed	Analog Input (Level 1, Input, Command Select)

3 Speed Analog 2 Wire Operating Mode

Allows selection of 3 preset speeds with 2 wire inputs. The opto inputs can be switches as shown in Figure 3-29 or logic signals from another device. Preset speeds are set in the Level 1 Preset Speeds block, Preset Speed #1, Preset Speed #2 and Preset Speed #3.

Figure 3-29 3 Speed Analog, 2 Wire Control Connection Diagram

J4-8 CLOSED allows normal control operation.
OPEN disables the control and the motor coasts to a stop.

J4-9 CLOSED operates the motor in the Forward direction (with J4-10 open).
OPEN motor decels to stop (depending on Keypad Stop mode).

J4-10 CLOSED operates the motor in the Reverse direction (with J4-9 open).
OPEN motor decels to stop (depending on Keypad Stop mode).

Note: Closing both J4-9 and J4-10 at the same time will reset a fault condition.

J4-11 CLOSED selects Analog Input #1.
OPEN selects Level 1 Input block, Command Select parameter.

J4-12 CLOSED selects STOP/START and Reset commands from terminal strip.
OPEN selects STOP/START and Reset commands from Keypad.

J4-13 CLOSED selects Level 1 Input block, Command Select parameter.
OPEN selects speed commanded from the keypad.

Note: When changing from Terminal Strip to Keypad (J4-12 or J4-13) the motor speed and direction will remain the same after the change.

J4-14 Selects speed command as defined in the Speed Select Table 3-13.

J4-15 Selects speed command as defined in the Speed Select Table 3-13.

J4-16 If J4-16 is connected, you must set Level 2 Protection block, External Trip to “ON” to activate the opto input.
CLOSED allows normal control operation.
OPEN causes an external trip fault. The control will disable and the motor coasts to a stop. An external trip fault is displayed (also logged in the fault log).

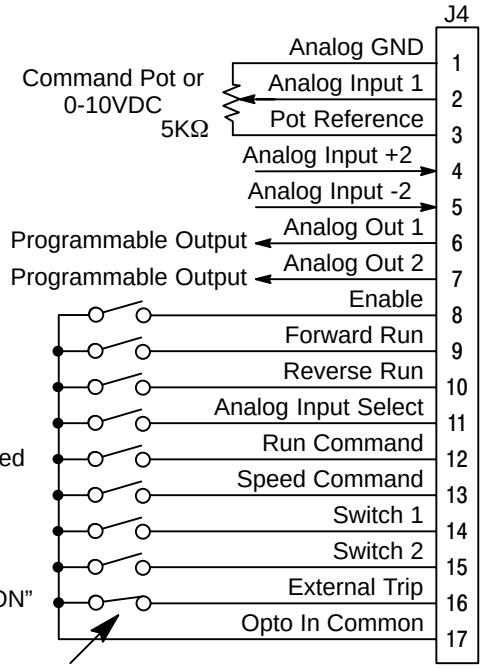

Refer to Figure 3-18.

See recommended terminal tightening torques in Section 6.

Table 3-13 Speed Select Table – 3 Speed Analog, 2 Wire

J4-14	J4-15	Command
Open	Open	Analog Input (Level 1, Input, Command Select)
Closed	Open	Level 1, Preset Speeds, Preset Speed #1
Open	Closed	Level 1, Preset Speeds, Preset Speed #2
Closed	Closed	Level 1, Preset Speeds, Preset Speed #3

3 Speed Analog 3 Wire Operating Mode

Allows selection of 3 preset speeds with 3 wire inputs. The opto inputs can be switches as shown in Figure 3-30 or logic signals from another device.

The values of the preset speeds are set in the Level 1 Preset Speeds block, Preset Speed #1, Preset Speed #2 and Preset Speed #3.

Figure 3-30 3 Speed Analog, 3 Wire Control Connection Diagram

J4-8 CLOSED allows normal control operation.
OPEN disables the control and the motor coasts to a stop.

J4-9 MOMENTARY CLOSED starts motor operation in the Forward direction.

J4-10 MOMENTARY CLOSED starts motor operation in the Reverse direction.

J4-11 When OPEN motor decels to stop (depending on Keypad Stop mode).

J4-12 CLOSED selects STOP/START and Reset commands from terminal strip.
OPEN selects STOP/START and Reset commands from Keypad.

J4-13 CLOSED allows various selections, see Speed Select Table 3-14.
OPEN selects speed commanded from Keypad.

Note: When changing from Terminal Strip to Keypad (J4-12 or J4-13) the motor speed and direction will remain the same after the change.

J4-14 Selects speed command as defined in the Speed Select Table 3-14.

J4-15 Selects speed command as defined in the Speed Select Table 3-14.

J4-16 If J4-16 is connected, you must set Level 2 Protection block, External Trip to “ON” to activate the opto input.
CLOSED allows normal control operation.
OPEN causes an external trip fault. The control will disable and the motor coasts to a stop. An external trip fault is displayed (also logged in the fault log).

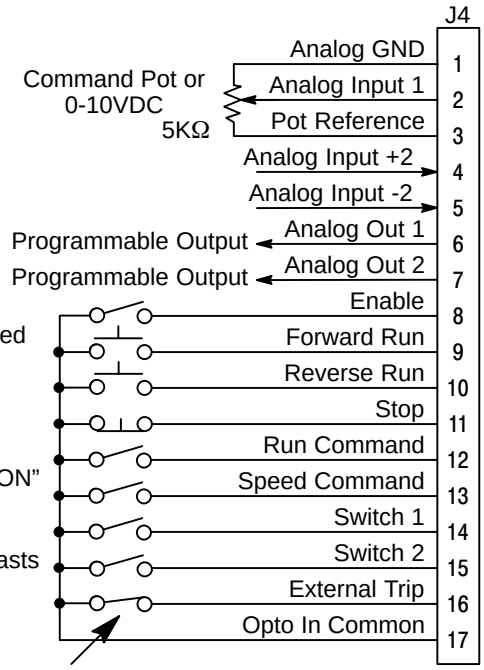

Refer to Figure 3-18.

See recommended terminal tightening torques in Section 6.

Table 3-14 Speed Select Table – 3 Speed Analog, 3 Wire

J4-14	J4-15	Command
Open	Open	Analog Input (Level 1, Input, Command Select)
Closed	Open	Level 1, Preset Speeds, Preset Speed #1
Open	Closed	Level 1, Preset Speeds, Preset Speed #2
Closed	Closed	Level 1, Preset Speeds, Preset Speed #3

Electronic Pot 2 Wire Operating Mode

Provides speed Increase and Decrease inputs to allow EPOT operation with 2 wire inputs. The opto inputs can be switches as shown in Figure 3-31 or logic signals from another device. The values of the preset speeds are set in the Level 1 Preset Speeds block, Preset Speed #1 or Preset Speed #2.

Figure 3-31 EPOT, 2 Wire Control Connection Diagram

J4-8 CLOSED allows normal control operation.
OPEN disables the control and motor coasts to a stop.

J4-9 CLOSED starts motor operation in the Forward direction.
OPEN motor decels to stop (depending on Keypad Stop mode).

J4-10 CLOSED starts motor operation in the Reverse direction.
OPEN motor decels to stop (depending on Keypad Stop mode).

Note: Closing both J4-9 and J4-10 at the same time will reset a fault condition.

J4-11 Selects speed command as defined in the Speed Select Table 3-15.

J4-12 Selects speed command as defined in the Speed Select Table 3-15.

J4-13 CLOSED selects ACC / DEC / S-CURVE group 2.
OPEN selects ACC / DEC / S-CURVE group 1.

J4-14 Momentary CLOSED increases motor speed while contact is closed.

J4-15 Momentary CLOSED decreases motor speed while contact is closed.

J4-16 If J4-16 is connected, you must set Level 2 Protection block, External Trip to "ON" to activate the opto input.
CLOSED allows normal control operation.
OPEN causes an external trip fault. The control will disable and the motor coasts to a stop. An external trip fault is displayed (also logged in the fault log).

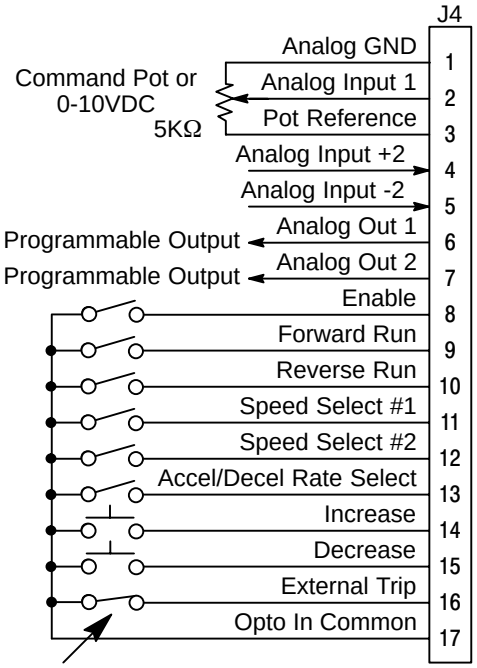

See recommended terminal tightening torques in Section 6.

Table 3-15 Speed Select Table

J4-11	J4-12	Command
Open	Open	Electronic Pot
Closed	Open	Analog Input (Level 1, Input, Command Select)
Open	Closed	Level 1, Preset Speeds, Preset Speed #1
Closed	Closed	Level 1, Preset Speeds, Preset Speed #2

Electronic Pot 3 Wire Operating Mode

Provides speed Increase and Decrease inputs to allow EPOT operation with 3 wire inputs. The opto inputs can be switches as shown in Figure 3-32 or logic signals from another device.

Figure 3-32 EPOT, 3 Wire Control Connection Diagram

J4-8 CLOSED allows normal control operation.
OPEN disables the control and motor coasts to a stop.

J4-9 Momentary CLOSED starts motor operation in the Forward direction.

J4-10 Momentary CLOSED starts motor operation in the Reverse direction.

Note: Closing both J4-9 and J4-10 at the same time will reset a fault condition.

J4-11 Momentary OPEN motor decels to stop (depending on Keypad Stop mode).

J4-12 CLOSED selects the Level 1, Input, Command Select parameter value.
OPEN selects EPOT.

J4-13 CLOSED selects ACC / DEC / S-CURVE group 2.
OPEN selects ACC / DEC / S-CURVE group 1.

J4-14 Momentary CLOSED increases motor speed while contact is closed.

J4-15 Momentary CLOSED decreases motor speed while contact is closed.

J4-16 If J4-16 is connected, you must set Level 2 Protection block, External Trip to "ON" to activate the opto input.
CLOSED allows normal control operation.
OPEN causes an external trip fault. The control will disable and the motor coasts to a stop. An external trip fault is displayed (also logged in the fault log).

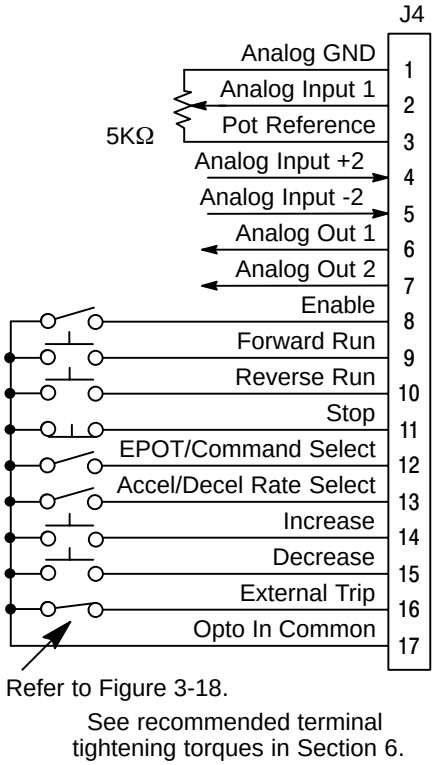

Process Operating Mode The process control mode provides an auxiliary closed loop general purpose PID set point control. The process control loop may be configured in various ways and detailed descriptions of the process mode are given in MN707 “Introduction to Process Control”. The opto inputs can be switches as shown in Figure 3-33 or logic signals from another device.

Figure 3-33 Process Mode Connection Diagram

J4-8 CLOSED allows normal control operation.
OPEN disables the control & motor coasts to a stop.

J4-9 CLOSED operates the motor in the Forward direction (with J4-10 open).
OPEN motor decels to stop (depending on Keypad Stop mode).

J4-10 CLOSED operates the motor in the Reverse direction (with J4-9 open).
OPEN motor decels to stop (depending on Keypad Stop mode).

J4-11 CLOSED, selects Accel/Decel group 2 parameters.
OPEN, selects Accel/Decel group 1 parameters.

J4-12 CLOSED causes the control to JOG in the reverse direction.

J4-13 CLOSED to enable the Process Mode.

J4-14 CLOSED causes the control to JOG in the forward direction.

J4-15 CLOSED to reset a fault condition.
OPEN to run.

J4-16 If J4-16 is connected, you must set Level 2 Protection block, External Trip to “ON” to activate the opto input.
CLOSED allows normal control operation.
OPEN causes an external trip fault. The control will disable and the motor coasts to a stop. An external trip fault is displayed (also logged in the fault log).

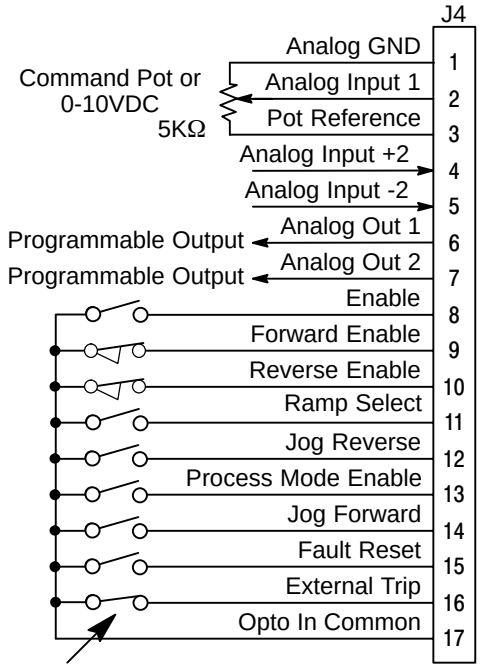

Refer to Figure 3-34.

See recommended terminal tightening torques in Section 6.

Table 3-16 Process Mode Input Signal Compatibility

Setpoint or Feedforward	Feedback						
	J4-1 & 2	J4-4 & 5	5V EXB [1]	10V EXB [1]	4-20mA EXB [1]	3-15 PSI EXB [2]	DC Tach EXB [3]
J4-1 & 2	■						
J4-4 & 5		■					
5V EXB [1]			■	■	■	▥	
10V EXB [1]			■	■	■	▥	
4-20mA EXB [1]			■	■	■	▥	
3-15 PSI EXB [2]			▥	▥	▥	■	
DC Tach EXB [3]						▥	■
EXB PULSE FOL [4] [5]						▥	
Serial [5] [6]			▥	▥	▥	▥	

[1] Requires expansion board EXB007A01 (High Resolution Analog I/O EXB).

[2] Requires expansion board EXB004A01 (4 Output Relays/3-15 PSI Pneumatic Interface EXB).

[3] Requires expansion board EXB006A01 (DC Tachometer Interface EXB).

[4] Requires expansion board EXB005A01 (Master Pulse Reference/Isolated Pulse Follower EXB).

[5] Used for Feedforward only. Must not be used for Setpoint Source or Feedback.

[6] Requires expansion board EXB001A01 (RS232 Serial Communication EXB). or
Requires expansion board EXB002A01 (RS422/RS485 High Speed Serial Communication EXB).

■ Conflicting inputs. Do not use same input signal multiple times.

▥ Conflicting level 1 or 2 expansion boards. Do not use!

External Trip Input

Terminal J4-16 is available for connection to a normally closed thermostat or overload relay in all operating modes as shown in Figure 3-34. The thermostat or overload relay should be a dry contact type with no power available from the contact. If the motor thermostat or overload relay activates, the control will automatically shut down and give an External Trip fault. The optional relay (CR1) shown provides the isolation required and the N.O. contact is open when power is applied to the relay and the motor is cold. If the motor thermostat is tripped, CR1 is de-energized and the N.O. contact closes.

Connect the External Trip Input wires (N.O. relay contact) to J4-16 and J4-17. Do not place these wires in the same conduit as the motor power leads.

To activate the External Trip input, the External Trip parameter in the Level 2 Protection Block must be set to “ON”.

Figure 3-34 Motor Temperature Relay

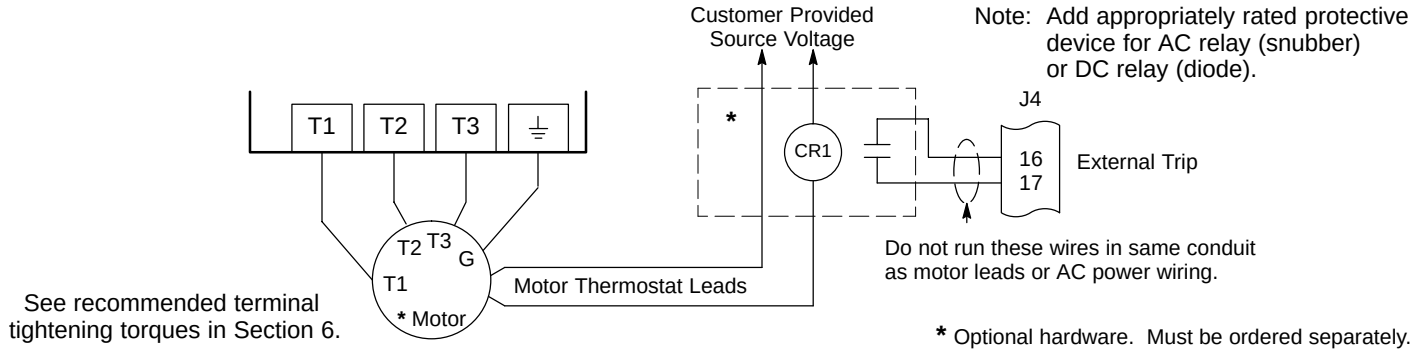

Opto-Isolated Inputs

The equivalent circuit of the nine opto inputs is shown in Figure 3-35. The function of each input depends on the operating mode selected and are described previously in this section. This Figure also shows the connections using the internal opto input Supply.

Figure 3-35 Opto-Input Connections (Using Internal Supply)

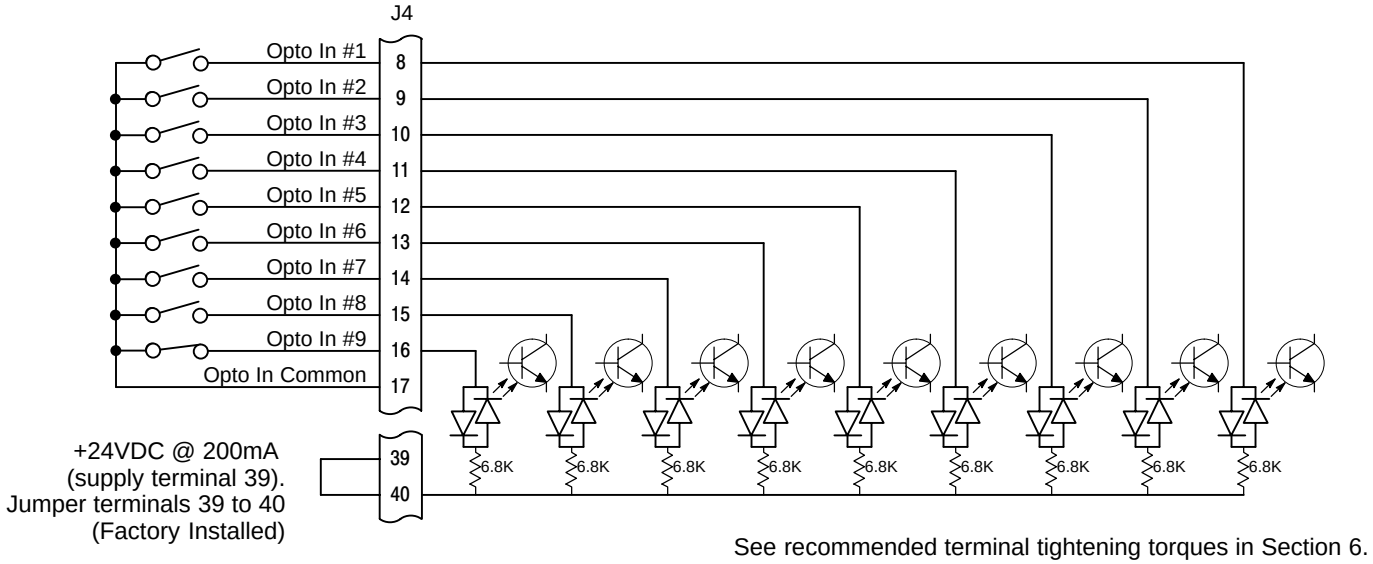

Figure 3-36 Opto-Input Connections (Using External Supply)

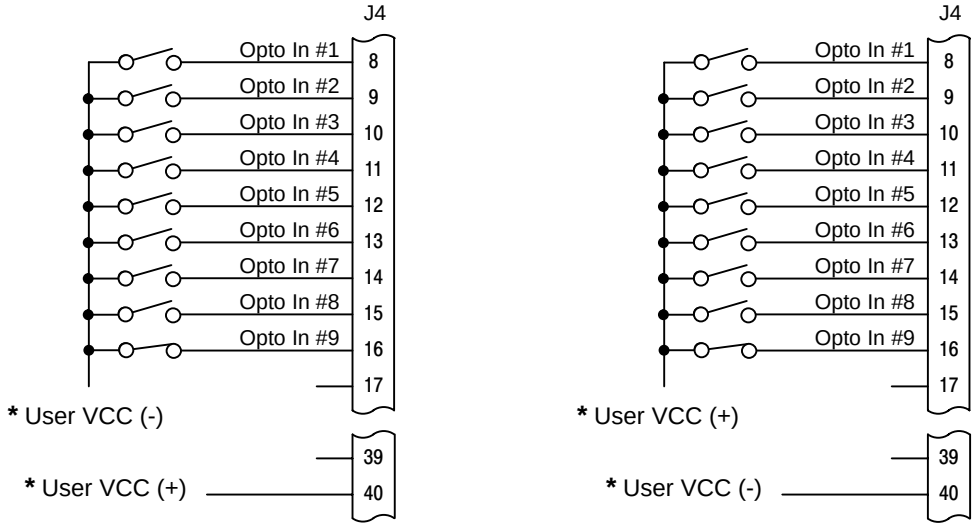

Opto Inputs Closing to Ground **Opto Inputs Closing to +VCC**

* User VCC = 10 - 30VDC External Power Source

See recommended terminal tightening torques in Section 6.

Digital Outputs

Two programmable opto isolated outputs (Digital Outputs 1 & 2) are available at terminals J4-19 through J4-22. See Figure 3-37. Each output may be programmed to represent one output condition. The output conditions are defined in Section 4 of this manual.

The opto isolated outputs may be configured for sinking or sourcing 60 mA each, as shown in Figure 3-37. However, both must be configured the same. The maximum voltage from opto output to common when active is 1.0 VDC (TTL compatible). The equivalent circuit for the opto isolated outputs is shown in Figure 3-38.

If the opto outputs are used to directly drive a relay, a flyback diode rated at 1A, 100 V (IN4002 or equivalent) minimum should be connected across the relay coil.

Each opto output is programmed in the Output programming block.

Figure 3-37 Opto-isolated Output Configurations

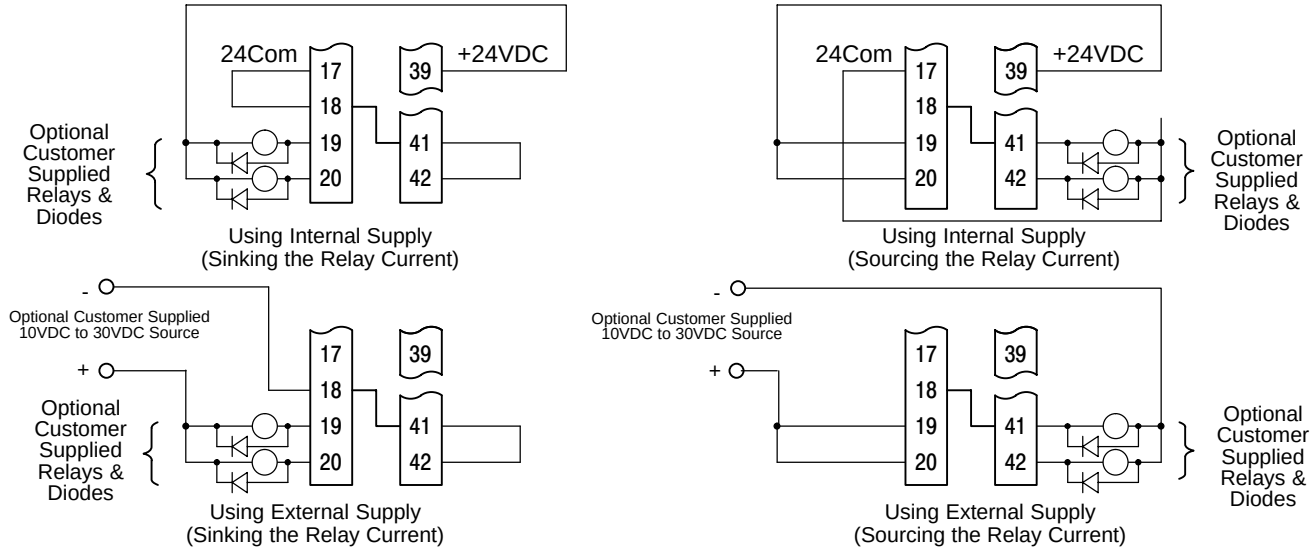

See recommended terminal tightening torques in Section 6.

Figure 3-38 Opto-Output Equivalent Circuit

See recommended terminal tightening torques in Section 6.

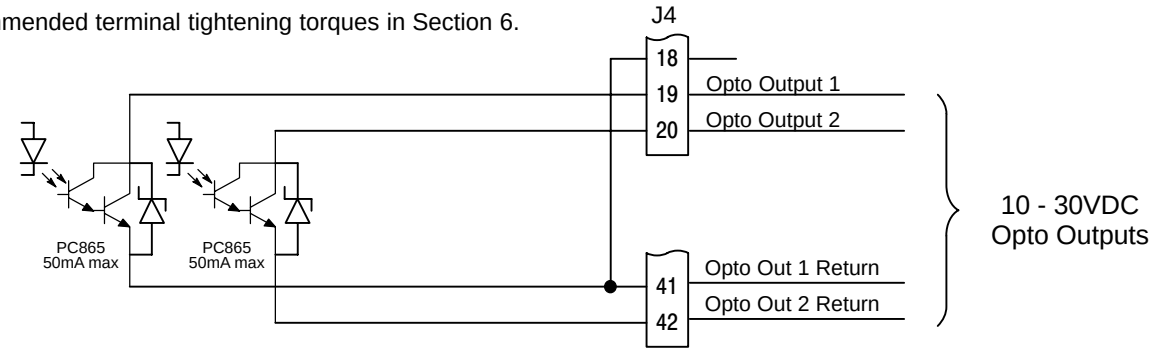

Relay Outputs

Two programmable relay outputs (Digital Outputs 3 & 4) are available at terminals J4-21 and J4-22. See Figure 3-39. Each output can be individually configured as normally open (N.O.) or normally closed (N.C.) contacts. Jumpers JP3 and JP4 select the N.O. or N.C. contacts. These outputs may be wired as shown in Figure 3-39.

Each output may be programmed to represent one output condition. The output conditions are defined in Section 4 of this manual.

Figure 3-39 Relay Output Connections

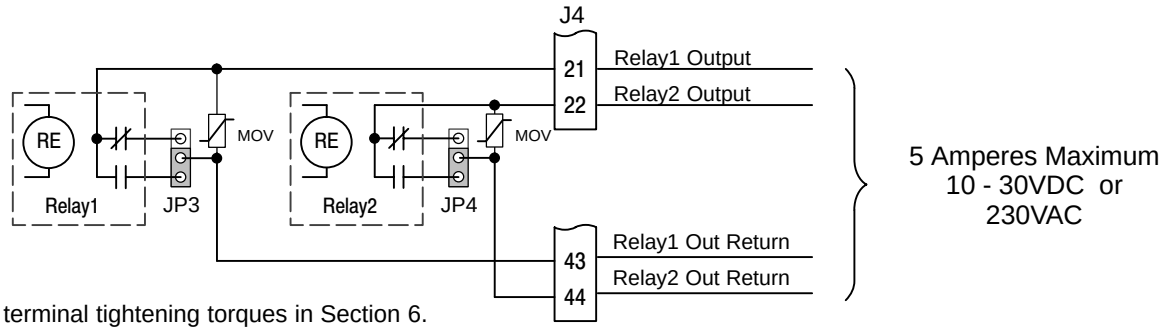

See recommended terminal tightening torques in Section 6.

Pre-Operation Checklist

Check of Electrical Items

1. Verify AC line voltage at source matches control rating.
2. Inspect all power connections for accuracy, workmanship and tightness and compliance to codes.
3. Verify control and motor are grounded to each other and the control is connected to earth ground.
4. Check all signal wiring for accuracy.
5. Be certain all brake coils, contactors and relay coils have noise suppression. This should be an R-C filter for AC coils and reverse polarity diodes for DC coils. MOV type transient suppression is not adequate.

Check of Motor and Couplings

1. Verify freedom of motion of motor shaft.
2. Verify that the motor coupling is tight without backlash.
3. Verify the holding brakes if any, are properly adjusted to fully release and set to the desired torque value.

Power Up Procedure

If you are not familiar with programming Baldor controls, refer to Section 4 of this manual before you apply power to the control.

Note: The following procedure adjusts the minimum recommended parameter values to allow operation of the control in Keypad mode for initial start-up only.

1. Verify that any enable inputs to J4-8 are open.
2. Turn power on. Be sure no faults are displayed on the keypad display.
3. Set the Level 1 Input block, Operating Mode to “Keypad”.
4. Be sure the Level 2 Protection block, Local Enable INP parameter is OFF and the Level 2 Protection block, External Trip parameter is OFF.
5. Set the Level 2 Output Limits block, “Operating Zone” parameter as desired (STD VAR TQ or QUIET VAR TQ).
6. Set the Level 2 Output Limits block, “MIN Output FREQ” parameter.
7. Set the Level 2 Output Limits block, “MAX Output FREQ” parameter.

Note: JP1 is in position 2–3 as shipped from the factory (<120Hz operation). For operation with MAX Output FREQ >120Hz, change the position of JP1 to pins 1–2. Refer to Figure 3-1 for jumper location.

8. If the desired peak current limit setting is different than is automatically set by the Operating Zone, set the Level 2 Output Limits block, “PK Current Limit” parameter as desired.
9. Enter the following motor data in the Level 2 Motor Data block parameters:
   Motor Voltage (input)
   Motor Rated Amps (FLA)
   Motor Rated Speed (base speed)
   Motor Rated Frequency
   Motor Mag Amps (no load current)
10. If External Dynamic Brake hardware is used, set the Level 2 Brake Adjust block, “Resistor Ohms” and “Resistor Watts” parameters.
11. Set the Level 1 V/HZ Boost block, “V/HZ Profile” parameter for the correct V/Hz ratio for your application.
12. If the load is a high initial starting torque type, the torque boost and accel time may need to be increased. Set the Level 1 V/HZ Boost block, “Torque Boost” and the Level 1 Accel/Decel Rate block, “Accel Time #1” as required.
13. Select and program additional parameters to suit your application.

The control is now ready for use in keypad mode or the terminal strip may be wired and the programming changed for another operating mode.

Section 4
Programming and Operation

Overview

The keypad is used to program the control parameters, to operate the motor and to monitor the status and outputs of the control by accessing the display options, diagnostic menus and the fault log.

Figure 4-1 Keypad

JOG - (Green) lights when Jog is active.
FWD - (Green) lights when FWD direction is commanded.
REV - (Green) lights when REV direction is commanded.
STOP - (Red) lights when motor STOP is commanded.

Indicator Lights

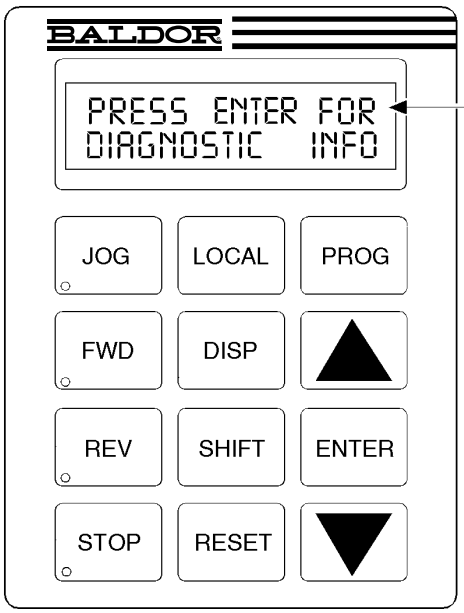

Keypad Display - Displays status information during Local or Remote operation. It also displays information during parameter setup and fault or Diagnostic Information.

JOG - Press JOG to select the preprogrammed jog speed. After the jog key has been pressed, use the FWD or REV keys to run the motor in the direction that is needed. The JOG key is only active in the local mode.

FWD - Press FWD to initiate forward rotation of the motor. (Active in Local and Jog modes).

REV - Press REV to initiate reverse rotation of the motor. (Active in Local and Jog modes).

STOP - Press STOP to initiate a stop sequence. Depending on the setup of the control, the motor will either regen or coast to a stop. This key is operational in all modes of operation unless it has been disabled by the Keypad Stop parameter in the Keypad (programming) Setup Block.

LOCAL - Press LOCAL to change between the local (keypad) and remote operation.

DISP - Press DISP to return to display mode from programming mode. Provides operational status and advances to the next display menu item.

SHIFT - Press SHIFT in the program mode to control cursor movement. Pressing the SHIFT key once moves the blinking cursor one character position to the right. While in program mode, a parameter value may be reset to the factory preset value by pressing the SHIFT key until the arrow symbols at the far left of the keypad display are flashing, then press an arrow key. In the display mode the SHIFT key is used to adjust the keypad contrast.

RESET - Press RESET to clear all fault messages (in local mode). Can also be used to return to the top of the block programming menu without saving any parameter value changes.

PROG - Press PROG to enter the program mode. While in the program mode the PROG key is used to edit a parameter setting.

▲ - (UP Arrow).
Press ▲ to change the value of the parameter being displayed. Pressing ▲ increments the value to the next greater value. Also, when the fault log or parameter list is displayed, the ▲ key will scroll upward through the list. In the local mode pressing the ▲ key will increase motor speed to the next greater value.

ENTER - Press ENTER to save parameter value changes and move back to the previous level in the programming menu. In the display mode the ENTER key is used to directly set the local speed reference. It is also used to select other operations when prompted by the keypad display.

▼ - (Down Arrow)
Press ▼ to change the value of the parameter being displayed. Pressing ▼ decrements the value to the next lesser value. Also, when the fault log or parameter list is displayed, the ▼ key will scroll downward through the list. In the local mode pressing the ▼ key will decrease motor speed to the next lesser value.

Display Mode

The control is in the display mode at all times except when in the programming mode. The keypad displays the status of the control as in the following example:

Motor Status → STP 0V 0 RPM ← Output Condition
Control Operation → LOC 0.0 A 0.0 HZ ← Value and Units

Adjusting Display Contrast

When AC power is applied to the control the keypad should display the status of the control. If there is no display visible, use the following procedure to adjust the display.

(Contrast may be adjusted in the display mode when motor is stopped or running).

Action	Description	Display	Comments
Apply Power	No visible display		
Press DISP Key	Places control in display mode		Display mode.
Press SHIFT key 2 times	Allows display contrast adjustment		
Press ▲ or ▼ Key	Adjusts display intensity	ADJUST CONTRAST ⇕ [ENTER] TO SAVE	
Press ENTER	Saves level of contrast and exits to display mode	STP 0V 0 RPM LOC 0.0 A 0.0 HZ	

Display Screens

Note: The order of display is as shown (scroll through order). However, the first display after “Baldor Motors & Drives” will be the last display you viewed before power down.

Action	Description	Display	Comments
Apply Power	Display mode showing mode, voltage, current & frequency status.	STP 0V 0 RPM LOC 0.0 A 0.0 HZ	No faults present. Local keypad mode. If in remote mode, press local for this display.
Press DISP key	Scroll to fault log block.	PRESS ENTER FOR FAULT LOG	Press ENTER to view the fault log if desired.
Press DISP key	Scroll to diagnostic info block.	PRESS ENTER FOR DIAGNOSTIC INFO	Press ENTER to view diagnostic information if desired.
Press DISP key	Scroll to local speed ref. block.	PRESS ENTER FOR LOCAL SPEED REF	Press ENTER to change motor speed.
Press DISP key	Display mode showing output frequency.	STOP FREQUENCY LOCAL 0.00 HZ	
Press DISP key	Display mode showing motor speed (based on output frequency).	STOP MOTOR SPEED LOCAL 0 RPM	
Press DISP key	Display mode showing output current.	STOP CURRENT OUT LOCAL 0.00 A	
Press DISP key	Display mode showing output voltage.	STOP VOLTAGE OUT LOCAL 0 V	

Program Mode

Use the Program Mode to customize the control for a variety of applications by programming the operating parameters. In the Display Mode, press the PROG key to access the Program Mode. To return to the Display Mode, press the DISP key. Note that when a parameter is selected alternately pressing the Disp and Prog keys will change between the Display Mode and the selected parameter. When a parameter is selected for programming, the keypad display gives you the following information:

Parameter Status

All programmable parameters are displayed with a P: in the lower left hand corner of the keypad display. If a parameter is displayed with a V:, the setting may be viewed but not changed while the motor is operating. If the parameter is displayed with an L:, the setting is locked and the security access code must be entered before any changes can be made.

Parameter Blocks Access for Programming

Use the following procedure to access parameter blocks to program the control.

Action	Description	Display	Comments
Apply Power	Keypad Display shows this opening message.	BALDOR MOTORS & DRIVES	Logo display for 5 seconds.
	If no faults and programmed for LOCAL operation.	STP 0V 0 RPM LOC 0.0 A 0.0 HZ	Display mode.
	If no faults and programmed for REMOTE operation.	STP 0 V 0 RPM REM 0.0 A 0.0 HZ	Display mode.
	If fault is displayed, refer to the Troubleshooting section of this manual.		
Press PROG key		PRESS ENTER FOR PRESET SPEEDS	Press ENTER to access preset speed parameters.
Press ▲ or ▼ key	Scroll to the ACCEL/DECEL block.	PRESS ENTER FOR ACCEL/DECEL RATE	Press ENTER to access Accel and Decel rate parameters.
Press ▲ or ▼ key	Scroll to the Level 2 Block.	PRESS ENTER FOR LEVEL 2 BLOCKS	Press ENTER to access Level 2 Blocks.
Press ENTER key	First level 2 block display.	PRESS ENTER FOR OUTPUT LIMITS	
Press ▲ or ▼ key	Scroll to Programming Exit menu.	PRESS ENTER FOR PROGRAMMING EXIT	Press ENTER to return to display mode.
Press ENTER key	Return to display mode.	STP 0V 0 RPM LOC 0.0 A 0.0 HZ	

Changing Parameter Values when Security Code Not Used

Use the following procedure to program or change a parameter already programmed into the control when a security code is not being used.

Action	Description	Display	Comments
Apply Power	Keypad Display shows this opening message.	BALDOR MOTORS & DRIVES	Logo display for 5 seconds.
	If no faults and programmed for LOCAL operation.	STP 0V 0 RPM LOC 0.0 A 0.0 HZ	Display mode. Stop LED on.
Press PROG key	Access programming mode.	PRESS ENTER FOR PRESET SPEEDS	
Press ▲ or ▼ key	Scroll to Level 1 Input Block.	PRESS ENTER FOR INPUT	Press ENTER to access INPUT block parameter.
Press ENTER key	Access Input Block.	OPERATING MODE P: KEYPAD	Keypad mode shown is the factory setting.
Press ENTER key	Access Operating Mode.	OPERATING MODE ▲▼ KEYPAD	Keypad mode shown is the factory setting.
Press ▲ key	Scroll to make your selection.	OPERATING MODE ▲▼ STANDARD RUN	At the flashing cursor, select mode desired. Standard run is shown.
Press ENTER	Save selection to memory.	OPERATING MODE P: STANDARD RUN	Press ENTER to save selection.
Press ▲ key	Scroll to menu exit.	PRESS ENTER FOR MENU EXIT	
Press ENTER key	Return to Input Block.	PRESS ENTER FOR INPUT	
Press DISP key	Return to Display Mode.	STP 0V 0 RPM LOC 0.0 A 0.0 HZ	Typical display mode.

Reset Parameters to Factory Settings

Sometimes it is necessary to restore the parameter values to the factory settings. Follow this procedure to do so.

Note: All parameter values already programmed will be changed when resetting the control to factory settings.

Action	Description	Display	Comments
Apply Power	Keypad Display shows this opening message.	BALDOR MOTORS & DRIVES	Logo display for 5 seconds.
	If no faults and programmed for LOCAL operation.	STP 0V 0 RPM LOC 0.0 A 0.0 HZ	Display mode. Stop LED on.
Press PROG key	Enter program mode.	PRESS ENTER FOR PRESET SPEEDS	
Press ▲ or ▼ key	Scroll to Level 2 Blocks.	PRESS ENTER FOR LEVEL 2 BLOCKS	
Press ENTER key	Select Level 2 Blocks.	PRESS ENTER FOR OUTPUT LIMITS	
Press ▲ or ▼ key	Scroll to the Miscellaneous block.	PRESS ENTER FOR MISCELLANEOUS	
Press ENTER key	Select Miscellaneous block.	RESTART AUTO/MAN P: MANUAL	
Press ▲ key	Scroll to Factory Settings parameter.	FACTORY SETTINGS P: NO	
Press ENTER key	Access Factory Settings parameter.	FACTORY SETTINGS ⇕ ☐ NO	☐ represents blinking cursor.
Press ▲ key	Scroll to STD SETTINGS, to choose original factory settings.	FACTORY SETTINGS ⇕ ☐ STD SETTINGS	For 50Hz motors, set to 50Hz/400 VOLTS.
Press ENTER key	Restores factory settings.	FACTORY SETTINGS P:LOADING PRESETS	"Loading Presets" is first message "Operation Done" is next "No" is displayed last.
Press ▲ key	Scroll to menu exit.	PRESS ENTER FOR MENU EXIT	
Press ENTER key	Return to Miscellaneous block.	PRESS ENTER FOR MISCELLANEOUS	
Press DISP key	Return to display mode.	STP 0V 0 RPM LOC 0.0 A 0.0 HZ	Display mode. Stop LED on.

Initialize New Software EEPROM

After a new EEPROM is installed, the control will automatically initialize the new software version and memory locations as if “STD Settings” was selected. If you need to initialize the control to the 50Hz / 400Volts” settings, use the following procedure.

Note: All parameter values already programmed will be changed when resetting the control to factory settings.

Action	Description	Display	Comments
Apply Power	Keypad Display shows this opening message.	BALDOR MOTORS & DRIVES	Logo display for 5 seconds.
	If no faults and programmed for LOCAL operation.	STP 0V 0 RPM LOC 0.0 A 0.0 HZ	Display mode. Stop LED on.
Press PROG key	Enter program mode.	PRESS ENTER FOR PRESET SPEEDS	
Press ▲ or ▼ key	Scroll to Level 2 Blocks.	PRESS ENTER FOR LEVEL 2 BLOCKS	
Press ENTER key	Select Level 2 Blocks.	PRESS ENTER FOR OUTPUT LIMITS	
Press ▲ or ▼ key	Scroll to the Miscellaneous block.	PRESS ENTER FOR MISCELLANEOUS	
Press ENTER key	Select Miscellaneous block.	RESTART AUTO/MAN P: MANUAL	
Press ▲ key	Scroll to Factory Settings parameter.	FACTORY SETTINGS P: NO	
Press ENTER key	Access Factory Settings parameter.	FACTORY SETTINGS ▲▼ ☐ NO	☐ represents blinking cursor.
Press ▲ key	Scroll to STD SETTINGS, to choose original factory settings.	FACTORY SETTINGS ▲▼ ☐ STD SETTINGS	For 50Hz motors, set to 50Hz/400 VOLTS.
Press ENTER key	Restores factory settings.	FACTORY SETTINGS P:LOADING PRESETS	“Loading Presets” is first message “Operation Done” is next “No” is displayed last.
Press ▲ key	Scroll to menu exit.	PRESS ENTER FOR MENU EXIT	
Press ENTER key	Return to display mode.	STOP FREQUENCY LOCAL 0.00 HZ	Display mode. Stop LED on.
Press DISP key	Scroll to diagnostic info block.	PRESS ENTER FOR DIAGNOSTIC INFO	If you wish to verify the software version, enter diagnostic info.
Press ENTER key	Access diagnostic information.	STOP SPEED REF LOCAL 0 RPM	Displays commanded speed, direction of rotation, Local/ Remote and motor speed.
Press DISP key	Display mode showing software version and revision installed in the control.	SOFTWARE VERSION XXX-X.XX	Verify new software version.
Press DISP key	Displays exit choice.	PRESS ENTER FOR DIAGNOSTIC EXIT	Press ENTER to exit diagnostic information.

Operation Examples

Operating the Control from the Keypad

If the control is configured for remote or serial control, the LOCAL Mode must be activated before the control may be operated from the keypad. To activate the LOCAL Mode, first the motor must be stopped using the keypad STOP key (if enabled), remote commands or serial commands.

Note: Pressing the keypad STOP key (if enabled) will automatically issue a motor stop command and change to LOCAL mode.

When the motor has stopped, the LOCAL Mode is activated by pressing the “LOCAL” key. Selection of the LOCAL Mode overrides any remote or serial control inputs except for the External Trip input, Local Enable Input or STOP input.

The control can operate the motor in three (3) different ways from the keypad.

1. JOG Command.
2. Speed adjustment with Keypad entered values.
3. Speed adjustment using the Keypad arrow keys.

Note: If the control has been configured for Keypad in the operating mode parameter (level 1, input block), then no other means of operation is permitted other than from the keypad.

Accessing the Keypad JOG Command

Action	Description	Display	Comments
Apply Power	Keypad Display shows this opening message.	BALDOR MOTORS & DRIVES	Logo display for 5 seconds.
	If no faults and programmed for LOCAL operation.	STP 0V 0 RPM LOC 0.0 A 0.0 HZ	Display mode. Stop LED on.
Press JOG key	Access programmed JOG speed.	STOP FREQUENCY LOCAL 0.00 HZ	JOG key LED on.
Press and hold FWD or REV key	Move control forward or reverse at JOG speed.	FWD FREQUENCY LOCAL 7.00 HZ	Control runs while FWD or REV key is pressed. JOG & FWD (or REV) LED’s on.
Press JOG key	Disables JOG mode.	STOP FREQUENCY LOCAL 0.00 HZ	JOG LED off. Stop key LED on.

Speed Adjustment using Local Speed Reference

Action	Description	Display	Comments
Apply Power	Keypad Display shows this opening message.	BALDOR MOTORS & DRIVES	Logo display for 5 seconds.
	If no faults and programmed for LOCAL operation.	STP 0V 0 RPM LOC 0.0 A 0.0 HZ	Display mode. Stop LED on.
Press ENTER key	Select the local speed reference.	LOCAL SPEED REF ▲▼ 000.00 0.00 HZ	
Press SHIFT key	Move blinking cursor right one digit.	LOCAL SPEED REF ▲▼ 000.00 0.00 HZ	☐ represents blinking cursor.
Press ▲ key	Increase tens value by one digit.	LOCAL SPEED REF ▲▼ 010.00 0.00 HZ	
Press ENTER key	Save new value and return to display mode.	STOP FREQUENCY LOCAL 0.00 HZ	
Press FWD or REV key	Motor runs FWD or REV at commanded speed.	FWD FREQUENCY LOCAL 10.00 HZ	FWD (REV) LED on.
Press STOP key	Motor stop command issued.	STOP FREQUENCY LOCAL 0.00 HZ	Display mode. Stop LED on.

Speed Adjustment Using Arrow Keys

Action	Description	Display	Comments
Apply Power	Keypad Display shows this opening message.	BALDOR MOTORS & DRIVES	Logo display for 5 seconds.
	If no faults and programmed for LOCAL operation.	STP 0V 0 RPM LOC 0.0 A 0.0 HZ	Display mode. Stop LED on.
Press FWD or REV key	Motor runs FWD or REV at selected speed.	FWD FREQUENCY LOCAL 0.00 HZ	FWD key LED on.
Press ▲ key	Increase motor speed.	FWD FREQUENCY LOCAL 20.00 HZ	Display mode.
Press ▼ key	Decrease motor speed.	FWD FREQUENCY LOCAL 10.00 HZ	Display mode.
Press STOP key	Motor stop command issued.	STOP FREQUENCY LOCAL 0.00 HZ	Display mode. Stop LED on.
Press FWD or REV key	Motor runs FWD or REV at commanded speed.	FWD FREQUENCY LOCAL 10.00 HZ	Motor runs at previously set speed.
Press STOP key	Motor stop command issued.	STOP FREQUENCY LOCAL 0.00 HZ	Display mode. Stop LED on.

Security System Changes

Access to programmed parameters can be protected from change by the security code feature. The Security Code is defined by setting the Level 2 Security Control block. To implement the security feature, use the following procedure:

Action	Description	Display	Comments
Apply Power	Keypad Display shows this opening message.	BALDOR MOTORS & DRIVES	Logo display for 5 seconds.
	If no faults and programmed for LOCAL operation.	STP 0V 0 RPM LOC 0.0 A 0.0 HZ	Display mode. Stop LED on.
Press PROG key	Enter program mode.	PRESS ENTER FOR PRESET SPEEDS	
Press ▲ or ▼ key	Scroll to Level 2 Blocks.	PRESS ENTER FOR LEVEL 2 BLOCKS	
Press ENTER key	Access Level 2 Blocks.	PRESS ENTER FOR OUTPUT LIMITS	
Press ▲ or ▼ key	Scroll to the Security Control block.	PRESS ENTER FOR SECURITY CONTROL	
Press ENTER key	Access the Security Control block.	SECURITY STATE P: OFF	
Press ▲ key	Scroll to the Access Code parameter.	ACCESS CODE P: 9999	
Press ENTER key	The Access Code parameter can be changed.	ACCESS CODE P: 9999 9999	☐ represents blinking cursor.
Press ▼ key	Use ▼ key to change value. Example: 8999.	ACCESS CODE P: 8999 9999	☐ represents blinking cursor.
Press ENTER key	Save Access Code parameter	ACCESS CODE P: 9999	Keypad Display will not show user access code. Record its' value for future reference.
Press ▼ key	Scroll to Security State.	SECURITY STATE P: OFF	
Press ENTER key	Access Security State parameter.	SECURITY STATE ⇕ ☐ OFF	☐ represents blinking cursor.
Press ▲ key	Select Local Security.	SECURITY STATE ⇕ LOCAL SECURITY	
Press ENTER key	Save selection.	SECURITY STATE P: LOCAL SECURITY	P: will change to L: after returning to display mode for longer than time set in Access Time parameter.
Press DISP key	Return to Display mode.	STP 0V 0 RPM LOC 0.0 A 0.0 HZ	Typical display mode.

Note: Please record your access code and store it in a safe place. If you cannot gain entry into parameter values to change a protected parameter, please contact Baldor. Be prepared to give the 5 digit code located on the lower right side of the Keypad Display at the Enter Code parameter prompt.

Changing Parameter Values with a Security Code in Use

Action	Description	Display	Comments
Apply Power	Keypad Display shows this opening message.	BALDOR MOTORS & DRIVES	Logo display for 5 seconds.
	If no faults and programmed for LOCAL operation.	STP 0V 0 RPM LOC 0.0 A 0.0 HZ	Display mode. Stop LED on.
Press PROG key	Enter program mode.	PRESS ENTER FOR PRESET SPEEDS	
Press ▲ or ▼ key	Scroll to Input block.	PRESS ENTER FOR INPUT	
Press ENTER key	Access Input block to change Operating Mode setting.	OPERATING MODE L: KEYPAD	L: shows parameter is Locked.
Press ENTER key	When security on, parameter values cannot be changed.	** ENTER CODE ** 9999 23956	
Press ▼ key	Enter the Access Code . Example: 8999.	** ENTER CODE ** 8999 23956	☐ represents blinking cursor.
Press ENTER key		OPERATING MODE KEYPAD	
Press ▲ or ▼ key	Scroll to make your selection.	OPERATING MODE STANDARD RUN	
Press ENTER	Save selected parameter	OPERATING MODE P: STANDARD RUN	P: will change to L: after you return to Display mode for longer than the time specified in the Access Time parameter.
Press ▲ or ▼ key	Scroll to Menu Exit.	PRESS ENTER FOR MENU EXIT	
Press ENTER key	Returns to Input block.	PRESS ENTER FOR INPUT	
Press DISP key	Return to Display mode.	STP 0V 0 RPM LOC 0.0 A 0.0 HZ	Typical display mode.

Note: Please record your access code and store it in a safe place. If you cannot gain entry into parameter values to change a protected parameter, please contact Baldor. Be prepared to give the 5 digit code located on the lower right side of the Keypad Display at the Enter Code prompt.

Security System Access Timeout Parameter Change

Action	Description	Display	Comments
Apply Power	Keypad Display shows this opening message.	BALDOR MOTORS & DRIVES	Logo display for 5 seconds.
	If no faults and programmed for LOCAL operation.	STP 0V 0 RPM LOC 0.0 A 0.0 HZ	Display mode. Stop LED on.
Press PROG key	Enter program mode.	PRESS ENTER FOR PRESET SPEEDS	
Press ▲ or ▼ key	Scroll to Level 2 Blocks.	PRESS ENTER FOR LEVEL 2 BLOCKS	
Press ENTER key	Access Level 2 Blocks.	PRESS ENTER FOR OUTPUT LIMITS	
Press ▲ or ▼ key	Scroll to the Security Control block.	PRESS ENTER FOR SECURITY CONTROL	
Press ENTER key	Access the Local Security block.	SECURITY STATE L:LOCAL SECURITY	
Press ▲ key	Scroll to the Access Timeout parameter.	ACCESS TIMEOUT L: 0 SEC	
Press ENTER key	Attempt to access the Access Timeout parameter.	•• ENTER CODE •• ▲▼ 9999 23956	☐ represents blinking cursor.
Press ▼ key	Use ▼ key to change value. Example: 8999.	•• ENTER CODE •• ▲▼ 8999 23956	Note: Ignore the 5 digit number to the right (example: 23956).
Press ENTER key	Save Access Code parameter	ACCESS TIMEOUT ▲▼ 000 0 S	Security code entered is correct. All parameters may be changed.
Press SHIFT key.	Move cursor right on digit.	ACCESS TIMEOUT ▲▼ 0 0 0 0 S	Access Timeout can be any value between 0 and 600 seconds.
Press ▲ key 3 times	Change the 0 to 3.	ACCESS TIMEOUT ▲▼ 0 3 0 0 SEC	Example: 30 seconds.
Press ENTER key	Save value.	ACCESS TIMEOUT P: ☐ 30 S	P: will change to L: after you return to Display mode for longer than the time specified in the Access Time parameter.
Press DISP key	Return to Display mode.	STP 0V 0 RPM LOC 0.0 A 0.0 HZ	Typical display mode.

Note: Please record your access code and store it in a safe place. If you cannot gain entry into parameter values to change a protected parameter, please contact Baldor. Be prepared to give the 5 digit code located on the lower right side of the Keypad Display at the Enter Code prompt.

Parameter Definitions (Version S15V–5.00)

LEVEL 1 BLOCKS		LEVEL 2 BLOCKS	
Preset Speeds	**Input**	**Output Limits**	**Brake Adjust**
Preset Speed #1	Operating Mode	Operating Zone	Resistor Ohms
Preset Speed #2	Command Select	Min Output Frequency	Resistor Watts
Preset Speed #3	ANA CMD Inverse	Max Output Frequency	DC Brake Voltage
Preset Speed #4	ANA CMD Offset	PK Current Limit	DC Brake Frequency
Preset Speed #5	ANA CMD Gain	PWM Frequency	Brake on Stop
Preset Speed #6	CMD SEL Filter	REGEN Limit	Brake on Reverse
Preset Speed #7		REGEN Limit ADJ	Stop Brake Time
Preset Speed #8	**Output**		Brake on Start
Preset Speed #9	Digital Out #1	**Custom Units**	Start Brake Time
Preset Speed #10	Digital Out #2	MAX Decimal Display	
Preset Speed #11	Digital Out #3	Value at Speed	**Process Control**
Preset Speed #12	Digital Out #4	Value DEC Places	Process Feedback
Preset Speed #13	Zero SPD Set PT	Value Speed REF	Process Inverse
Preset Speed #14	At Speed Band	Units of Measure	Setpoint Source
Preset Speed #15	Set Speed Point	Units of MEAS 2	Setpoint Command
	Analog Out #1		Set PT ADJ Limit
Accel / Decel Rate	Analog Out #2	**Protection**	At Setpoint Band
Accel Time #1	Analog Scale #1	External Trip	Process PROP Gain
Decel Time #1	Analog Scale #2	Local Enable INP	Process INT Gain
S-Curve #1			Process DIFF Gain
Accel Time #2	**V/HZ and Boost**	**Miscellaneous**	Follow I:O Out
Decel Time #2	Ctrl Base Frequency	Restart Auto/Man	Encoder Lines
S-Curve #2	Torque Boost	Restart Fault/Hr	
	Dynamic Boost	Restart Delay	**Skip Frequency**
Jog Settings	Slip Comp Adj	Language Select	Skip Frequency #1
Jog Speed	V/HZ Profile	Factory Settings	Skip Band #1
Jog Accel Time	V/HZ 3-PT Volts	STABIL ADJ Limit	Skip Frequency #2
Jog Decel Time	V/HZ 3-PT Frequency	Stability Gain	Skip Band #2
Jog S-Curve	Max Output Volts		Skip Frequency #3
		Security Control	Skip Band #3
Keypad Setup		Security State	
Keypad Stop Key		Access Timeout	**Synchro Starts**
Keypad Stop Mode		Access Code	Synchro Starts
Keypad Run Fwd			Sync Start Frequency
Keypad Run Rev		**Motor Data**	Sync Scan V/F
Keypad Jog Fwd		Motor Voltage	Sync Setup Time
Keypad Jog Rev		Motor Rated Amps	Sync Scan Time
3 Speed Ramp		Motor Rated Speed	Sync V/F Recover
Switch on Fly		Motor Rated Frequency	Sync Direction
LOC. Hot Start		Motor Mag Amps	
			Communications
			Protocol
			Baud Rate
			Address

Table 4-1 Parameter Block Definitions Level 1

Block Title	Parameter	Description
PRESET SPEEDS	Preset Speeds #1 – #15	Allows selection of 15 predefined motor operating speeds. Each speed may be selected using external switches connected to the control terminal strip (J4). For motor operation, a motor direction command must be given along with a preset speed command (at J4).
ACCEL/DECEL RATE	Accel Time #1,2	Accel time is the number of seconds required for the motor to increase frequency at a linear rate from 0 Hz to the frequency specified in the “Max Output Frequency” parameter in the Level 2 Output Limits block.
	Decel Time #1,2	Decel time is the number of seconds required for the motor to decrease frequency at a linear rate from the frequency specified in the “Max Output frequency” parameter to 0 Hz.
	S-Curve #1,2	S-Curve is a percentage of the total Accel or Decel time and provides smooth starts and stops. Figure 4-2 illustrates how motor acceleration is changed using a 40% S-Curve. 0% represents no “S” and 100% represents full “S” with no linear segment. Example: Maximum Output frequency =100 Hz; Preset frequency = 50 Hz, Accel Time=10 Sec. In this example, control output frequency will be 50Hz 5 seconds after commanded. Note: Accel #1, Decel #1 and S-Curve #1 are associated together. Likewise, Accel #2, Decel #2 and S-Curve #2 are associated together. These associations can be used to control any Preset frequency or External Speed Command (Pot). Note: Since the motor design uses rotor slip to produce torque, the motor speed will not necessarily increase/decrease in a linear manner with motor frequency. Note: If faults (motor trips) occur during rapid Accel or Decel, selecting an S-curve may eliminate the faults without affecting the overall ramp time. Some adjustment of Accel, Decel and S-Curve settings may be necessary to optimize your application.
JOG SETTINGS	Jog Speed	Jog Speed is the commanded frequency used during jog. Jog speed can be initiated from the keypad or terminal strip. At the keypad, press JOG key and the FWD or REV key. At the terminal strip, the JOG input (J4-12) and Forward (J4-9) or Reverse (J4-10) must be closed and maintained. Process control mode is different. If the terminal strip Process Mode input (J4-13) is closed, pressing JOG (or closing J4-14) will cause the drive to move (without pressing FWD or REV). The JOG input also acts as a RUN Command.
	Jog Accel Time	Jog Accel Time is the Accel Time used during jog.
	Jog Decel Time	Jog Decel Time is the Decel Time used during jog.
	Jog S-Curve	Jog S-Curve is the S-Curve used during jog.

Figure 4-2 40% S-Curve Example

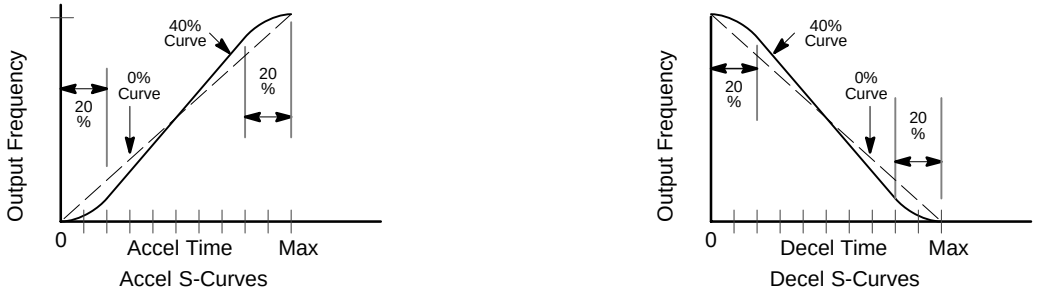

Table 4-1 Parameter Block Definitions Level 1 - Continued

Block Title	Parameter	Description
KEYPAD SETUP	Keypad Stop Key	Remote OFF – Stop key on keypad is not active during remote operations. Remote ON – Allows keypad STOP key to initiate motor stop during remote or serial operation (if set to Remote ON). Pressing STOP initiates the stop command and automatically selects Local mode.
	Keypad Stop Mode	Cause the motor to coast to a stop or regen to a stop for a stop command. In coast, the motor is turned off and allowed to coast to a stop. In regen, the voltage and frequency to the motor is reduced at a rate set by decel time.
	Keypad Run FWD	OFF disables FWD key in local mode. ON makes the keypad FWD key active in Local.
	Keypad Run REV	OFF disables REV key in local mode. ON makes the keypad REV key active in Local.
	Keypad Jog FWD	OFF disables FWD key in local jog mode. ON makes the keypad FWD key active in Local Jog.
	Keypad Jog REV	OFF disables REV key in local jog mode. ON makes the keypad REV key active in Local Jog.
	3 Speed Ramp	Increases speed in 3 steps while ▲ or ▼ key is pressed. Minimum increment is 0.01Hz when ON (minimum increment is 1.0Hz when OFF).
	Switch on Fly	Allows switching from local to remote mode or back to local without stopping the drive.
	Loc. Hot Start	Loc. Hot Start - The STOP input at J4-11 in the Keypad mode is enabled (when ON).
INPUT	Operating Mode	Eleven “Operating Modes” are available. Choices are: Keypad, Standard Run 3 wire, 15SPD 2 wire, Fan Pump 2 Wire, Fan Pump 3 Wire, Serial, Process Control, 3 Speed Analog 2 Wire, 3 Speed Analog 3 Wire, Electronic Pot - 2 Wire and Electronic Pot - 3 Wire. External connections to the control are made at the J4 terminal strip (wiring diagrams are shown in Section 3 “Selection of Operating Mode”).
	Command Select	Selects the external speed reference to be used. Potentiometer is the most simple method of speed control. Select Potentiometer and connect a 5KΩ pot at J4-1, J4-2, and J4-3. 0-5 or 0-10VDC input is selected when the input signal is applied to J4-4 and J4-5. 4-20mA selection should be considered if long distance is required between the external device and the control. Current loop allows longer cable lengths at J4-4 and J4-5 with less attenuation of the command signal. Note: When using the 4-20mA input, the JP2 jumper on the main control board must be moved to pins 1 and 2 (Figure 3-2). 10VOLT EXB - selects the optional High Resolution I/O expansion board if installed. 4-20mA EXB - selects the 4-20mA input of the optional High Resolution I/O expansion board if installed. 3-15 PSI selects the optional 3-15 PSI expansion board if installed. Tachometer EXB - selects the optional DC Tachometer expansion board if installed. Pulse Follower EXB selects the optional Master Pulse Follower Expansion board if installed.
	ANA CMD Inverse	“OFF” will cause a low input voltage (e.g. 0VDC) to be a low motor speed command and a maximum input voltage (e.g. 10VDC) to be a maximum motor speed command. “ON” will cause a low input voltage (e.g. 0VDC) to be a maximum motor speed command and a maximum input voltage (e.g. 10VDC) to be a low motor speed command.
	ANA CMD Offset	Provides an offset to the Analog Input to minimize signal drift. For example, if the minimum speed signal is 1VDC (instead of 0VDC) the ANA CMD Offset can be set to -10% so the minimum voltage input is seen by the control as 0VDC.
	ANA CMD Gain	Provides a gain factor for the analog speed reference input signal. For example, if the analog speed reference signal is 0 - 9VDC, setting the ANA CMD Gain to 111% allows the control to see 0 - 10VDC as the input signal.
	CMD SEL Filter	Provides filtering for the analog speed reference input signal. The greater the number (0 - 6) the more noise filtering is provided. For faster response, use a smaller number.

Table 4-1 Parameter Block Definitions Level 1 - Continued

Block Title	Parameter	Description
OUTPUT	Digital Out #1 – #4 (Opto 1, Opto 2 Relay 1 Relay 2)	Four digital outputs that have two operating states, ON or OFF. The Opto outputs and the relay outputs may be configured to any of the following conditions: **Condition Description** Ready - Active when power is applied and no faults are present. Zero Speed - Active when output frequency to motor is less than the value of the "Zero SPD Set Pt" Level 1 Output parameter. At Speed - Active when output frequency is within the commanded range defined by the "At Speed Band" Level 1 Output parameter. At Set Speed - Active when output frequency is at or greater than the "Set Speed Point" Level 1 Output parameter. Overload - Output is active if there is an overload fault caused by a time-out when the output current is greater than rated current. Keypad Control - Active when control is in local keypad control. Fault - Active when a fault condition is present. Drive On - Active when control is "Ready" and is being commanded to operate the motor. Reverse - Active when control is running in the reverse direction. Process Error - Active when the PID control loop process is outside the range specified by the Level 2 Process Control block, AT Setpoint Band parameter.
	Zero SPD Set PT	The output frequency at which the zero speed opto output becomes active (turns on). When the output frequency is less than the Zero SPD Set PT, the opto output becomes active. This is useful in applications where a motor brake will be interlocked into the operation of the motor control.
	At Speed Band	A frequency band within which the at speed opto output becomes active (turns on). For example, if the at speed band is set to ±5Hz the opto output becomes active when the output frequency to the motor is within 5Hz of the commanded motor frequency. This is useful when another machine must not start (or stop) until the motor reaches operating speed.
	Set Speed Point	The frequency at which the at set speed opto output becomes active (turns on). When the frequency is greater than the set speed point parameter, the opto output becomes active. This is useful when another machine must not start (or stop) until the motor exceeds a predetermined speed.

Table 4-1 Parameter Block Definitions Level 1 - Continued

Block Title	Parameter	Description
OUTPUT Continued	Analog Output #1 and #2	Two Analog outputs may be configured so a 0-5VDC (0-10VDC or 4-20mA with High Resolution EXB) output signal represents one of the following conditions: **Condition** — **Description** Frequency - Represents the output frequency where 0VDC = 0 Hz and +5VDC = MAX Hz (slip frequency compensation is not included). Freq Command - Represents the commanded frequency where 0VDC = 0 Hz and +5VDC = MAX Hz. AC Current - Represents the value of the output current where 0VDC = 0A and +5VDC = Full load current (A_{RMS}). AC Voltage - Represents the value of the output voltage where 0VDC = 0 VAC and +5VDC = Control Input Voltage. Torque - Represents load torque where 0V = –100% torque (rated torque), and +5V = 100% torque (rated torque). Power - Represents motor power where 0V = –100% rated power, and +5V = 100% rated power. Bus Voltage - Represents motor power where 0V = 0VDC and 2.5V = 325VDC for 230VAC input (650VDC for 460VAC input). Process Fdbk - Represents the process feedback input where 0V = –100% feedback, and +5V = 100% feedback. Setpoint CMD - Represents Setpoint Command input where 0V = –100% command, and +5V = 100% command. Zero Cal - Output is 0VDC and can be used to calibrate an external meter. 100% Cal - Output is 5VDC and can be used to calibrate full scale for an external meter.
	Analog Scale #1 & #2 -	Scale factor for the Analog Output voltage. Useful to set the full scale range for external meters.

Table 4-1 Parameter Block Definitions Level 1 - Continued

Block Title	Parameters	Description
V/Hz and Boost	CTRL Base FREQ	Represents the point on the V/Hz profile where output voltage becomes constant with increasing output frequency. This is the point at which the motor changes from constant or variable torque to constant horsepower operation. In some cases the Max Output Volts and CTRL Base Freq values can be manipulated to provide a wider constant horsepower speed range than is normally available with the motor.
	Torque Boost	Adjusts the amount of motor starting torque. The boost adjustment alters the output voltage to the motor from the normal voltage value by increasing or decreasing the starting voltage by fixed values as defined by the V/Hz profile. The factory setting is suitable for most applications. Increasing the boost may cause the motor to overheat. If adjustment is required, increase the boost in small increments until the motor shaft just starts to rotate with maximum load applied.
	Dynamic Boost	The Dynamic Boost parameter can be adjusted to provide more or less running torque from the motor than is available with the factory setting. The boost adjustment alters the output voltage to the motor from the normal voltage value by increasing or decreasing the voltage per frequency unit as defined by the V/Hz profile.
	Slip Comp Adjustment	Compensates for varying load conditions during normal operation. This parameter sets the maximum allowable variation in output frequency under varying load conditions (changes of output current). As motor current increases toward 100% of Motor Rated Amps, output frequency is automatically increased to compensate for slip.
	V/Hz Profile	Sets the Volts/Frequency ratio of the control output (to the motor) for all values of output voltage versus output frequency up to the control base frequency. Because motor voltage is related to motor current, motor voltage can then be related to motor torque. A change in the V/Hz profile can adjust how much torque is available from the motor at various speeds. 3PT profile - allows two linear V/Hz segments by setting the V/Hz 3PT Volts and V/Hz 3PT Frequency parameters. 33%, 67% and 100% Square Law profiles are preset profiles that provide different variations of the squared reduced V/Hz profile. These profiles are shown in Figure 4-3.
	V/Hz 3-PT Volts	The output voltage associated with the 3PT Frequency parameter.
	V/Hz 3-PT Frequency	The output frequency associated with the 3PT Volts parameter.
	Max Output Volts	The maximum output voltage available to the motor from the control. This is useful if the motor rated voltage is less than the input line voltage. In some cases the Max Output Volts and the CTRL Base Frequency parameter values can be adjusted to provide a wider constant horsepower speed range than is normally available.
LEVEL 2 BLOCK		ENTERS LEVEL 2 MENU

Figure 4-3 Volts/Hertz Profile

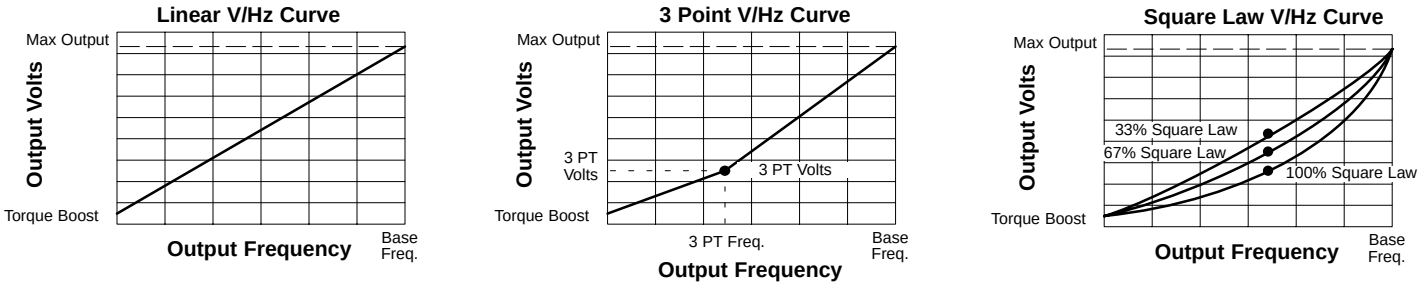

Table 4-2 Parameter Block Definitions Level 2

Block Title	PARAMETER	Description
OUTPUT LIMITS	Operating Zone	The PWM operating zone; Standard 2.5kHz or Quiet 8.0kHz, Variable Torque. Variable Torque allows 115% peak overload for 60 seconds.
	MIN Output Frequency	The minimum output frequency to the motor. During operation, the output frequency will not be allowed to go below this value except for motor starts from 0 Hz or during dynamic braking to a stop.
	MAX Output Frequency	The maximum output frequency to the motor.
	PK Current Limit	The maximum output (peak) current to the motor. Values above 100% of the rated current may be available depending upon the operating zone selected.
	PWM Frequency	The frequency that the output transistors are switched. PWM should be as low as possible to minimize stress on the output transistors and motor windings. PWM frequency is also referred to as “Carrier” frequency.
	REGEN Limit	Automatically increases the output frequency during REGEN periods for cyclic loads. The output frequency will increase at the rate set by REGEN Limit ADJ but will not exceed the Level 2, Output Limits “MAX Output Frequency” parameter value.
	REGEN Limit ADJ	The amount of automatic frequency adjustment that occurs when REGEN Limit is turned ON.
CUSTOM UNITS	Max Decimal Places	The number of decimal places of the Output Rate display on the Keypad display. This value will be automatically reduced for large values. The output rate display is only available if the “Value At Speed” parameter value is non-zero.
	Value At Speed	Sets the desired output rate value per motor RPM. Two numbers are displayed on the keypad display (separated by a slash “/”). The first number (left most) is the value you want the keypad to display at a specific motor speed (second number, right most). A decimal may be inserted into the numbers by placing the flashing cursor over the up/down arrow.
	Value DEC Places	Serial Only. *
	Value Speed REF	Serial Only. *
	Units of Measure	Allows you to specify units of measure to be displayed on the Output Rate display. Use the shift and arrow keys to scroll to the first and successive characters. If the character you want is not displayed, move the flashing cursor over the special up/down character arrow on the left side of the display. Use the up/down arrows and the shift key to scroll through all 9 character sets. Use the ENTER key to save your selection.
	Units of MEAS 2	Serial Only. *
PROTECTION	External Trip	OFF - External Trip is Disabled. (Ignores J4-16 switched input). ON - External Trip is enabled. If a normally closed contact at J4-16 (to J4-17) is opened, an External Trip fault will occur and cause the drive to shut down.
	Local Enable INP	OFF - Local Enable input is Disabled. (Ignores J4-8 switched input). ON - A normally closed contact at J4-8 (to J4-17) is required to ENABLE the control when operating in the Keypad mode.

* Note: Serial Commands. When using the serial command option, the “Value AT Speed”, “Value DEC Places”, and “Value Speed REF” parameters must be set. The Value AT Speed parameter sets the desired output rate per increment of motor speed. The Value DEC Places sets the desired number of decimal places of the Value AT Speed number. The Value Speed REF sets the increment of motor speed for the desired output rate.

The Units of Measure parameter sets the two left-most characters of the custom units display while the Units of MEAS 2 parameter sets the two right most characters. For example, if “ABCD” is the custom units, “AB” is set in the Level 2 Custom Units block, Units of Measure parameter and “CD” is set in the Level 2 Custom Units block, Units of MEAS 2 parameter.

Note: Custom Display Units. The output rate display is only available if the Value AT Speed parameter has been changed from a value of 0 (zero). To access the Output Rate display, use the DISP key to scroll to the Output Rate display.

Table 4-2 Parameter Block Definitions Level 2 Continued

Block Title	Parameter	Description
MISCELLANEOUS	Restart Auto/Man	**Manual** Power Up Start – If set to MAN and a run command (enable line & FWD or REV command) is present at power up, the motor will not run. The run command must be removed then reapplied to start operation. The run command refers to the enable plus direction (FWD or REV) lines. Restart after Fault – If a fault occurs during operation, the control must be manually reset to resume operation. **Automatic** Power Up Start – If set to AUTO and a run command (enable line & FWD or REV command) is present at power up, the control will automatically start. Restart after Fault – If a fault occurs during operation, the control will automatically reset (after the restart delay time) to resume operation if the Fault/Hr is set to a non zero value. 3 Wire modes, AUTO start after a fault or loss of power will not occur because the momentary contacts are open and the run command must again be applied. The run command refers to the enable plus direction (FWD or REV) lines.
	Restart Fault/Hr	The maximum number of automatic restart attempts before requiring a manual restart. After one hour without reaching the maximum number of faults or if power is turned off and on again, the fault count is rest to zero.
	Restart Delay	The amount of time allowed after a fault condition for an automatic restart to occur. Useful to allow sufficient time to clear a fault condition before restart is attempted.
	Language Select	Selects English or other language characters for keypad display.
	Factory Settings	Restores factory settings for all parameter values. NO Does not change parameter values. Select STD Settings and press “ENTER” key to restore standard 60Hz factory parameter values. The keypad Display will show “Operation Done” then “NO” when completed. Select 50Hz / 400Hz and press “ENTER” key to restore factory parameter values if using a motor with a base frequency of 50Hz.
	STABIL ADJ Limit	The maximum range of adjustment at low output frequency and light load conditions to eliminate instability. Factory setting is good for most applications.
	Stability Gain	The response time if instability occurs. Factory setting is good for most applications.

Table 4-2 Parameter Block Definitions Level 2 Continued

Block Title	Parameter	Description
SECURITY CONTROL	Security State	Off - No security access code required to change parameter values. Local Security - Requires security access code to be entered before changes can be made using the Keypad. Serial Security - Requires security access code to be entered before changes can be made using the RS232/422/485 link. Total Security - Requires security access code to be entered before changes can be made using the Keypad or serial link. Note: If security is set to Local, Serial or Total you can press PROG and scroll through the parameter settings but you are not allowed to change them unless you enter the correct access code.
	Access Timeout	The time in seconds the security access remains enabled after leaving the programming mode. If you exit and go back into the program Mode within this time limit, the security Access Code does not have to be re-entered. This timer starts when leaving the Program Mode (by pressing Display etc.).
	Access Code	A 4 digit code. You must know know this code to change secured Level 1 and Level 2 values. Note: Please record your access code and store it in a safe place. If you cannot gain entry into parameter values to change a protected parameter, please contact Baldor. Be prepared to give the 5 digit code located on the lower right side of the Keypad Display at the Enter Code prompt.
MOTOR DATA	Motor Voltage	The rated voltage of the motor (listed on the motor Nameplate). The value of this parameter has no effect on the output voltage to the motor.
	Motor Rated Amps	The rated current of the motor (listed on the motor Nameplate). If the motor current exceeds this value for a period of time, an Overcurrent fault will occur. If multiple motors are used on one control, add the Motor Rated Amps for all motors and enter this value.
	Motor Rated Speed	The rated speed of the motor (listed on the motor Nameplate). If Motor Rated SPD = 1750 RPM and Motor Rated Freq = 60 Hz, the Keypad Display will show 1750 RPM at 60 Hz and 850 RPM at 30Hz.
	Motor Rated Freq	The rated frequency of the motor (listed on the motor Nameplate).
	Motor Mag Amps	The motor magnetizing current value (listed on the motor Nameplate) also called no load current. If multiple motors are used on one control, add the Motor Mag Amps for all motors and enter this value.
BRAKE ADJUST	Resistor Ohms	The dynamic braking resistor value in ohms. Refer to MN701 (dynamic braking manual) or call Baldor for additional information. If dynamic braking is not installed, enter zero.
	Resistor Watts	The dynamic braking resistor watts rating. Refer to dynamic braking manual or call Baldor for additional information. If dynamic braking is not installed, enter zero.
	DC Brake Voltage	The amount of DC braking voltage applied to the motor windings during a stop command. Increase this value for more braking torque during stops. The increased braking voltage may cause the motor to overheat for applications that require frequent starts/stops. Be careful in selecting this value. The maximum DC Brake Voltage = (1.414)X(Max Output Volts). Max Output Volts is a Level 1 V/HZ and Boost parameter value.
	DC Brake FREQ	The output frequency (to the motor) at which dc injection braking will begin.
	Brake on Stop	If set to ON, DC injection braking will begin when a stop command is issued. After a stop command, the DC brake voltage will be applied to the motor windings when the output frequency reaches the DC brake frequency.
	Brake on Reverse	If set to ON, DC injection braking will begin after a change-motor-rotation command is issued. After a stop command, the DC brake voltage will be applied to the motor windings when the output frequency reaches the DC brake frequency. Braking continues until the motor is stopped. The motor will then accelerate in the opposite direction.
	Stop Brake Time	The maximum number of seconds that DC injection brake voltage will be applied to the motor windings after a stop command. After the time specified by this value, DC injection braking is automatically turned off. If DC injection braking starts at a frequency less than the DC brake frequency parameter, the stop brake time is calculated as follows: $\text{Brake Time} = \text{Stop Brake Time X} \frac{\text{Output Frequency at Braking}}{\text{DC Brake Frequency}}$
	Brake on Start	If set to ON, turns DC injection braking ON for a period of time (Start Brake Time) when a run command is issued. This ensures the motor is not rotating. Braking will automatically turn off and the motor will accelerate at the end of the start brake time.
	Start Brake Time	The amount of time that DC injection braking will be applied after a run command is issued. This will only occur if brake on start is set to ON. Braking may cause the motor to overheat for applications that require frequent starts/stops. Be careful in selecting this value. The start brake time should be just long enough to ensure the motor shaft is not rotating when a start command is issued.

Table 4-2 Parameter Block Definitions Level 2 Continued

Block Title	Parameter	Description
PROCESS CONTROL	Process Feedback	The type of signal used for the process feedback in the PID setpoint control loop.
	Process Inverse	OFF – The process feedback signal is not inverted (no polarity change). ON – Causes the process feedback signal to be inverted. Used with reverse acting processes that use a unipolar signal such as 4-20mA. If “ON”, the PID loop will see a low value of the process feedback signal as a high feedback signal and a high value of the process feedback signal as a low feedback signal.
	Setpoint Source	The source input reference signal type to which the process feedback will be compared. If “Setpoint CMD” is selected, a fixed value that is entered in the setpoint command parameter (of the Level 2 Process Control block) will be used.
	Setpoint Command	The setpoint value for the PID loop that the control will try to maintain. This is only used when the setpoint source parameter is set to “Setpoint Command”. Negative percentage values are ignored in the PID loop if the feedback signal contains only positive values (such as 0-10VDC).
	Set PT ADJ Limit	The maximum frequency correction value to be applied to the motor (in response to the maximum feedback setpoint error). For example, if the max output frequency is 60 Hz, the setpoint feedback error is 100% and the setpoint adjustment limit is 20%, the maximum speed the motor will run in response to the setpoint feedback error is ±12 Hz. (60Hz x 20%= 12Hz or a total of 24 Hz total output band-width centered around the effective setpoint frequency).
	At Setpoint Band	The operating band within which the at setpoint opto output is active (turned ON). This feature indicates when the process is within the desired setpoint range. For example, if the setpoint source is 0-10VDC and the at setpoint band value is 10%, the at setpoint opto output will turn on if the process is within (10 x 10% = 1) ±1VDC of the setpoint.
	Process PROP Gain	The PID loop proportional gain.
	Process INT Gain	The PID loop Integral gain.
	Process DIFF Gain	The PID loop differential gain.
	Follow I:O Ratio	The ratio of the master input to the follower output. Requires the master pulse reference/ isolated pulse follower expansion board. For example, the left number is the master input rate. The number to the right of the colon is the follower output rate. If you wish the follower to run twice the speed of the master, a 2:1 ratio is entered. Fractional ratios such as 0.5:1 are entered as 1:2.
	Follow I:O Out	Only used for serial communications. In master/follower configurations this parameter represents the follower portion of the ratio. The master portion of the ratio is set in the Follow I:O Ratio parameter. Note: When using Serial Commands, the Follow I:O Ratio parameter value must be set using two separate parameters: Follow I:O Ratio and Follow I:O Out. The follow I:O Ratio sets the Input (Master) part of the ratio and Follow I:O Out sets the output (Follower) part of the ratio. For example, a 2:1 (input:output) ratio is set by a Follow I:O Ratio value of 2 and a Follow I:O Out value of 1.
	Encoder Lines	Note: The encoder lines parameter must be defined if a value is entered in the Follow I:O Ratio parameter. Only used if an optional master pulse reference/isolated pulse follower expansion board is installed. Defines the number of pulses per revolution of the master encoder. This parameter defines the output master pulse rate for a downstream follower drive.

Table 4-2 Parameter Block Definitions Level 2 Continued

Block Title	Parameter	Description
SKIP FREQUENCY	Skip Frequency (#1, #2 and #3)	The center frequency of the frequency band to skip or treat as a dead-band. Three bands can be defined independently or the three values can be selected to skip one wide frequency band.
	Skip Band (#1, #2 and #3)	The width of the band centered about the Skip Frequency. For example, if Skip Frequency #1 is set to 20Hz and Skip Band #1 is set to 5Hz, continuous operation is not allowed in the dead-band of 15Hz to 25Hz.
SYNCHRO STARTS	Synchro Starts	Synchronizes motor and load speed when the motor shaft is rotating at the time the inverter applies power to the motor. If set to Restarts Only, allows Synchro Starts after a fault condition is reset. If set to All Starts, allows Synchro Starts at all fault resets as well as restarts after power failure or after a run command.
	Sync Start Frequency	Allows the Synchro Start feature to begin scanning motor rotational frequency at the MAX Frequency or a SET Frequency.
	Sync Scan V/F	Sets the Volts/Hertz ratio for the Synchro Start feature as a percentage of the V/Hz ratio defined by the Max Output Volts/Base Frequency. This Sync Scan V/F percentage value is multiplied by the Max Output Volts/Base Frequency value. If this value is too high, the inverter may fault on Over-current.
	Sync Setup Time	The time for the inverter to ramp the output voltage from zero to the voltage that corresponds to the Sync Start Frequency. A 0.5 second delay before the ramp begins is not included in this time. If the Synchro Start feature is not operating quickly enough, decrease the Sync Setup Time value.
	Sync Scan Time	The time allowed for Synchro Start to scan and detect rotor frequency. Scanning begins at the Sync Start Frequency to 0Hz. Generally, the shorter the Sync Scan Time the more likely a false Synchro Start will be detected. This value should be set high enough to eliminate false Synchro Starts.
	Sync V/F Recover	The time allowed to ramp up the output voltage from the Synchro Start scan voltage to the normal output voltage. This occurs after the synchronization frequency is detected. This parameter value should be low enough to minimize Synchro Start time without causing the inverter to fault on Over-current.
	Sync Direction	Allows Synchro Starts in either or both motor rotational directions. If the application requires motor shaft rotation in one direction only, scanning in that direction only will minimize Sync Scan Time.
COMMUNICATIONS	Protocol	Sets the type of communication the control is to use, RS-232 ASCII (text), RS-485 ASCII (text), RS-232 BBP, or RS-485 BBP protocols.
	Baud Rate	Sets the speed at which communication is to occur.
	Drive Address	Sets the address of the control for communication.
LEVEL 1 BLOCK		ENTERS LEVEL 1 MENU

Section 5
Troubleshooting

The Baldor Series 15H Control requires very little maintenance, if any, and should provide years of trouble free operation when installed and applied correctly. Occasional visual inspection and cleaning should be considered to ensure tight wiring connections and to remove dust, dirt, or foreign debris which can reduce heat dissipation.

Operational failures called “Faults” will be displayed on the keypad display as they occur. A comprehensive list of these faults, their meaning and how to access the fault log and diagnostic information is provided later in this section. Troubleshooting information is provided in table format with corrective actions later in this section.

Before attempting to service this equipment, all input power must be removed from the control to avoid the possibility of electrical shock. The servicing of this equipment should be handled by a qualified electrical service technician experienced in the area of high power electronics.

It is important to familiarize yourself with the following information before attempting any troubleshooting or service of the control. Most troubleshooting can be performed using only a digital voltmeter having at least 1 meg Ohm input impedance. In some cases, an oscilloscope with 5 MHZ minimum bandwidth may be useful. Before contacting Baldor, check that all power and control wiring is correct and installed according to the recommendations in this manual.

No Keypad Display - Display Contrast Adjustment

When AC power is applied to the control the keypad should display the status of the control. If there is no display visible, use the following procedure to adjust the display.

(Contrast may be adjusted in the display mode when motor is stopped or running).

Action	Description	Display	Comments
Apply Power	No visible display.		
Press DISP key	Places control in Display mode.		Display mode.
Press SHIFT key 2 times	Allows display contrast adjustment.		
Press ▲ or ▼ key	Adjusts display contrast (intensity).	ADJUST CONTRAST ⇕ [ENTER] TO SAVE	
Press ENTER key	Saves display contrast adjustment level and exits to display mode.	STOP FREQUENCY LOCAL 0.00 HZ	

How to Access Diagnostic Information

Action	Description	Display	Comments
Apply Power		BALDOR MOTORS & DRIVES	Logo display for 5 seconds.
	Display mode showing Local mode voltage, current & frequency status.	STP 0V 0 RPM LOC 0.0 A 0.0 HZ	No faults present. Local keypad mode. If in remote/serial mode, press local for this display.
Press DISP key	Scroll to fault log block.	PRESS ENTER FOR FAULT LOG	Press ENTER to view the fault log if desired.
Press DISP key	Scroll to diagnostic info block.	PRESS ENTER FOR DIAGNOSTIC INFO	Press ENTER to view diagnostic information if desired.
Press ENTER key	Access diagnostic information.	STOP FREQ REF LOCAL 2.00 HZ	.
Press DISP key	Display mode showing control temperature.	STOP CONTROL TEMP LOCAL 25.0° C	Displays operating temperature in degrees C.
Press DISP key	Display mode showing bus voltage.	STOP BUS VOLTAGE LOCAL 321V	
Press DISP key	Display mode showing bus Current.	STOP BUS CURRENT LOCAL 0.00A	
Press DISP key	Display mode showing PWM Frequency.	STOP PWM FREQ LOCAL 2497 HZ	
Press DISP key	Display mode showing % overload current remaining.	STOP OVRLD LEFT LOCAL 100.00%	
Press DISP key	Display mode showing real time opto inputs & outputs states. (0=Open, 1=Closed)	DIGITAL I/O 000000000 1110	Opto Inputs states (Left); Opto Outputs states (Right).
Press DISP key	Display mode showing actual drive running time since last power up.	TIME FROM PWR UP 0000000.01.43	HR.MIN.SEC format.
Press DISP key	Display operating zone with rated hp and input voltage (for the operating zone) and control type.	1 HP STD CT 230V INVERTER	
Press DISP key	Display mode showing continuous amps; PK amps rating; amps/volt scale of feedback, power base ID.	X.XA X.XAPK X.XXA/V ID:XXX	
Press DISP key	Display mode showing which Group1 or 2 expansion boards are installed.	I NOT INSTALLED II NOT INSTALLED	
Press DISP key	Display mode showing software version and revision installed in the control.	SOFTWARE VERSION XXX-X.XX	
Press DISP key	Displays exit choice. Press ENTER to exit.	PRESS ENTER FOR DIAGNOSTIC EXIT	Press ENTER to exit diagnostic information.

Initialize New Software EEPROM

After a new EEPROM is installed, the control will automatically initialize the new software version and memory locations as if “STD Settings” was selected. If you need to initialize the control to the 50Hz / 400Volts” settings, use the “Initialize New Software EEPROM” procedure shown in Section 4 of this manual.

How to Access the Fault Log When a fault condition occurs, motor operation stops and a fault code is displayed on the Keypad display. The control keeps a log of the last 31 faults. If more than 31 faults have occurred, the oldest fault will be deleted from the fault log. To access the fault log, perform the following procedure:

Action	Description	Display	Comments
Apply Power		BALDOR MOTORS & DRIVES	Logo display for 5 seconds.
	Display mode showing Local mode voltage, current & frequency status.	STP 0V 0 RPM LOC 0.0 A 0.0 HZ	No faults present. Local keypad mode. If in remote/serial mode, press local for this display.
Press DISP key	Press DISP to scroll to the Fault Log entry point.	PRESS ENTER FOR FAULT LOG	
Press ENTER key	Display first fault type and time fault occurred.	EXTERNAL TRIP 1: 0:00:30	Typical display.
Press ▲ key	Scroll through fault messages.	PRESS ENTER FOR FAULT LOG EXIT	If no messages, the fault log exit choice is displayed.
Press RESET key	Return to display mode.	STOP FREQUENCY LOCAL 0.00 HZ	Display mode stop key LED is on.

How to Clear the Fault Log Use the following procedure to clear the fault log.

Action	Description	Display	Comments
Apply Power		BALDOR MOTORS & DRIVES	Logo display for 5 seconds.
	Display mode showing output frequency.	STP 0V 0 RPM LOC 0.0 A 0.0 HZ	Display mode.
Press DISP key	Press DISP to scroll to the Fault Log entry point.	PRESS ENTER FOR FAULT LOG	
Press ENTER key	Displays most recent message.	EXTERNAL TRIP 1: 00000:00:30	
Press SHIFT key		EXTERNAL TRIP 1: 00000:00:30	
Press RESET key		EXTERNAL TRIP 1: 00000:00:30	
Press SHIFT key		EXTERNAL TRIP 1: 00000:00:30	
Press ENTER key	Fault log is cleared.	FAULT LOG NO FAULTS	No faults in fault log.
Press ▲ or ▼ key	Scroll Fault Log Exit.	PRESS ENTER FOR FAULT LOG EXIT	
Press ENTER key	Return to display mode.	PRESS ENTER FOR DIAGNOSTIC INFO	

Initialize New Software EEPROM

After a new EEPROM is installed, the control will automatically initialize the new software version and memory locations as if “STD Settings” was selected. If you need to initialize the control to the 50Hz / 400Volts” settings, use the “Initialize New Software EEPROM” procedure in section 4.

Table 5-1 Fault Messages

FAULT MESSAGE	DESCRIPTION
Invalid Base ID	Failure to determine control horsepower and input voltage configuration from the Power Base ID value in software.
NV Memory Fail	Failure to read or write to non-volatile memory.
Param Checksum	Parameter Checksum error detected.
Low INIT Bus V	Low bus voltage detected on startup.
HW Desaturation	High output current condition detected (greater than 400% of rated output current). On B2 size controls, a desat error can indicate any of the following: low line impedance, brake transistor failure or internal output transistor overtemperature.
HW Surge Current	High output current condition detected (greater than 250% of rated output current).
HW Ground Fault	Ground Fault detected (output current leakage to ground).
HW Power Supply	Control Board power supply failure detected.
Hardware Protect	A general hardware fault was detected but cannot be isolated.
1 MIN Overload	Peak output current exceeded the 1 minute rating value.
3 SEC Overload	Peak output current exceeded the 3 second rating value.
Overcurrent	Continuous current limit exceeded.
BUS Overvoltage	High DC Bus voltage.
Bus Undervoltage	Low DC Bus voltage condition detected.
Heat Sink Temp	Control heatsink exceeded upper temperature limit. For size B2 controls, this fault may indicate the main heatsink or the gate drive circuit board is too hot.
External Trip	Connection between J4-16 and J4-17 is open.
New Base ID	Control board detected a change in the Power Base ID value in software.
REGEN RES Power	Excessive power dissipation required by Dynamic Brake Hardware.
Line REGEN	Fault in Line REGEN converter unit - Series 21H Line REGEN Inverter control.
EXB Selection	Expansion board not installed to support the selected Level 1 Input Block, Command Select parameter.
Torque Proving	Unbalanced current in the three phase motor leads.
Unknown FLT Code	Microprocessor detected a fault that is not identified in the fault code table.
µP RESET	A software watchdog timer has reset the processor because a process has timed out.
FLT Log MEM Fail	Corrupt data in fault log (may occur on older systems only).
Current SENS FLT	Failure to sense phase current.
Bus Current SENS	Failure to sense bus current.

Power Base ID

Table 5-2 Power Base ID - Series 15H

230VAC Catalog No.	Power Base ID	460VAC Catalog No.	Power Base ID	575VAC Catalog No.	Power Base ID
201-E	823	401-E	A3B	501-E	E1A
201-W	823	401-W	A3B	501-W	E1A
202-E	824	402-E	A3C	502-E	EIB
202-W	824	402-W	A3C	502-W	EIB
203-E	825	403-E	A3D	503-E	E1C
203-W	825	403-W	A3D	503-W	E1C
205-E	826	405-E	A41	505-E	E1D
205-W	82A	405-W	A41	505-W	E1D
207-E	82D	407-E	A3E	507-E	E1E
207-W	82D	407-W	A3E	507-W	E1E
207L-E	801	407L-E	A01	510-E	E29
210-E	82E	410-E	A4A	510-W	E29
210-W	82E	410-W	A4A	515-E	E2A
210L-E	82B	410L-E	A3F	515-W	E2A
215-E	82F	415-E	A4B	515L	E0A
215-W	82F	415-W	A4B	520-E	E2B
210L-ER	80C	410L-ER	A08	520L	EOB
215V	808	415V	A0E	525-E	E2C
215L	80D	415L	A0F	525L	E0C
220-E	830	420-E	A4C	530	E13
220L	80E	420L	A20	530L	E0D
225	81D	425-E	A4D	540	E14
225V	809	425V	A0B	540L	E0E
225L	80F	425L	A21	550	E15
230	813 82C	430	A13	550L	E0F
230V	816	430V	A0C	560	E16
230L	817	430L	A22	575	E17
240	814	440	A14 A48	5100	E18
240L	818	440L	A23	5150	E1A
250	815	450	A15	5150V	E19
250V	80A	450L	A1C	5200	E2A
250L	81C	460	A16	5250	E3A
275		460V	A0A	5300	EA4
		460L	A24	5350	EA5
		475	A17	5400	EA6
		475L	A1D		
		4100	A18		
		4100L	A2F		
		4125L	A30		
		4150	A9A		
		4150V	A19		
		4200	A9B		
		4250	AA5		
		4300	AAE		
		4350	AA6		
		4400	AA7		
		4450	AA9		
		4500	AC4		
		4600	AC5		
		4700	AC6		
		4800	AC7		

Table 5-3 Troubleshooting

INDICATION	POSSIBLE CAUSE	CORRECTIVE ACTION
Command Select	Incorrect operating mode programmed.	Change Operating Mode in the Level 1 Input block to one that does not require the expansion board.
	Need expansion board.	Install the correct expansion board for selected operating mode.
Bus Overvoltage Trip or HW Overvoltage	Excessive dynamic braking power.	Check dynamic brake watt and resistance parameter values. Increase the DECEL time. Add external dynamic braking assemblies: RGA resistor kit or RBA transistor assembly.
	DECEL Rate set too low a value	Lengthen DECEL time. Add external dynamic braking resistors or module.
	Overhauling Motor load	Correct problem with motor load. Add external dynamic braking resistors or module.
	Dynamic brake mis-wired.	Check dynamic brake hardware wiring.
	Input voltage too high.	Verify proper AC line voltage. Use step down transformer if needed. Use line reactor to minimize spikes.
Bus Undervoltage	Input voltage too low.	Verify proper AC line voltage. Use step up transformer if needed. Check power line disturbances (sags caused by start up of other equipment). Monitor power line fluctuations with date and time imprint to isolate power problem. Disconnect dynamic brake hardware and repeat operation.
External Trip	Motor ventilation insufficient.	Clean motor air intake and exhaust. Check external blower for operation. Verify motor's internal fan is coupled securely.
	Motor draws excessive current.	Check motor for overloading. Verify proper sizing of control and motor.
	Volts/Hertz ratio is wrong.	Adjust the Volts/Hz parameter value. Adjust the Base Frequency. Adjust the Max Output Voltage.
	No thermostat connected.	Connect thermostat. Verify connection of all external trip circuits used with thermostat. Disable thermostat input at control.
	Poor thermostat connections.	Check thermostat connections.
	External trip parameter incorrect.	Verify connection of external trip circuit at J4-16. Set external trip parameter to "OFF" if no connection made at J4-16.
Hardware Protect	Fault duration too short to be identified.	Reset control. Check for proper grounding of power wiring and shielding of signal wiring. Replace control board.
Heatsink Temp	Motor Overloaded.	Correct motor loading. Verify proper sizing of control and motor.
	Ambient temperature too high.	Relocate control to cooler operating area. Add cooling fans or air conditioner to control cabinet.
	Built-in fans are ineffective or inoperative.	Verify fan operation. Remove debris from fan and heatsink surfaces. Replace fan or check fan wiring.

Table 5-3 Troubleshooting Continued

INDICATION	POSSIBLE CAUSE	CORRECTIVE ACTION
HW Desaturation	Accel/Decel rate set too short. Torque Boost set too high. Electrical noise in logic circuits. Motor overloaded.	Lengthen Accel/Decel rate. Reduce torque boost value. Check for proper grounding of power wiring and shielding of signal wiring. Verify proper sizing of control and motor or reduce motor load.
HW Power Supply	Power supply malfunctioned.	Check internal connections. Replace logic power board.
HW Ground Fault	Output current (motor current) leakage to ground.	Disconnect wiring between control and motor. Retry test. If GND FLT is cleared, reconnect motor leads and retry the test. Repair motor if internally shorted. Replace motor lead wire with low capacitance cable. If GND FLT remains, contact Baldor.
Invalid Base ID	Control does not recognize hp and Voltage configuration.	Press “RESET” key on keypad. If fault remains access ”Diagnostic Info” and compare reported ID number with Table 5-2. If different, call Baldor.
Line REGEN	Fault in Line REGEN Converter	Series 21H Line REGEN Inverter only.
Motor Will Not Start	Not enough starting torque.	Increase Current Limit setting.
	Motor overloaded.	Check for proper motor loading. Check couplings for binding. Verify proper sizing of control and motor.
	Motor may be commanded to run below minimum frequency setting.	Increase speed command or lower minimum frequency setting.
	Incorrect Command Select parameter.	Change Command Select parameter to match wiring at J4.
	Incorrect frequency command.	Verify control is receiving proper command signal at J4.
Motor Will Not Reach Maximum Speed	Max Frequency Limit set too low.	Adjust Max Frequency Limit parameter value.
	Motor overloaded.	Check for mechanical overload. If unloaded motor shaft does not rotate freely, check motor bearings.
	Improper speed command.	Verify control is receiving proper command signal at input terminals. Verify control is set to proper operating mode to receive your speed command.
	Speed potentiometer failure.	Replace potentiometer.
Motor Will Not Stop Rotation	MIN Output Speed parameter set too high.	Adjust MIN Output Speed parameter value.
	Improper speed command.	Verify control is receiving proper command signal at input terminals. Verify control is set to receive your speed command.
	Speed potentiometer failure.	Replace potentiometer.
Motor runs rough at low speed	Torque boost set too high.	Adjust torque boost parameter value.
	Misalignment of coupling.	Check motor/load coupling alignment.
	Faulty motor.	Replace with a Baldor Motor.

Table 5-3 Troubleshooting Continued

INDICATION	POSSIBLE CAUSE	CORRECTIVE ACTION
New Base ID	Replaced Control or circuit board.	Restore parameters to factory settings. Reset control.
No Display	Lack of input voltage.	Check input power for proper voltage.
	Loose connections.	Check input power termination. Verify connection of operator keypad.
	Adjust display contrast.	See Adjust Display Contrast.
NV Memory Fail	Memory fault occurred.	Press “RESET” key on keypad. Restore parameter values to factory settings. If fault remains, call Baldor.
3 Sec Overload	Peak output current exceeded 3 sec rating.	Check PK Current Limit parameter in the Level 2 Output Limits block. Check motor for overloading. Increase ACCEL time. Reduce motor load. Verify proper sizing of control and motor.
1 Min Overload	Peak output current exceeded 1 minute rating.	Check PK Current Limit parameter in the Level 2 Output Limits block. Check motor for overloading. Increase ACCEL/DECEL times. Reduce motor load. Verify proper sizing of control and motor.
Over Speed	Motor exceeded 110% of MAX Speed parameter value.	Check Max Output Speed in the Level 2 Output Limits block. Increase Speed PROP Gain in the Level 1 block.
Param Checksum	Memory fault occurred.	Press “RESET” key on keypad. Restore parameter values to factory settings. If fault remains, call Baldor.
Regen RES Power	Incorrect dynamic brake parameter.	Check Resistor Ohms and Resistor Watts parameters in the Level 2 Brake Adjust block.
	Regen power exceeded dynamic brake resistor rating.	Add external dynamic braking assemblies: RGA resistor kit or RBA transistor assembly. Increase Decel Time.
Unknown Fault Code	Microprocessor detected a fault that is not defined in the fault code table.	Press “RESET” key on keypad. Restore parameter values to factory settings. If fault remains, call Baldor.
Unstable Speed	Oscillating load. Unstable input power. Slip compensation too high.	Correct motor load. Correct input power. Adjust slip compensation.
uP Reset	A software watchdog timer has reset the processor because a process has timed out.	Press “RESET” key on keypad. If fault remains, call Baldor.
FLT Log MEM Fail	Corrupt data in fault log (may occur on older systems only).	Press “RESET” key on keypad. If fault remains, call Baldor.
Current SENS FLT	Failure to sense phase current.	Press “RESET” key on keypad. If fault remains, call Baldor.
Bus Current SENS	Failure to sense bus current.	Press “RESET” key on keypad. If fault remains, call Baldor.

Electrical Noise Considerations

All electronic devices are vulnerable to significant electronic interference signals (commonly called “Electrical Noise”). At the lowest level, noise can cause intermittent operating errors or faults. From a circuit standpoint, 5 or 10 millivolts of noise may cause detrimental operation. For example, analog speed and torque inputs are often scaled at 5 to 10VDC maximum with a typical resolution of one part in 1,000. Thus, noise of only 5 mV represents a substantial error.

At the extreme level, significant noise can cause damage to the drive. Therefore, it is advisable to prevent noise generation and to follow wiring practices that prevent noise generated by other devices from reaching sensitive circuits. In a control, such circuits include inputs for speed, torque, control logic, and speed and position feedback, plus outputs to some indicators and computers.

Relay and Contactor Coils

Among the most common sources of noise are the coils of contactors and relays. When these highly inductive coil circuits are opened, transient conditions often generate spikes of several hundred volts in the control circuit. These spikes can induce several volts of noise in an adjacent wire that runs parallel to a control-circuit wire. Figure 5-1 illustrates noise suppression for AC and DC relay coils.

Figure 5-1 AC and DC Coil Noise Suppression

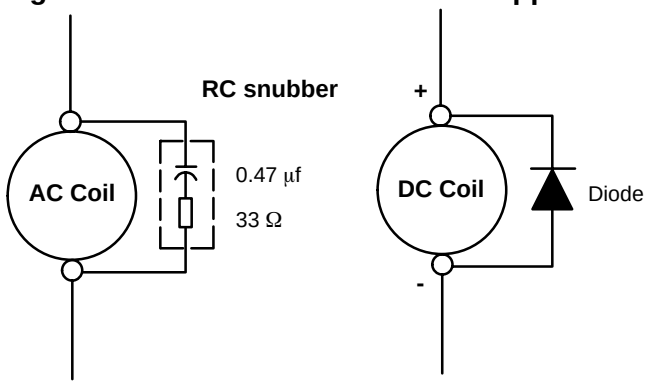

Wires between Controls and Motors

Output leads from a typical 460VAC drive controller contain rapid voltage rises created by power semiconductors switching 650V in less than a microsecond, 1,000 to 10,000 times a second. These noise signals can couple into sensitive drive circuits. If shielded pair cable is used, the coupling is reduced by nearly 90%, compared to unshielded cable.

Even input AC power lines contain noise and can induce noise in adjacent wires. In some cases, line reactors may be required.

To prevent induced transient noise in signal wires, all motor leads and AC power lines should be contained in rigid metal conduit, or flexible conduit. Do not place line conductors and load conductors in same conduit. Use one conduit for 3 phase input wires and another conduit for the motor leads. The conduits should be grounded to form a shield to contain the electrical noise within the conduit path. Signal wires - even ones in shielded cable should never be placed in the conduit with motor power wires.

Special Drive Situations

For severe noise situations, it may be necessary to reduce transient voltages in the wires to the motor by adding load reactors. Load reactors are installed between the control and motor.

Reactors are typically 3% reactance and are designed for the frequencies encountered in PWM drives. For maximum benefit, the reactors should be mounted in the drive enclosure with short leads between the control and the reactors.

Control Enclosures

Motor controls mounted in a grounded enclosure should also be connected to earth ground with a separate conductor to ensure best ground connection. Often grounding the control to the grounded metallic enclosure is not sufficient. Usually painted surfaces and seals prevent solid metallic contact between the control and the panel enclosure. Likewise, conduit should never be used as a ground conductor for motor power wires or signal conductors.

Special Motor Considerations

Motor frames must also be grounded. As with control enclosures, motors must be grounded directly to the control and plant ground with as short a ground wire as possible. Capacitive coupling within the motor windings produces transient voltages between the motor frame and ground. The severity of these voltages increases with the length of the ground wire. Installations with the motor and control mounted on a common frame, and with heavy ground wires less than 10 ft. long, rarely have a problem caused by these motor–generated transient voltages.

Analog Signal Wires

Analog signals generally originate from speed and torque controls, plus DC tachometers and process controllers. Reliability is often improved by the following noise reduction techniques:

- Use twisted-pair shielded wires with the shield grounded at the drive end only.
- Route analog signal wires away from power or control wires (all other wiring types).
- Cross power and control wires at right angles (90°) to minimize inductive noise coupling.

Section 6
Specifications and Product Data

Specifications:

Horsepower	1-50 HP @ 230VAC 1-800 HP @ 460VAC 1-600 HP @ 575VAC
Input Frequency	50/60Hz ± 5%
Output Voltage	0 to Maximum Input VAC
Output Current	See Ratings Table
Output Frequency	0 to 120Hz or 0 to 400Hz (jumper selectable)–
Service Factor	1.0
Duty	Continuous
Overload Capacity	Variable Torque Mode: 115% for 60 secs
Frequency Setting	Keypad, 0-5VDC, 0-10VDC, 4-20mA
Frequency Setting Potentiometer	5kΩ or 10kΩ, 1/2 Watt
Rated Storage Temperature:	– 30°C to +65°C
Power Loss Ridethrough	15ms minimum at full load, 200 ms at idle
Power Factor (Displacement)	0.95% minimum
Efficiency	95% minimum at full load and speed

Operating Conditions:

Voltage Range:	230 VAC Models	180-264 VAC 3ϕ 60Hz/180-230 VAC 3ϕ 50Hz
	460 VAC Models	340-528 VAC 3ϕ 60Hz/340-457 VAC 3ϕ 50Hz
	575 VAC Models	495-660 VAC 3ϕ 60Hz
Input Line Impedance:		3% Minimum Required (all except C2 Size) 1% for C2 Size
Ambient Operating Temperature:		0 to +40°C Derate Output 2% per °C over 40°C to 55°C (130°F) Maximum
Enclosure:		NEMA 1: E, EO and ER (suffix) Models NEMA 4X Indoor: W (suffix) Models Protected Chassis MO and MR (suffix) Models
Humidity:		NEMA 1 & protected: To 90% RH non-condensing NEMA 4X Indoor: To 100% RH condensing
Altitude:		Sea level to 3300 feet (1000 meters) Derate 2% per 1000 feet (303 meters) above 3300 feet
Shock:		1G
Vibration:		0.5G at 10Hz to 60Hz

Keypad Display:

Display	Backlit LCD Alphanumeric 2 Lines x 16 Characters
Keys	Membrane keypad with tactile response
Functions	Output status monitoring Digital speed control Parameter setting and display Fault log display Motor run and jog Local/Remote
LED Indicators	Forward run command Reverse run command Stop command Jog active
Remote Mount	100 feet Maximum from control

Control Specifications:

Control Method	Sinewave Carrier input, PWM output
Frequency Accuracy	0.01Hz Digital 0.05 % Analog
Frequency Resolution	0.01Hz Digital 0.5% Analog
Carrier Frequency	1kHz to15kHz adjustable 2.5kHz Standard 8.0kHz Quiet
Transistor Type	IGBT (Insulated Gate Bipolar Transistor)
Transistor Rise Time	2500 V/μsec. (dv/dt)
Torque Boost	Automatic adjustment to load (Standard) 0 to 15% of input voltage (Manual)
Volts/Hertz Pattern	Linear, Squared Reduced, Three Point
Accel/Decel Time	0 to 3600 sec. for 2 assignable plus JOG
S-Curve Time	0 to 100%
Base Frequency	10 to 400Hz
Regenerative Braking Torque	20% Minimum (–E, –W) 100% with optional external braking resistor (–EO, –MO, –ER)
Jog Frequency	0 to Maximum frequency
Skip Frequency	0 to Maximum frequency in 3 zones.
Minimum Output Frequency	0 to Maximum frequency
Maximum Output Frequency	0 to Maximum frequency
Auto Restart	Manual or Automatic
Slip Compensation	0 to 6Hz
Operating modes	Keypad Standard Run 15 Speed 2 Wire Fan Pump 2 Wire Fan Pump 3 Wire Serial Process Control 3 Speed Analog 2 Wire 3 Speed Analog 3 Wire Electronic Pot – 2 Wire Electronic Pot 3 Wire

Analog Inputs: (2 Inputs)

Potentiometer Input	0 - 10VDC
Differential Input Full Scale Range	0-5VDC, 0-10VDC, 4-20mA
Differential Input Common Mode Rejection	40db
Input Impedance	20kΩ

Analog Outputs: (2 Outputs)

Analog Outputs	2 Assignable
Full Scale Range	0 to 5 VDC Nominal (0 to 8VDC Maximum)
Source Current	1 mA maximum
Resolution	8 bits
Output Conditions	7 conditions plus calibration (see parameter table)

Digital Inputs: (9 Inputs)

Opto-isolated Logic Inputs	9 Assignable
Rated Voltage	10 - 30VDC
Input Impedance (Opto-Isolated Logic Inputs)	6.8kΩ (Closed contacts standard)
Leakage Current (Opto-Isolated inputs OFF)	10μA Maximum

Digital Outputs:
(2 Opto Isolated Outputs)

Rated Voltage	5 to 30VDC
Maximum Current	60 mA Maximum
ON Voltage Drop	2 VDC Maximum
OFF Leakage Current	0.1 μA Maximum
Output Conditions	10 Conditions (see parameter table)

(2 Relay Outputs)

Rated Voltage	5 to 30VDC or 230VAC
Maximum Current	5 A Maximum
Output Conditions	10 Conditions (see parameter table)

Diagnostic Indications:

Invalid Base ID
NV Memory Fail
Param Checksum
New Base ID
HW Desaturation
HW Surge Current
HW Ground Fault
HW Power Supply
Hardware Protect
1 Min Overload
3 Sec Overload
Bus Overvoltage
Bus Undervoltage
Heat Sink Temp
External Trip
REGEN Res Power
Low INIT Bus V
Overcurrent
EXB Selection
Torque Proving
μP Reset
FLT Log MEM Fail
Current SENS FLT
Bus Current SENS

Note: All specifications are subject to change without notice.

Ratings Series 15V Stock Products

CATALOG Number	INPUT VOLT	SIZE	STANDARD 2.5 kHz PWM VARIABLE TORQUE					QUIET 8.0 kHz PWM VARIABLE TORQUE				
			Input Amp	Output				Input Amp	Output			
				HP	KW	IC	IP		HP	KW	IC	IP
ID15V202–EO, –WO	230	A	7.2	2	1.5	7	8	4.1	1	0.75	4	5
ID15V203–EO, –WO	230	A	10.3	3	2.2	10	12	7.2	2	1.5	7	8
ID15V205–EO, –WO	230	A	16.5	5	3.7	16	19	10.3	3	2.2	10	12
ID15V207–EO, –WO	230	A	22.7	7.5	5.5	22	25	16.5	5	3.7	16	19
ID15V210–EO, –WO	230	B2	28.8	10	7.4	28	32	22.7	7.5	5.5	22	25
ID15V215–EO –WO	230	B2	43.2	15	11.1	42	48	28.8	10	7.4	28	32
ID15V220–EO	230	B2	57	20	11.1	54	62	43.3	15	11.1	42	48
ID15V220V–EO –WO	230	B2	57	20	18.6	54	62	56	20	14.9	54	62
ID15V230–EO	230	C2	82	30	22.3	80	92	70	25	18.6	68	78
ID15V230–EO	230	C2	82	30	22.4	80	92	70	25	18.6	68	78
ID15V250–MO	230	D	134	50	37	130	150	107	40	30	104	120
ID15V250V–MO	230	D	134	50	37	130	150	134	50	37	130	150
ID15V250V–MO	230	D	134	50	37	130	150	134	50	37	130	150
ID15V402–EO, –WO	460	A	4.1	2	1.5	4.0	5.0	2.1	1	0.75	2.0	3.0
ID15V403–EO, –WO	460	A	5.2	3	2.2	5.0	6.0	4.1	2	1.5	4.0	5.0
ID15V405–EO, –WO	460	A	8.2	5	3.7	8.0	10	5.2	3	2.2	5.0	6.0
ID15V407–EO, –WO	460	A	11.3	7.5	5.6	11	13	8.2	5	3.7	8.0	10
ID15V410–EO, –WO	460	A	14.4	10	7.5	14	17	11.3	7.5	5.6	11	13
ID15V415–EO, –WO	460	B2	21.6	15	11.2	21	24	14.4	10	7.5	14	16
ID15V420–EO, –WO	460	B2	27.8	20	14.9	27	31	21.6	15	11.2	21	24
ID15V425–EO,	460	B2	35	25	18.7	34	39	28	20	14.9	27	31
ID15V425V–EO	460	B2	35	25	22.4	34	39	35	25	18.7	34	39
ID15V440–EO	460	C2	54	40	29.9	52	60	41	30	22.4	40	46
ID15V440–EO	460	C2	54	40	29.9	52	60	41	30	22.4	40	46
ID15V460–EO	460	D	82	60	45	80	92	67	50	37	65	75
ID15V475–EO	460	D	103	75	56	100	115	82	60	45	80	92
ID15V4100–EO	460	E	129	100	75	125	144	103	75	56	100	115
ID15V4125–EO	460	E	165	125	93	160	184	129	100	75	125	144
ID15V4150–EO	460	E	185	150	112	180	207	165	125	93	160	184
ID15V4200–EO	460	F	247	200	149	240	276	175	150	112	170	200
ID15V4250–EO	460	F	319	250	187	310	360	216	175	130	210	240
ID15V4300–EO	460	F	381	300	224	370	430	319	250	186	310	360
ID15V4350–EO	460	G	432	350	261	420	490					
ID15V4400–EO	460	G	494	400	298	480	560					
ID15V4450–EO	460	G	556	450	336	540	620					
ID15V4500–EO	460	G	607	500	373	590	680					
ID15V4600–EO	460	G+	731	600	447	710	820					
ID15V4700–EO	460	G+	855	700	522	830	960					
ID15V4800–EO	460	G+	979	800	597	950	1100					
ID15V4900–EO	460	G+	1102	900	671	1070	1230					
ID15V502–EO	575	A	3.1	2.0	1.5	3.0	4.0	1.6	1	0.75	1.5	1.7
ID15V503–EO	575	A	4.1	3	2.2	4.0	5.0	3.1	2	1.5	3.0	4.0
ID15V505–EO	575	A	7.2	5	3.7	7.0	8.0	4.1	3	2.2	4.0	5.0
ID15V507–EO	575	A	9.3	7.5	5.6	9.0	11	7.2	5	3.7	7.0	8.0
ID15V510–EO	575	A	11.3	10	7.5	11	13	9.3	7.5	5.6	9	11
ID15V515–EO, –WO	575	B2	17.5	15	11.2	17	20	11.3	10	7.5	11	13
ID15V520–EO, –WO	575	B2	22.7	20	14.9	22	25	17.5	15	11.2	17	20
ID15V525–EO, –WO	575	B2	28	25	19	27	31	23	20	15	22	25
ID15V525V–EO –WO	575	B2	28	25	22	27	31	28	25	19	27	31
ID15V540–EO	575	C2	44	40	30	41	47	33	30	22	32	37
ID15V550–EO	575	D	56	50	37.2	52	60	44	40	29.8	41	47
ID15V560–EO	575	D	67	60	45	62	71	56	50	37	52	60
ID15V5100–EO	575	E	102	100	75	100	115					
ID15V5125–EO	575	E	129	125	93	125	145					
ID15V5150–EO	575	E	148	150	112	145	166					
ID15V5200–EO	575	F	206	200	149	200	230					
ID15V5250–EO	575	F	258	250	186	250	290					
ID15V5350–EO	575	G	350	350	261	340	400					
ID15V5400–EO	575	G	402	400	298	390	450					
ID15V5450–EO	575	G	453	450	336	440	510					

Custom Unit Rating

Terminal Tightening Torque Specifications

Table 6-4 Series 15V Stock Products

Catalog No.	Tightening Torque									
	Power TB1		Ground		Control J1		B+/R1; B+; B–; or R2		D1/D2	
	Lb-in	Nm	Lb-in	Nm	Lb-in	Nm	Lb-in	Nm	Lb-in	Nm
230VAC										
ID15V202 –EO, –WO	8	0.9	15	1.7	4.5	0.5	8	0.9	–	–
ID15V203 –EO, –WO	8	0.9	15	1.7	4.5	0.5	8	0.9	–	–
ID15V205 –EO, –WO	8	0.9	15	1.7	4.5	0.5	8	0.9	–	–
ID15V207 –EO, –WO	8	0.9	15	1.7	4.5	0.5	8	0.9	–	–
ID15V210 –EO, –WO	20	2.5	15	1.7	4.5	0.5	20	2.5	–	–
ID15V215 –EO, –WO	20	2.5	15	1.7	4.5	0.5	20	2.5	–	–
ID15V220 –EO, –WO	20	2.5	15	1.7	4.5	0.5	20	2.5	–	–
ID15V220V –EO, –WO	20	2.5	15	1.7	4.5	0.5	20	2.5	–	–
ID15V230–EO	50	5.6	50	5.6	4.5	0.5	50	5.6	32	3.6
ID15V225–ER	22–26	2.5–3	22–26	2.5–3	4.5	0.5	22–26	2.5–3	–	–
ID15V225L–ER	35	4	22–26	2.5–3	4.5	0.5	35	4	–	–
ID15V230–EO	50	5.6	50	5.6	4.5	0.5	50	5.6	32	3.6
ID15V250 –MO	140	15.8	50	5.6	4.5	0.5	140	15.8	3.5	0.4
ID15V250V–MO	140	15.8	50	5.6	4.5	0.5	140	15.8	3.5	0.4
460VAC										
ID15V402 –EO, –WO	8	0.9	15	1.7	4.5	0.5	8	0.9	–	–
ID15V403 –EO, –WO	8	0.9	15	1.7	4.5	0.5	8	0.9	–	–
ID15V405 –EO, –WO	8	0.9	15	1.7	4.5	0.5	8	0.9	–	–
ID15V407 –EO, –WO	8	0.9	15	1.7	4.5	0.5	8	0.9	–	–
ID15V410 –EO, –WO	20	2.5	20	2.5	4.5	0.5	20	2.5	–	–
ID15V415 –EO, –WO	20	2.5	20	2.5	4.5	0.5	20	2.5	–	–
ID15V420 –EO, –WO	35	4	50	5.6	4.5	0.5	35	4	–	–
ID15V425 –EO	35	4	50	5.6	4.5	0.5	35	4	–	–
ID15V425V –EO	35	4	50	5.6	4.5	0.5	35	4	–	–
ID15V440–EO	50	5.6	50	5.6	4.5	0.5	50	5.6	32	3.6
ID15V460–EO	22–26	2.5–3	22–26	2.5–3	4.5	0.5	22–26	2.5–3	3.5	0.4
ID15V475–EO	22–26	2.5–3	22–26	2.5–3	4.5	0.5	22–26	2.5–3	3.5	0.4
ID15V4100–EO	140	15.8	50	5.6	4.5	0.5	140	15.8	3.5	0.4
ID15V4125–EO	75	8.5	50	5.6	4.5	0.5	75	8.5	3.5	0.4
ID15V4150–EO	75	8.5	50	5.6	4.5	0.5	75	8.5	3.5	0.4
ID15V4200–EO	275	31	50	5.6	4.5	0.5	275	31	3.5	0.4
ID15V4250–EO	275	31	50	5.6	4.5	0.5	275	31	3.5	0.4
ID15V4300–EO	375	42	375	42	4.5	0.5	375	42	3.5	0.4
ID15V4350–EO	375	42	375	42	4.5	0.5	375	42	3.5	0.4
ID15V4400–EO	375	42	375	42	4.5	0.5	375	42	3.5	0.4
ID15V4450–EO	375	42	375	42	4.5	0.5	375	42	3.5	0.4
ID15V4500–EO	375	42	375	42	4.5	0.5	375	42	3.5	0.4
ID15V4600–EO	375	42	375	42	4.5	0.5	375	42	3.5	0.4
ID15V4700–EO	375	42	375	42	4.5	0.5	375	42	3.5	0.4
ID15V4800–EO	375	42	375	42	4.5	0.5	375	42	3.5	0.4
ID15V4900–EO	375	42	375	42	4.5	0.5	375	42	3.5	0.4

Table 6-4 Series 15V Stock Products Continued

Catalog No.	Tightening Torque									
	Power TB1		Ground		Control J1		B+/R1; B+; B–; or R2		D1/D2	
	Lb-in	Nm	Lb-in	Nm	Lb-in	Nm	Lb-in	Nm	Lb-in	Nm
575VAC										
ID15V502–EO	8	0.9	15	1.7	4.5	0.5	8	0.9	–	–
ID15V503–EO	8	0.9	15	1.7	4.5	0.5	8	0.9	–	–
ID15V505–EO	8	0.9	15	1.7	4.5	0.5	8	0.9	–	–
ID15V507–EO	8	0.9	15	1.7	4.5	0.5	8	0.9	–	–
ID15V510–EO	20	2.5	20	2.5	4.5	0.5	20	2.5	–	–
ID15V515–EO,–WO	20	2.5	20	2.5	4.5	0.5	20	2.5	–	–
ID15V520–EO,–WO	20	2.5	20	2.5	4.5	0.5	20	2.5	–	–
ID15V525–EO,–WO	35	4	20	2.5	4.5	0.5	35	4	3.5	0.4
ID15V540–EO	35	4	50	5.6	4.5	0.5	35	4	3.5	0.4
ID15V550–EO	35	4	50	5.6	4.5	0.5	35	4	3.5	0.4
ID15V560–EO	35	4	50	5.6	4.5	0.5	35	4	3.5	0.4
ID15V5100–EO	20 - 30	2.5 - 3.5	50	5.6	4.5	0.5	20 - 30	2.5 - 3.5	3.5	0.4
ID15V5125–EO	20 - 30	2.5 - 3.5	50	5.6	4.5	0.5	20 - 30	2.5 - 3.5	3.5	0.4
ID15V5150–EO	35 - 50	4 - 5.7	50	5.6	4.5	0.5	35 - 50	4 - 5.7	3.5	0.4

Mounting Dimensions

Size A Control

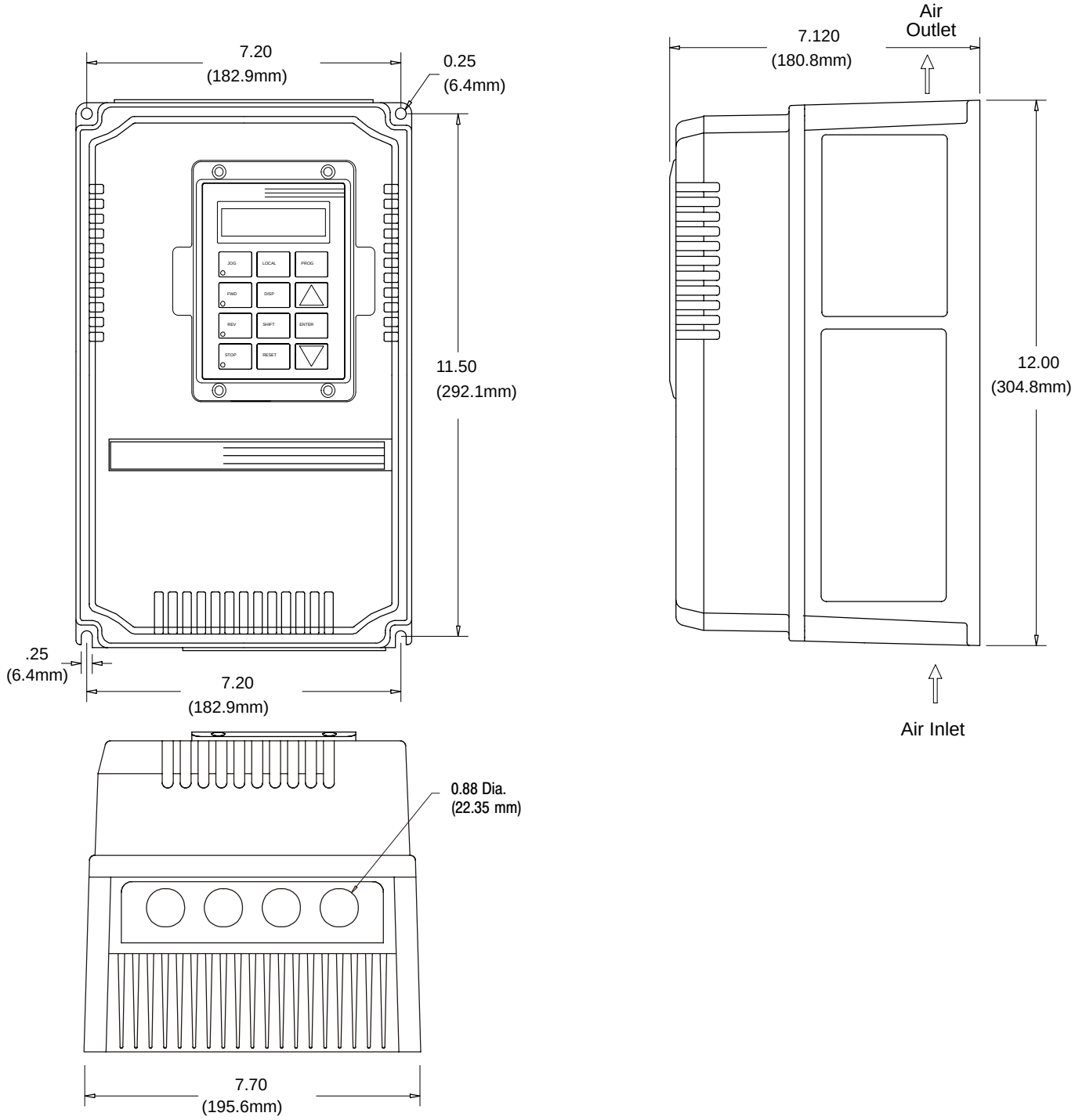

Dimensions Continued

Size A Control – Through–Wall Mounting

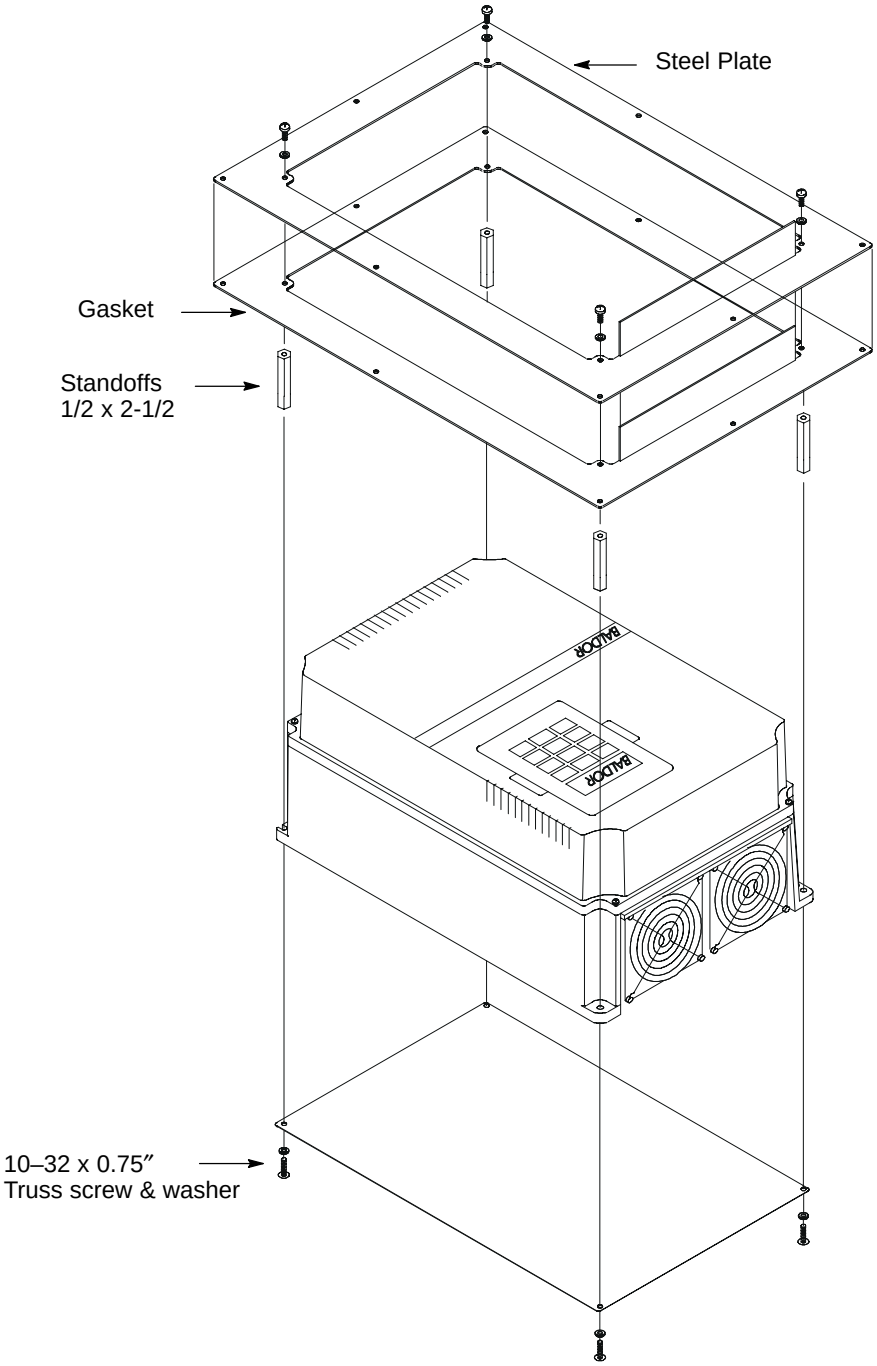

Dimensions Continued

Size B2 Control

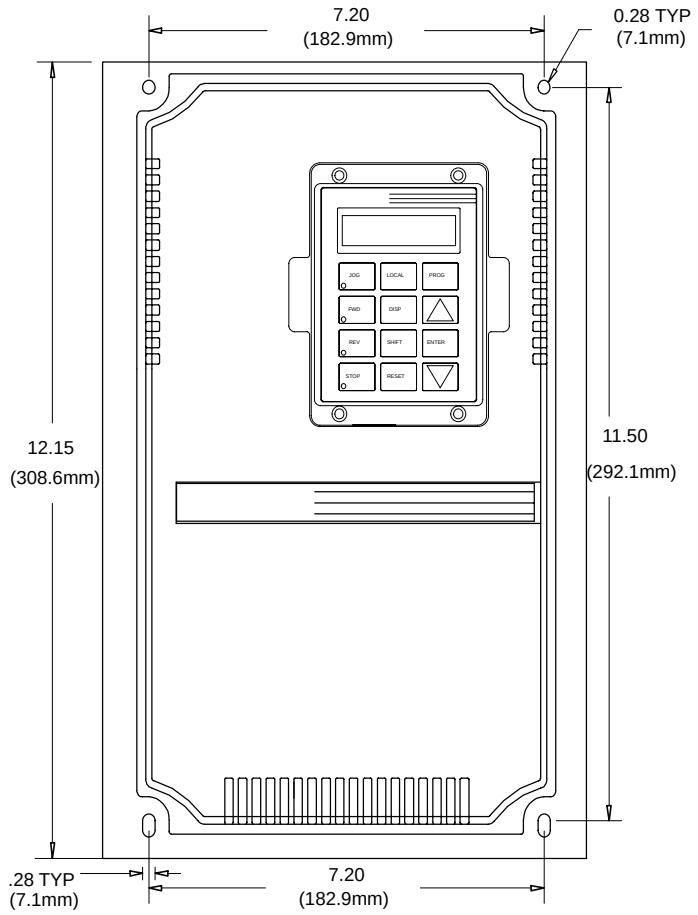

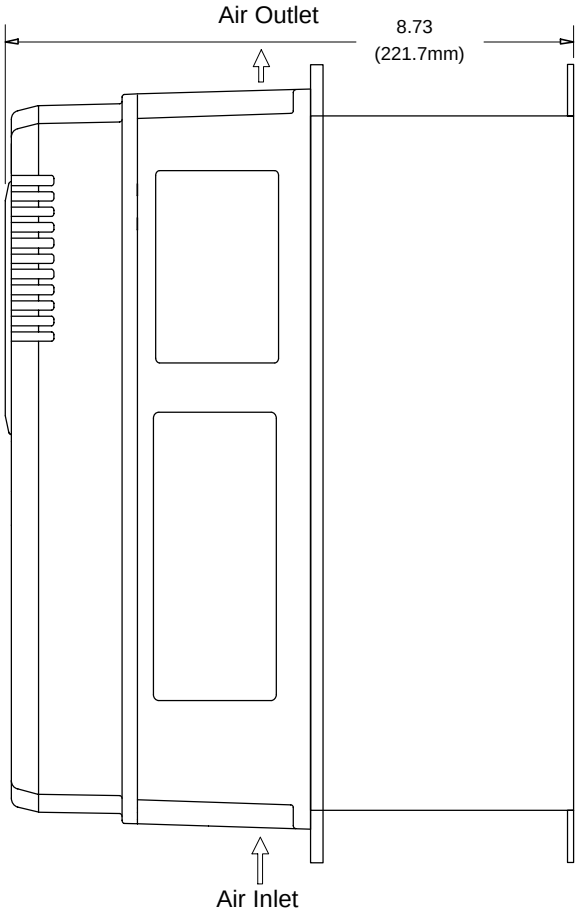

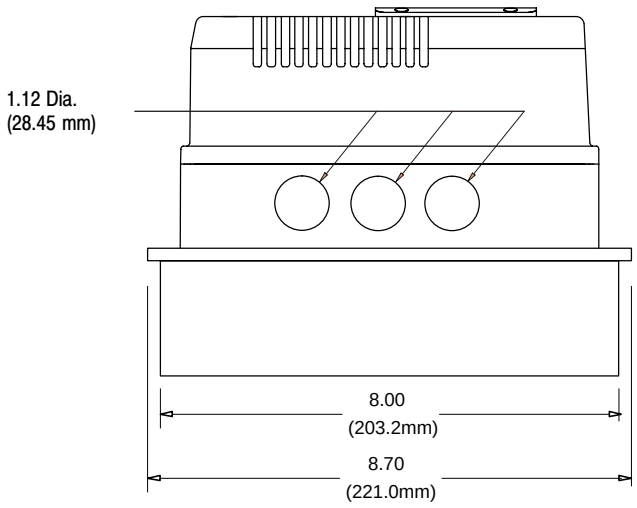

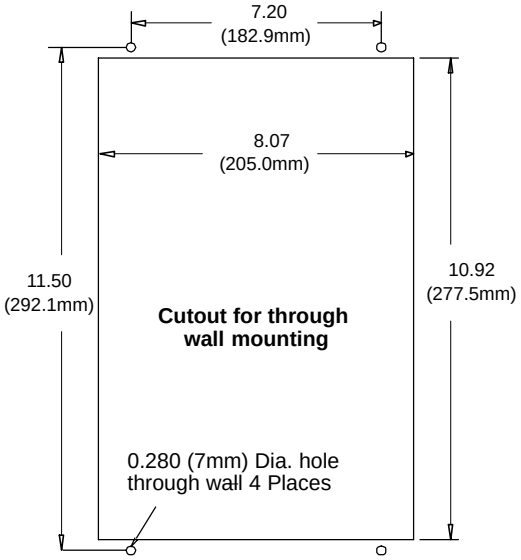

Dimensions Continued

Size C2 Control

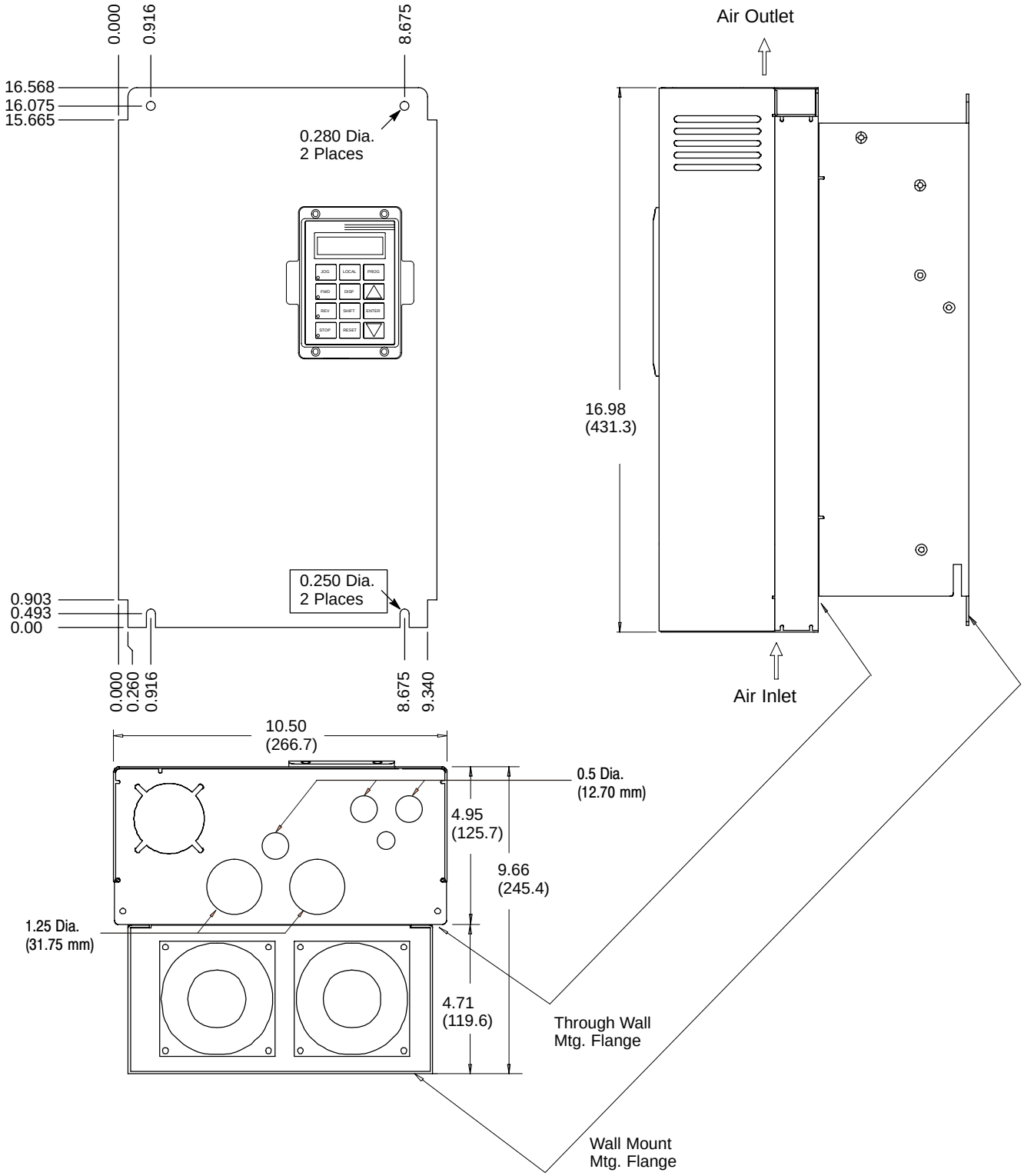

Dimensions Continued

Size C2 Control – Through–Wall Mounting

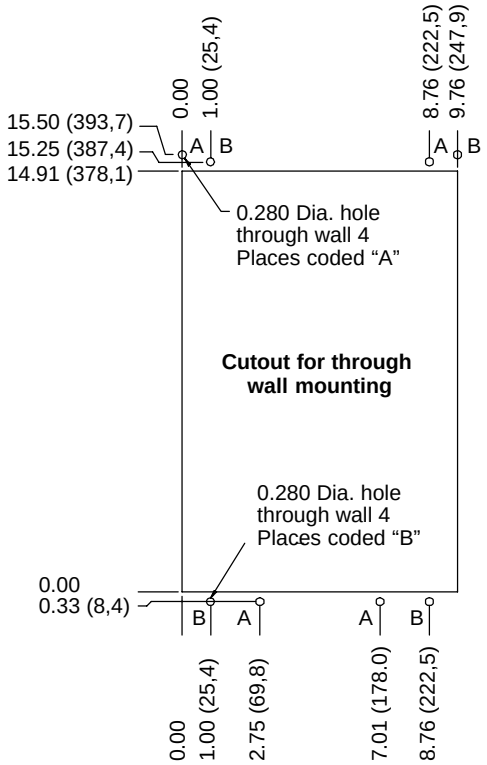

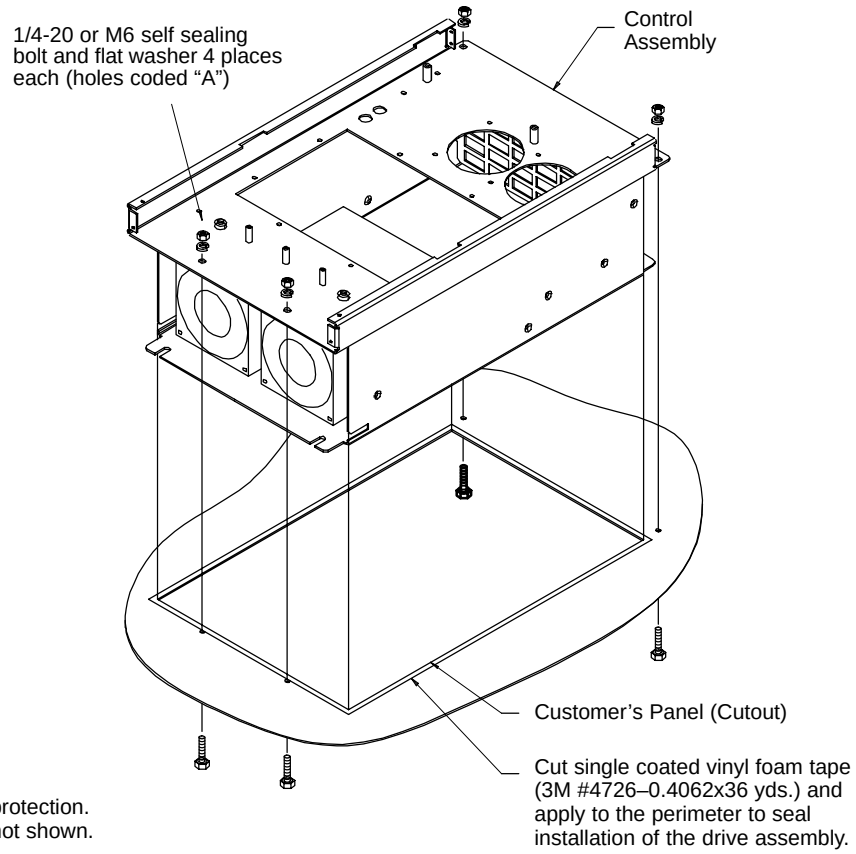

Note: Throughwall mounting provides NEMA 4 protection. For clarity, cover and inside components not shown.

Dimensions Continued

Size D Control

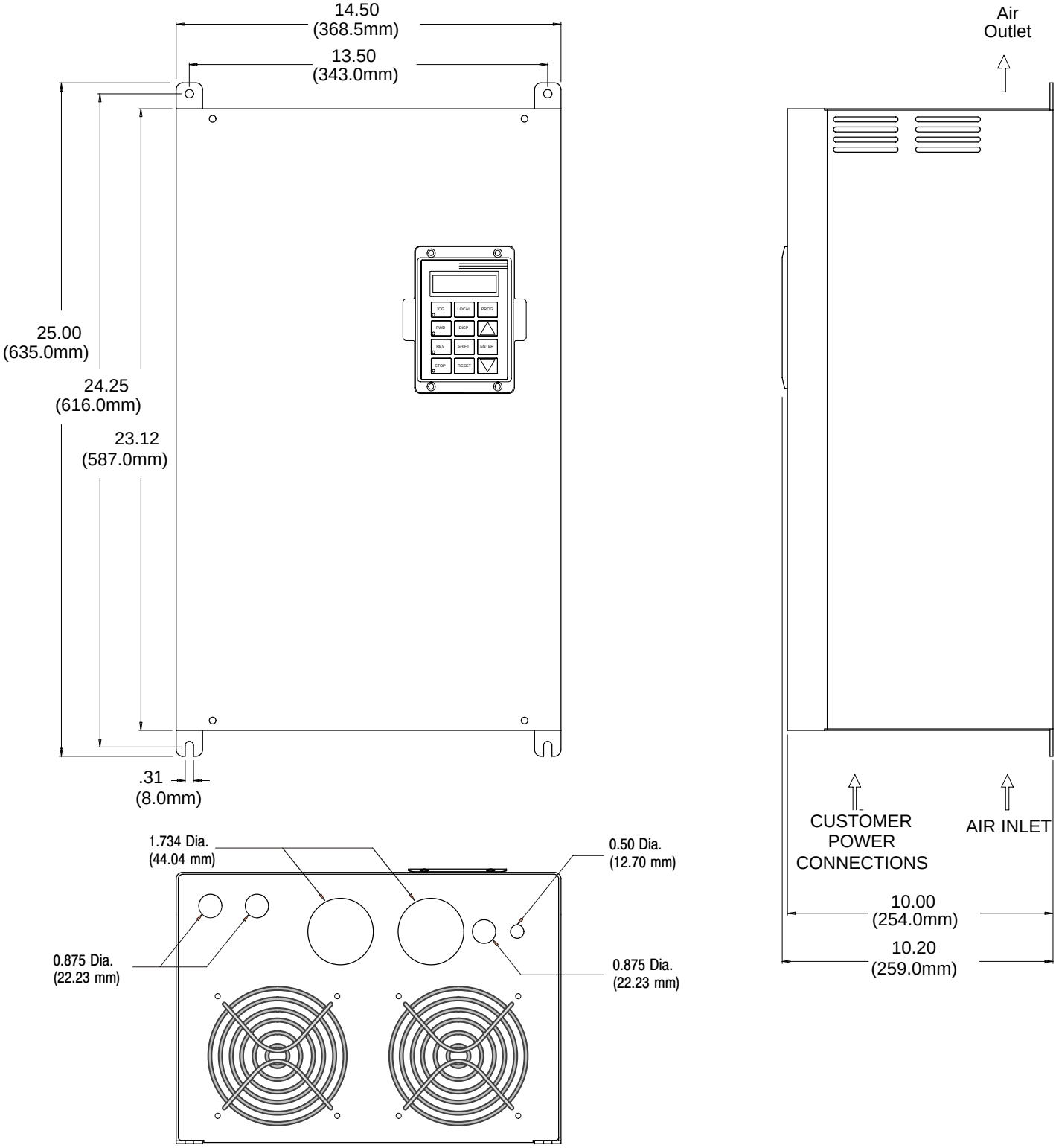

Dimensions Continued

Size E Control

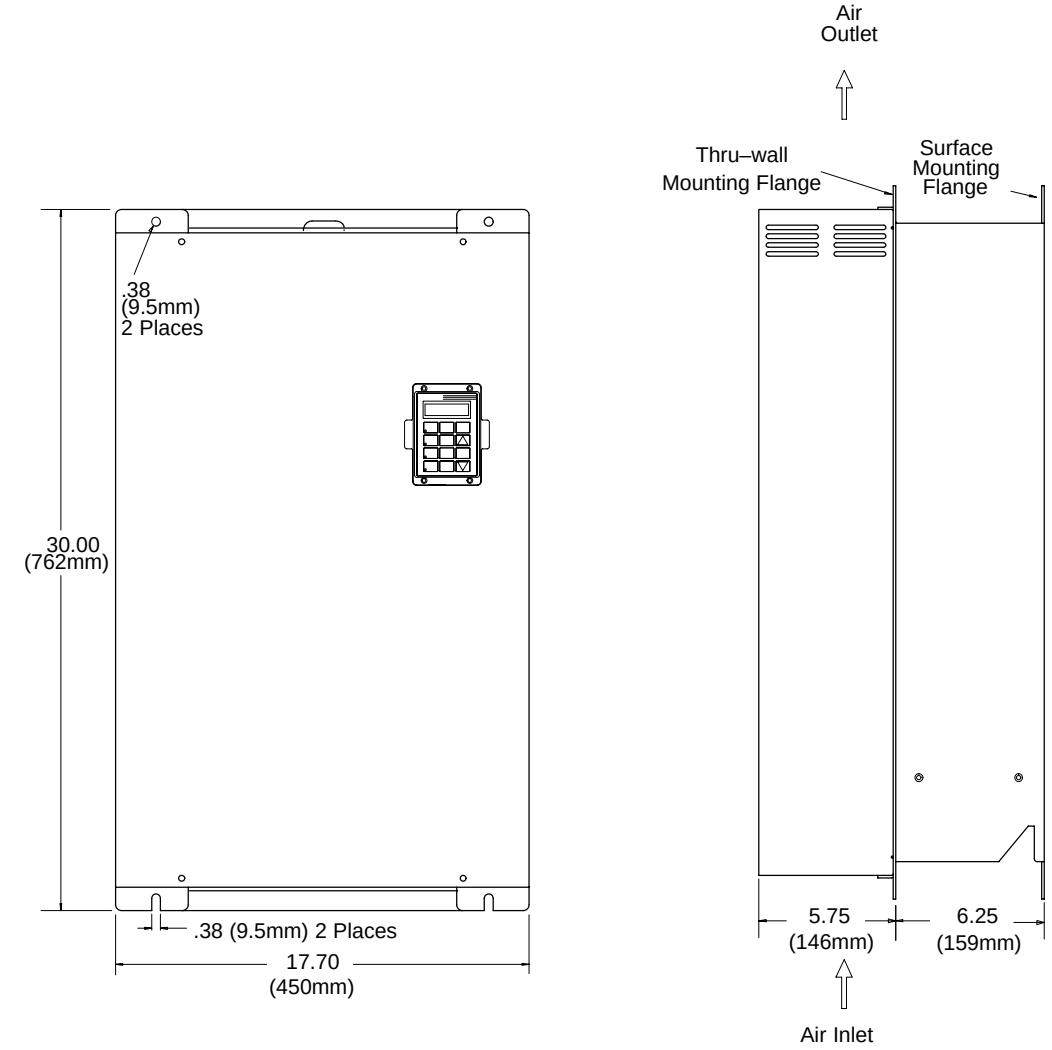

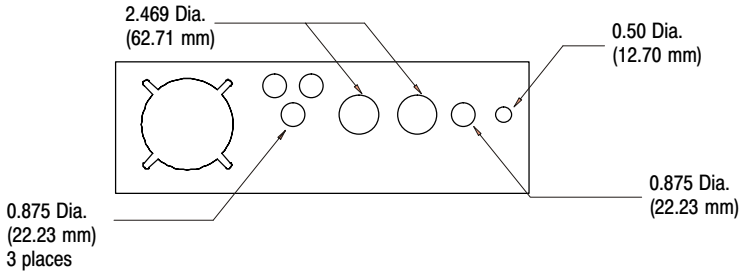

Dimensions Continued

Size E Control – Through–Wall Mounting

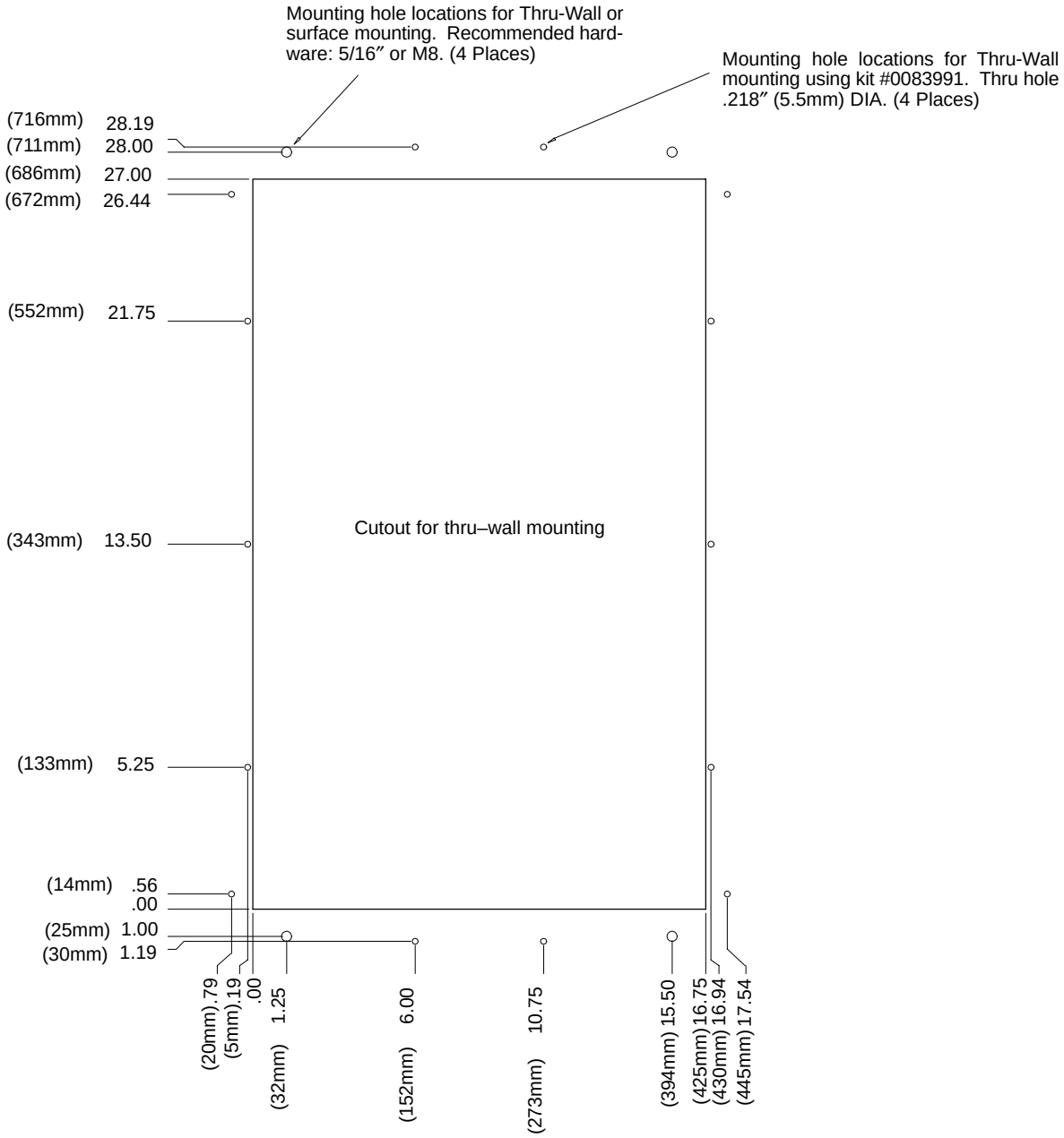

Dimensions Continued

Size E Control – Through–Wall Mounting Continued

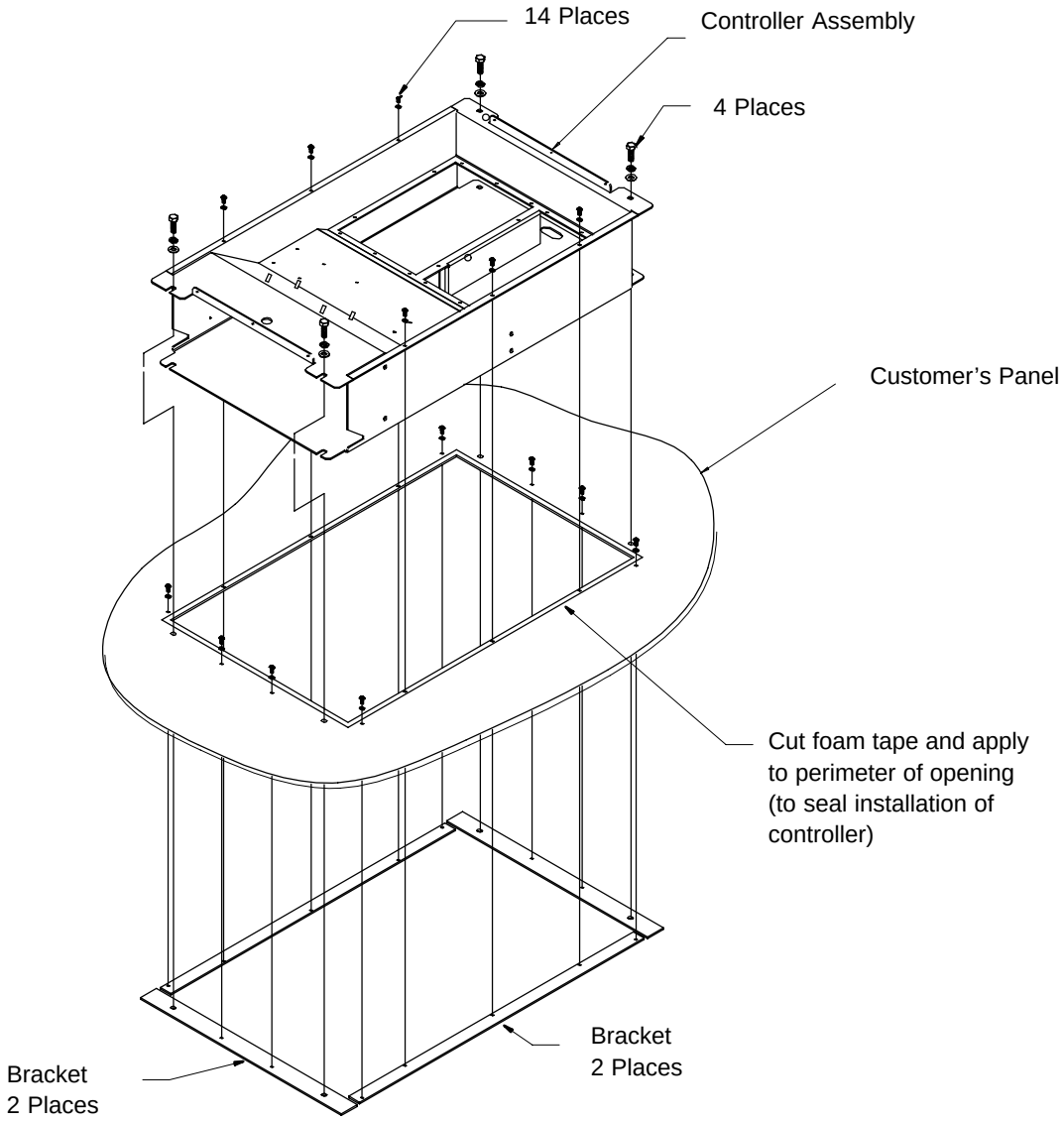

Thru–Wall Mounting Kit No. V0083991
Parts List

QTY	Part No.	Description
2	V1083991	Bracket, small (left & right)
2	V1083992	Bracket, Large (top & bottom)
14	V6300710	Screw, 10-32 x 5/8
14	V6420010	Lock Washer No. 10
4	V6390205	Hex Bolt 5/16-18 x 5/8
4	V6420032	Lock Washer 5/16
4	V6410132	Flat Washer 5/16
1	C6990204	Tape, Single coated vinyl – 3.0 Yards (2.74m)

Dimensions Continued

Size F Control

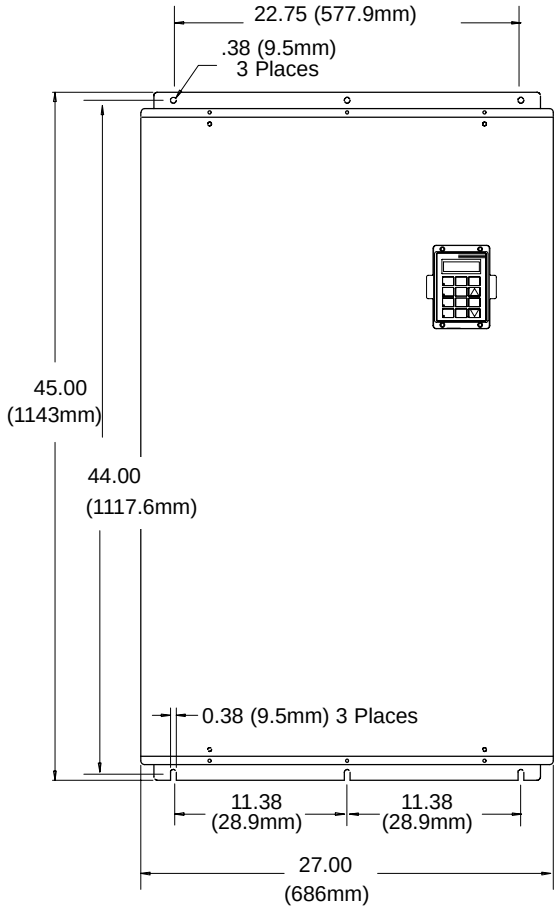

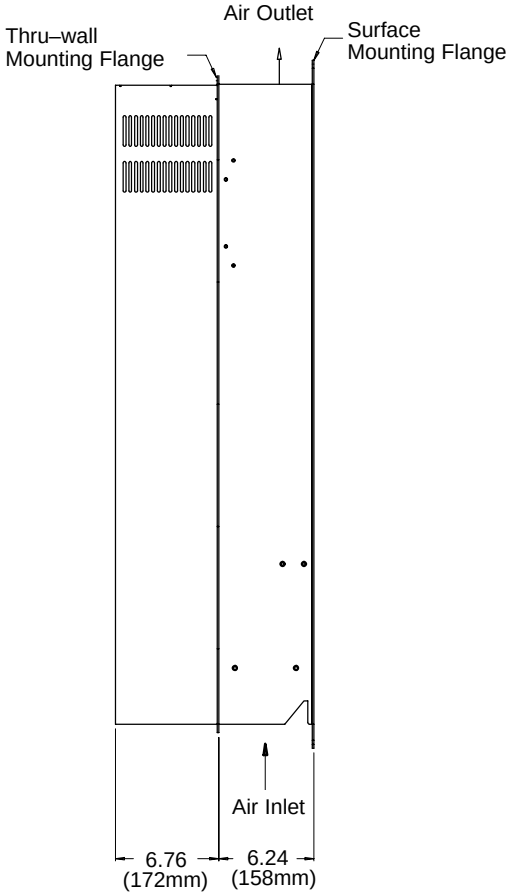

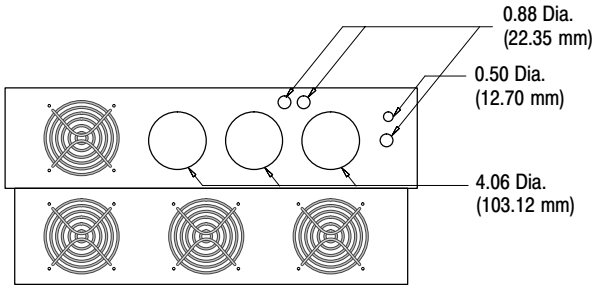

Standard Regen & Non–Regen

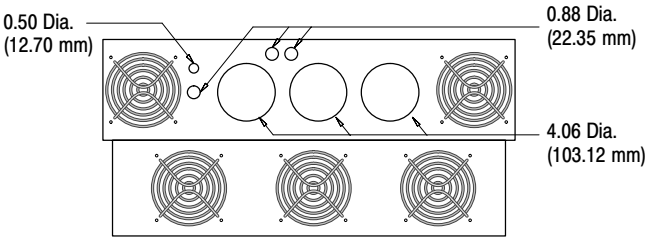

Non–Regen with DC Link Inductor

Dimensions Continued

Size F Control – Through–Wall Mounting

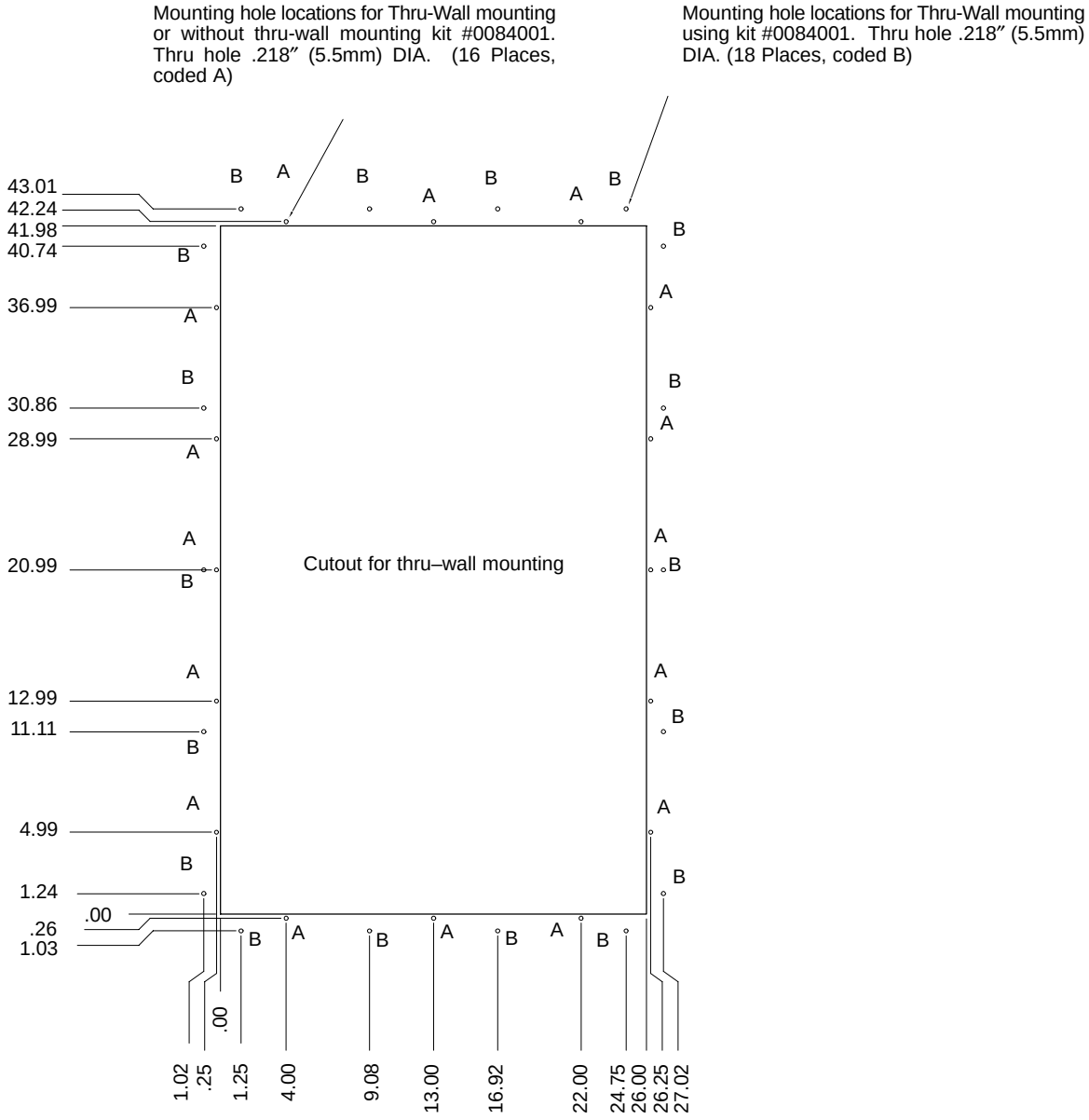

Dimensions Continued

Size F Control – Through–Wall Mounting Continued

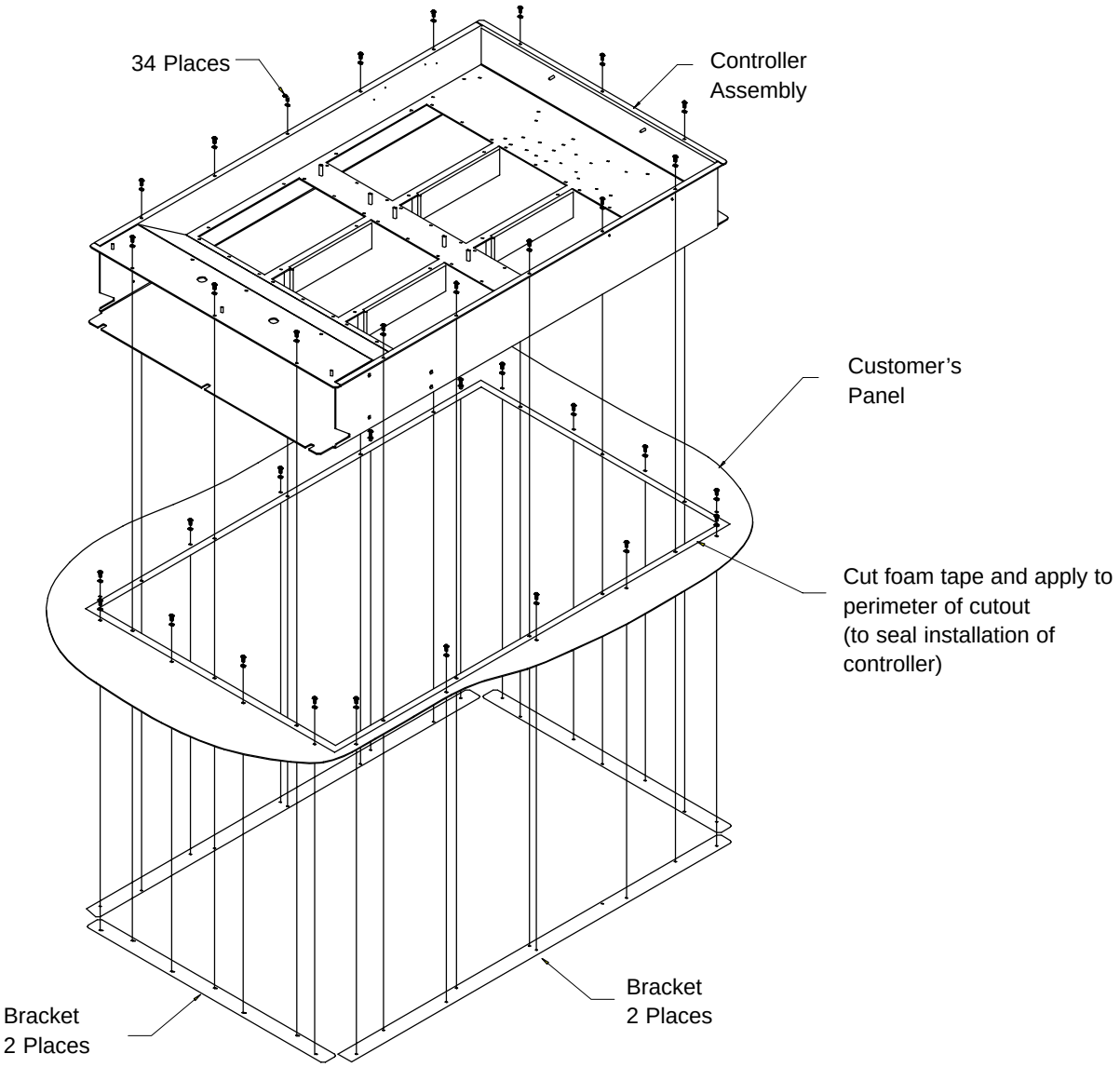

Thru–Wall Mounting Kit No. V0084001
Parts List

QTY	Part No.	Description
2	V1084002	Bracket, small (left & right)
2	V1084001	Bracket, Large (top & bottom)
34	V6300710	Screw, 10-32 x 5/8
34	V6420010	Lock Washer No. 10
1	C6990204	Tape, Single coated vinyl – 4.0 Yards (3.65m)

Dimensions Continued

Size G Control

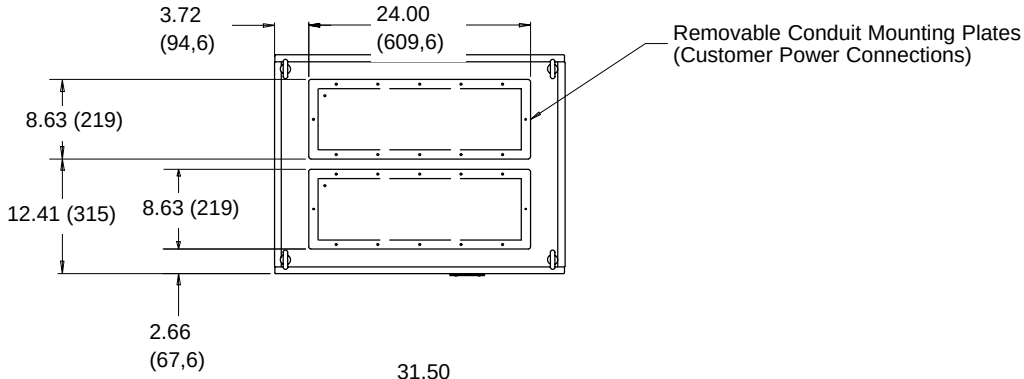

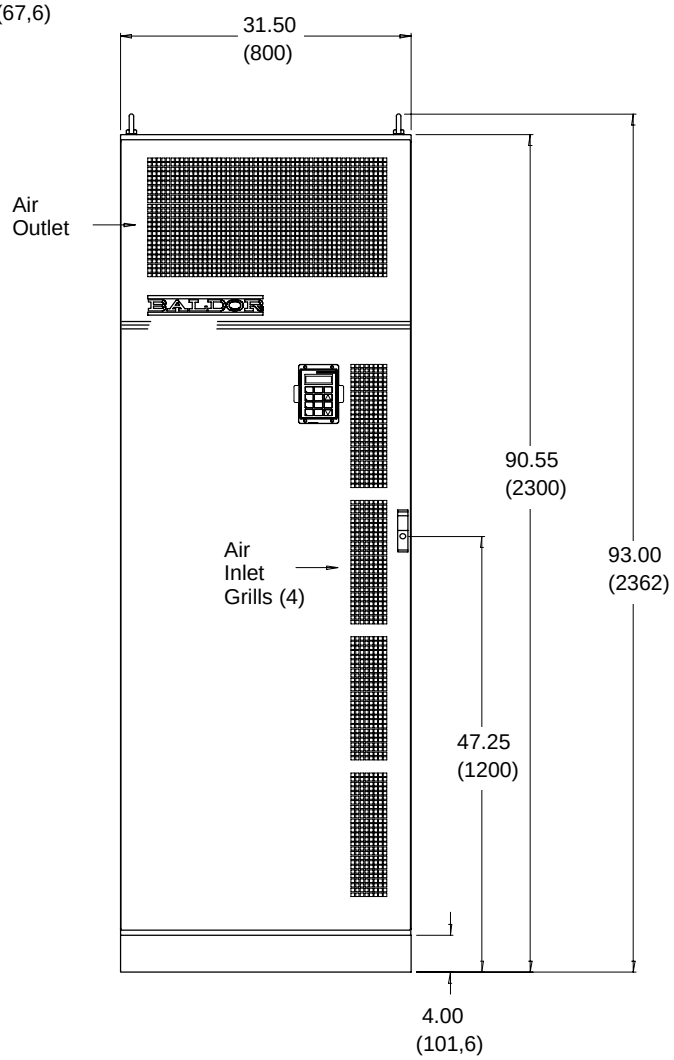

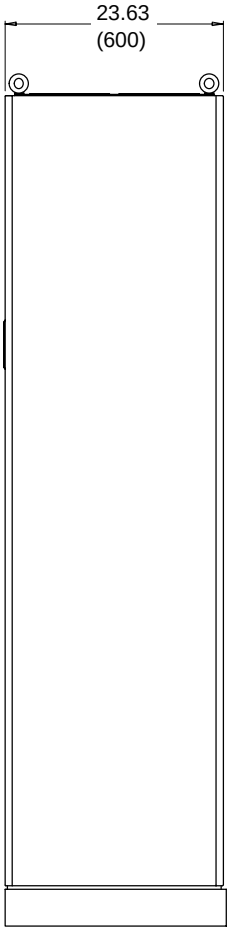

Dimensions Continued

Size G+ Control

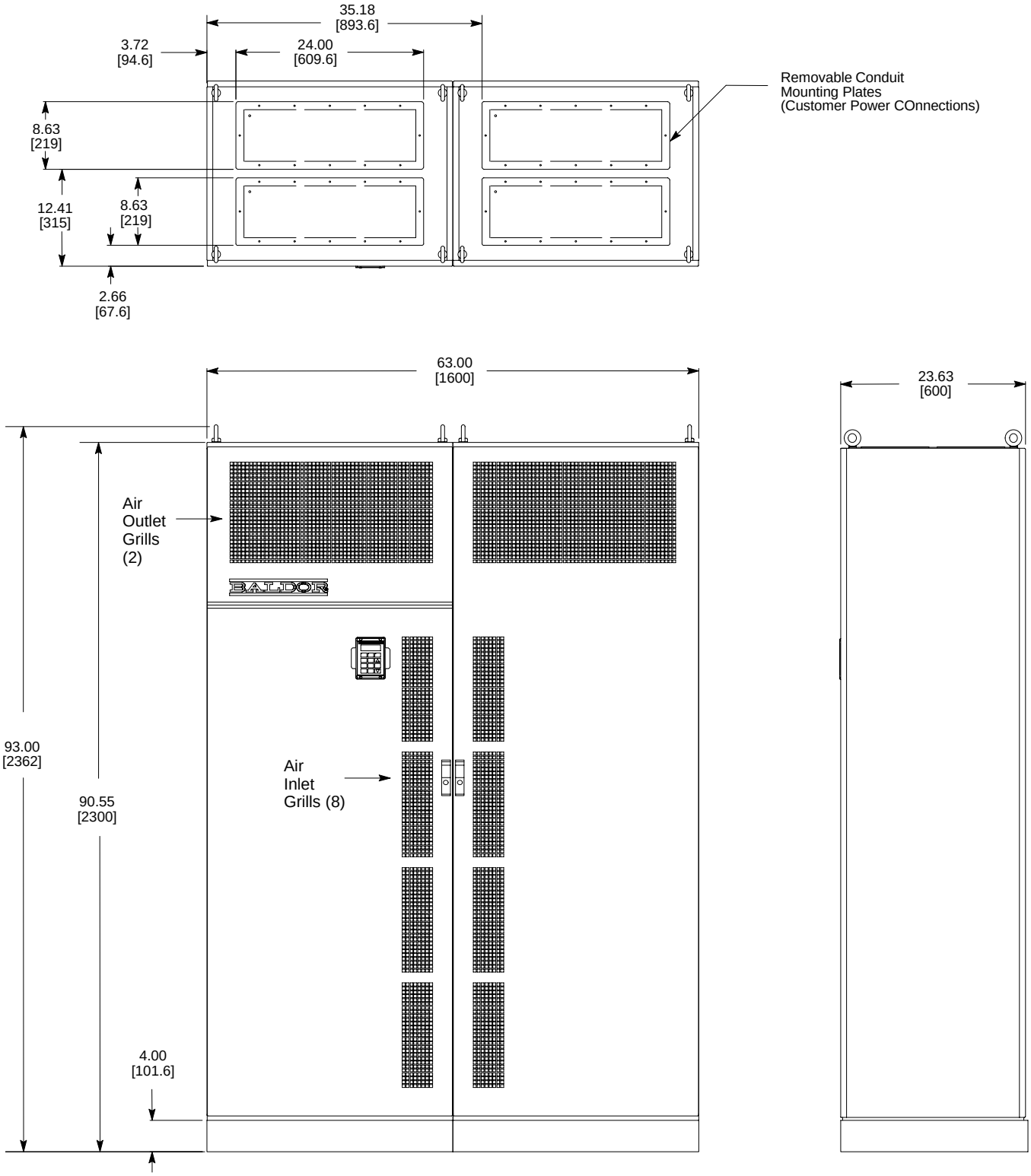

Dimensions Continued

Size H Control

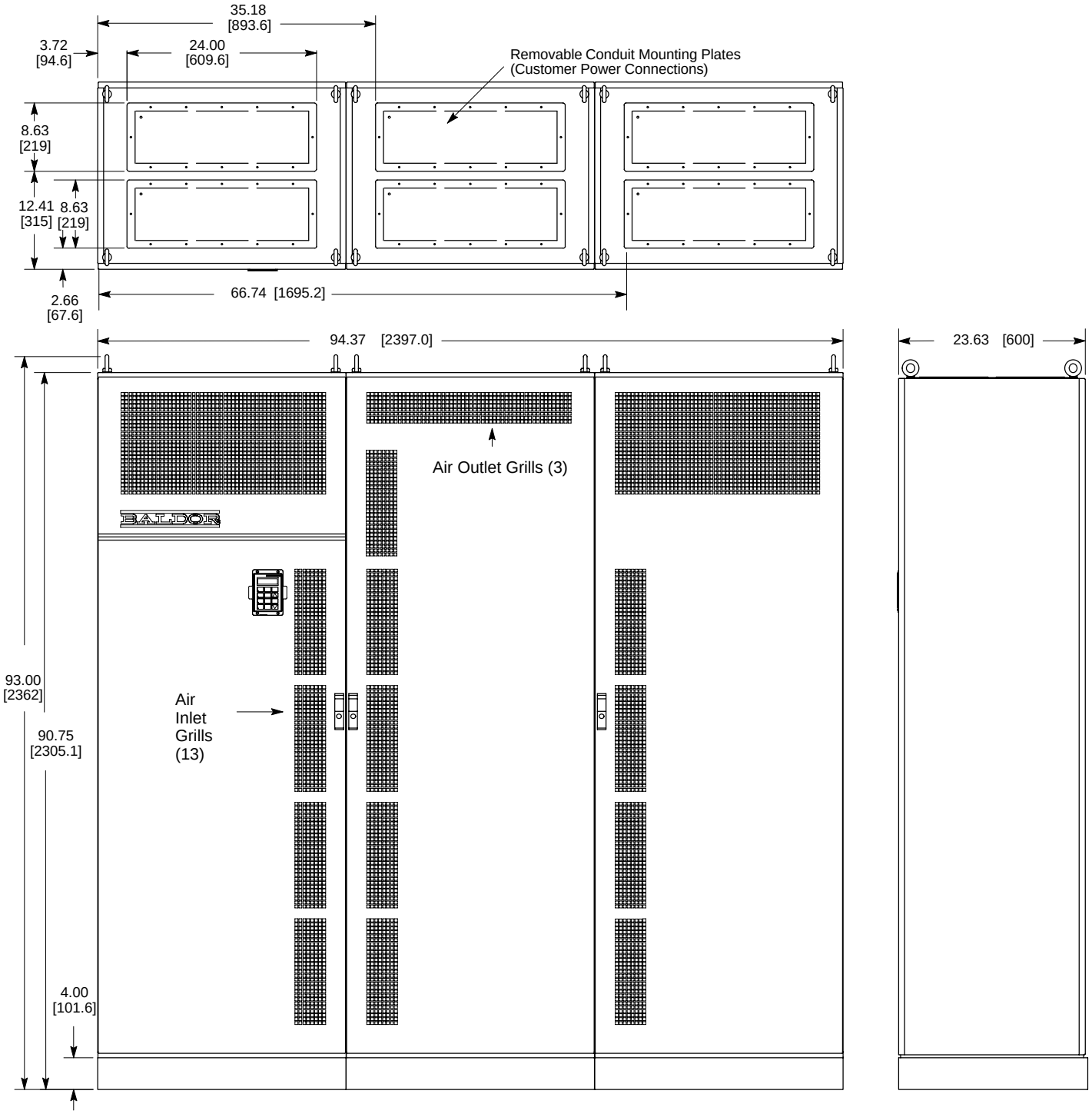

Dynamic Braking (DB) Hardware

For A and B2 size controls, refer to MN782 (RUA assemblies) for additional information. For C2 and larger controls, refer to MN701 (for RGA, RBA and RTA assemblies).

Whenever a motor is abruptly stopped or forced to slow down quicker than if allowed to coast to a stop, the motor becomes a generator. This energy appears on the DC Bus and must be dissipated using dynamic braking hardware. Dynamic braking (DB) hardware can be a resistor or transistor load. Table A-1 provides a matrix of DB turn ON and turn OFF voltages.

Table A-1

Parameter Description	Control Input Voltage		
Nominal Voltage	230VAC	460VAC	575VAC
Overvoltage Fault (Voltage exceeded)	400VDC	800VDC	992VDC
DB ON Voltage	381VDC	762VDC	952VDC
DB UTP (Upper Tolerance Peak)	388VDC	776VDC	970VDC
DB OFF Voltage	375VDC	750VDC	940VDC

$$DB = 1.02 \times \sqrt{2} \times V_{L-L}$$

Braking torque and time should not exceed the available drive braking torque and time rating. The drive braking torque is limited to the available peak current and peak current time rating of the control. If the peak current or peak current time limit is exceeded during braking, the control may trip on an over voltage or a regen power fault. Selecting an oversized control or a line regenerative control should be considered in these cases.

Selection Procedure

1. Calculate the watts to be dissipated using the following formulas for the appropriate load type.
2. Identify the control model number and determine which braking hardware is required based on the model number suffix: E, EO, ER, MO or MR.
3. Select appropriate braking hardware from Baldor 501 Catalog or Tables A-2, A-3 and A-4.

Hoisting Load Calculations

1. Calculate braking duty cycle:

$$\text{Duty Cycle} = \frac{\text{Lowering Time}}{\text{Total Cycle Time}}$$

2. Calculate braking watts to be dissipated in dynamic braking resistors:

$$\text{Watts} = \frac{\text{duty cycle} \times \text{lbs} \times \text{FPM} \times \text{efficiency}}{44}$$

where: lbs = weight of load
FPM = Feet Per Minute
efficiency = mechanical efficiency
i.e., 95% = 0.95

General Machinery Load Calculations:

1. Calculate braking duty cycle:

$$\text{Duty Cycle} = \frac{\text{Braking Time}}{\text{Total Cycle Time}}$$

2. Calculate deceleration torque:

$$T_{Decel} = \frac{\text{RPM change} \times Wk^2}{308 \times \text{time}} - \text{Friction}_{(Lb.Ft.)}$$

where: T_{Decel} = Deceleration torque in Lb.-ft.
Wk^2 = Inertia in Lb.ft.^{2}
time = In seconds

3. Calculate watts to be dissipated in dynamic braking resistor:

$$\text{Watts} = T_{Decel} \times (S_{max} - S_{min}) \times \text{Duty Cycle} \times (0.0712)$$

where: S_{max} = Speed at braking start
S_{min} = Speed after braking

4. Multiply watts calculated in step 3 by 1.25 to allow for unanticipated loads (safety factor).

15V Catalog Numbers with an “EO” or “MO” Suffix

No dynamic braking hardware is installed in these controls. If dynamic braking is required, an optional RBA assembly or a combination of RTA and RGA assemblies should be added. The RBA assembly provides up to 4,000 watts dynamic braking capacity. Should more capacity be required, a combination of an RTA (DB transistor) and RGA (DB resistor) should be used. Refer to RBA, RTA and RGA Assemblies description.

RGA Assemblies

RGA Assemblies include braking resistors completely assembled and mounted in a NEMA 1 enclosure. A listing of available RGA assemblies is provided in Table A-2. The minimum resistance “Minimum Ohms” shown in the table is the minimum resistor value that can be connected to the control without causing damage to the internal dynamic brake transistor for E, ER and MR controls.

RGA assemblies can also be used with EO and MO controls in combination with an RTA assembly when more than 4000 watts of brake capacity is needed. In this case, the minimum resistance of the RGA assembly must be equal to or greater than the minimum resistance specified for the RTA assembly. Refer to Section 3 “Optional Dynamic Brake Hardware” for wiring diagram.

Table A-2 Dynamic Braking Resistor Assemblies (RGA)

Input Volts	HP	Minimum Ohms	Continuous Rated Watts						
			600	1200	2400	4800	6400	9600	14200
230	1 - 2	30	RGA630	RGA1230	RGA2430				
	3 - 5	20	RGA620	RGA1220	RGA2420	RGA4820			
	7.5 - 10	10		RGA1210	RGA2410	RGA4810			
	15 - 20	6		RGA1206	RGA2406	RGA4806			
	25 - 40	4		RGA1204	RGA2404	RGA4804			
	50	2			RGA2402	RGA4802	RGA6402	RGA9602	RGA14202
460	1 - 3	120	RGA6120	RGA12120	RGA24120				
	5 - 7.5	60	RGA660	RGA1260	RGA2460	RGA4860			
	10	30	RGA630	RGA1230	RGA2430	RGA4830			
	15 - 25	20	RGA620	RGA1220	RGA2420	RGA4820			
	30 - 60	10		RGA1210	RGA2410	RGA4810			
	75 - 250	4		RGA1204	RGA2404	RGA4804	RGA6404	RGA9604	RGA14204
	300 - 450	2			RGA2402	RGA4802	RGA6402	RGA9602	RGA14202
575	1 - 2	200	RGA6200	RGA12200	RGA24200				
	3 - 5	120	RGA6120	RGA12120	RGA24120				
	7.5 - 10	60	RGA660	RGA1260	RGA2460	RGA4860			
	15	30	RGA630	RGA1230	RGA2430	RGA4830			
	20 - 30	24		RGA1224	RGA2424	RGA4824			
	40 - 150	14			RGA2414	RGA4814	RGA6414	RGA9614	RGA14214

RBA Assemblies

An RBA Assembly includes a dynamic brake transistor and resistors completely assembled and mounted in a NEMA 1 enclosure. They are designed for EO and MO controls. Select the RBA based on the voltage rating of the control and the dynamic brake watt capacity required. Use Table A-3 to select the RBA assembly. If more than 4,000 watts of brake capacity is required, use a combination of RTA (DB transistor) and RGA (DB resistor) assemblies. Refer to Section 3 “Optional Dynamic Brake Hardware” for wiring diagram.

Table A-3 Dynamic Braking Assemblies (RBA)

	MAXIMUM BRAKING TORQUE IN % OF MOTOR RATING													Cont. Watts	Catalog No.
	HP	**20**	**25**	**30**	**40**	**50**	**60**	**75**	**100**	**150V**	**150**	**200**	**250**		
INPUT VOLTAGE	200 to 240	90%	75%	60%	45%	36%								600	RBA2-610
		150%	125%	100%	75%	62%								1800	RBA2-1806
		150%	150%	150%	115%	92%								4000	RBA2-4004
	380 to 480	150%	150%	120%	90%	72%	60%	48%	36%	28%				600	RBA4-620
		150%	150%	120%	90%	72%	60%	48%	36%	28%				1800	RBA4-1820
		150%	150%	150%	150%	150%	120%	96%	72%	56%	48%	36%	29%	4000	RBA4-4010
	550 to 600	150%	150%	120%	90%	72%	60%	48%	36%	28%				600	RBA5-624
		150%	150%	120%	90%	72%	60%	48%	36%	28%				1800	RBA5-1824
		150%	150%	150%	150%	150%	120%	96%	72%	56%				4000	RBA5-4014

RTA Assemblies

RTA assemblies include a dynamic brake transistor and gate driver circuit board completely assembled and mounted in a NEMA 1 enclosure. Brake resistors are not included in the RTA assembly. Each RTA assembly is designed to be used with an RGA dynamic brake resistor assembly. The minimum resistance of the RGA assembly must be equal to or greater than the minimum resistance specified for the RTA assembly. Select the RTA based on the voltage rating of the control and HP which provides the dynamic brake watt capacity required. Use Table A-4 to select the RTA assembly. Refer to Section 3 “Optional Dynamic Brake Hardware” for wiring diagram.

Table A-4 Dynamic Braking Transistor Assemblies (RTA)

HP	MAXIMUM BRAKING TORQUE IN % OF MOTOR RATING									
	208 - 230 VAC			380 - 480 VAC				550 - 600 VAC		
20	150%	150%	150%	150%	150%	150%	150%	150%	150%	150%
25	125%	150%	150%	150%	150%	150%	150%	150%	150%	150%
30	100%	150%	150%	120%	150%	150%	150%	150%	150%	150%
40	75%	115%	150%	90%	150%	150%	150%	127%	150%	150%
50	62%	92%	150%	72%	150%	150%	150%	100%	150%	150%
60				60%	150%	150%	150%	85%	145%	150%
75				48%	96%	150%	150%	68%	116%	150%
100				36%	72%	150%	150%	50%	87%	150%
150V				28%	56%	150%	150%	40%	70%	150%
150					48%	126%	150%	34%	58%	150%
200					36%	95%	150%	25%	44%	150%
250					29%	76%	150%		35%	122%
300						62%	125%		29%	100%
350						54%	108%			87%
400						47%	94%			76%
450						41%	84%			68%
CAT. NO.	**RTA2-6**	**RTA2-4**	**RTA2-2**	**RTA4-20**	**RTA4-10**	**RTA4-4**	**RTA4-2**	**RTA5-24**	**RTA5-14**	**RTA5-4**
Minimum Ohms	6	4	2	20	10	4	2	24	14	4

Parameter Values (Version S15V–5.00)

Table B-1 Parameter Block Values Level 1

Level 1 Blocks					
Block Title	**Parameter**	P#	**Adjustable Range**	**Factory**	**User Setting**
PRESET SPEEDS	PRESET SPEED #1	1001	0-MAX Speed	0.00Hz	
	PRESET SPEED #2	1002	0-MAX Speed	0.00Hz	
	PRESET SPEED #3	1003	0-MAX Speed	0.00Hz	
	PRESET SPEED #4	1004	0-MAX Speed	0.00Hz	
	PRESET SPEED #5	1005	0-MAX Speed	0.00Hz	
	PRESET SPEED #6	1006	0-MAX Speed	0.00Hz	
	PRESET SPEED #7	1007	0-MAX Speed	0.00Hz	
	PRESET SPEED #8	1008	0-MAX Speed	0.00Hz	
	PRESET SPEED #9	1009	0-MAX Speed	0.00Hz	
	PRESET SPEED #10	1010	0-MAX Speed	0.00Hz	
	PRESET SPEED #11	1011	0-MAX Speed	0.00Hz	
	PRESET SPEED #12	1012	0-MAX Speed	0.00Hz	
	PRESET SPEED #13	1013	0-MAX Speed	0.00Hz	
	PRESET SPEED #14	1014	0-MAX Speed	0.00Hz	
	PRESET SPEED #15	1015	0-MAX Speed	0.00Hz	
ACCEL/DECEL RATE	ACCEL TIME #1	1101	0 to 3600seconds	3.0s	
	DECEL TIME #1	1102	0 to 3600seconds	3.0s	
	S-CURVE #1	1103	OFF, 20, 40, 60, 80, 100%	OFF	
	ACCEL TIME #2	1104	0 to 3600seconds	3.0s	
	DECEL TIME #2	1105	0 to 3600seconds	3.0s	
	S-CURVE #2	1106	OFF, 20, 40, 60, 80, 100%	OFF	
JOG SETTINGS	JOG SPEED	1201	0-MAX Speed	7Hz	
	JOG ACCEL TIME	1202	0 to 3600seconds	3.0s	
	JOG DECEL TIME	1203	0 to 3600seconds	3.0s	
	JOG S-CURVE	1204	OFF, 20, 40, 60, 80, 100%	OFF	
KEYPAD SETUP	KEYPAD STOP KEY	1301	REMOTE OFF REMOTE ON	REMOTE ON	
	KEYPAD STOP MODE	1302	REGEN, COAST	REGEN	
	KEYPAD RUN FWD	1303	OFF, ON	ON	
	KEYPAD RUN REV	1304	OFF, ON	ON	
	KEYPAD JOG FWD	1305	OFF, ON	ON	
	KEYPAD JOG REV	1306	OFF, ON	ON	
	3 SPEED RAMP	1307	OFF, ON	OFF	
	SWITCH ON FLY	1308	OFF, ON	OFF	
	LOC. HOT START	1309	OFF, ON	OFF	

Table B-1 Parameter Block Values Level 1 Continued

Level 1 Blocks - Continued					
Block Title	**Parameter**	P#	**Adjustable Range**	**Factory**	**User Setting**
INPUT	OPERATING MODE	1401	Keypad Standard Run 15 Speed Fan Pump 2Wire Fan Pump 3Wire Serial Process CTRL 3SPD ANA 2WIRE 3SPD ANA 3WIRE EPOT – 2WIRE EPOT – 3WIRE	Keypad	
	COMMAND SELECT	1402	Potentiometer 0-10 VOLTS 0-5 VOLTS 4-20 mA EXB PULSE FOL 10V EXB 4-20 mA EXB 3-15 PSI EXB Tachometer EXB None	Potentio-Meter	
	ANA CMD INVERSE	1403	OFF, ON	OFF	
	ANA CMD OFFSET	1404	-20.0 to +20.0% (where ±0.5V=±20%)	0.0 %	
	ANA CMD GAIN	1405	80.0% to 120%	100.0%	
	CMD SEL FILTER	1406	0-6	3	
OUTPUT	DIGITAL OUT #1	1501	Ready Zero Speed At Speed At Set Speed Overload Keypad Control Fault Drive On Reverse Process Error	Ready	
	DIGITAL OUT #2	1502		Zero Speed	
	DIGITAL OUT #3	1503		At Speed	
	DIGITAL OUT #4	1504		Fault	
	ZERO SPD SET PT	1505	0-MAX Speed	6.00Hz	
	AT SPEED BAND	1506	0-20Hz	2.00Hz	
	SET SPEED POINT	1507	0-MAX Speed	60Hz	

Table B-1 Parameter Block Values Level 1 Continued

Level 1 Blocks - Continued					
Block Title	**Parameter**	P#	**Adjustable Range**	**Factory**	**User Setting**
OUTPUT (Continued)	ANALOG OUT #1	1508	Frequency Freq Command AC Current AC Voltage Torque (Load) Power Bus Voltage Process Fdbk Setpoint Cmd Zero Cal 100% Cal	Frequency	
	ANALOG OUT #2	1509		AC Current	
	ANALOG #1 SCALE	1510	10 - 160%	100.0%	
	ANALOG #2 SCALE	1511	10 - 160%	100.0%	
V/HZ AND BOOST	CTRL BASE FREQUENCY	1601	50.00 - 400.00Hz	60.0Hz	
	TORQUE BOOST	1602	0.0 - 15.0%	2.5%	
	DYNAMIC BOOST	1603	0.0 - 100%	0.0%	
	SLIP COMP ADJ	1604	0.00 - 6.00Hz	0.00Hz	
	V/HZ PROFILE	1605	LINEAR, 33% SQR LAW, 67% SQR LAW, 100% SQR LAW 3 POINTS	Linear	
	V/HZ 3–PT VOLTS	1606	0-100%	0.0%	
	V/HZ 3–PT FREQUENCY	1607	0-9.99Hz	0.00Hz	
	MAX OUTPUT VOLTS	1608	0-100	100.0%	
LEVEL 2 BLOCK	ENTERS LEVEL 2 MENU - See Table B-2.				
PRESS ENTER FOR PROGRAMMING EXIT	Exit programming mode and return to display mode.				

Table B-2 Parameter Block Values Level 2

Level 2 Blocks					
Block Title	**Parameter**	**P#**	**Adjustable Range**	**Factory**	**User Setting**
OUTPUT LIMITS	OPERATING ZONE	2001	STD VAR TQ QUIET VAR TQ	STD VAR TQ	
	MIN OUTPUT FREQ	2002	0-MAX Frequency	0.00Hz	
	MAX OUTPUT FREQ	2003	0-MAX Frequency	60.00Hz	
	PK CURRENT LIMIT	2004	1A to Peak Rated Current	PK Control Rating	
	PWM FREQUENCY	2005	1-5kHz (Standard) 1-15kHz (Quiet)	2500Hz	
	REGEN LIMIT	2006	OFF, ON	OFF	
	REGEN LIMIT ADJ	2007	0 - 500	0Hz	
CUSTOM UNITS	MAX DECIMAL PLACES	2101	0-5	0	
	VALUE AT SPEED	2102	1-65535/1-65535	0./ 01000	
	VALUE DEC PLACES	2103	0-5 (Serial Only)	0	
	VALUE SPEED REF	2104	1 to 65535 (Serial Only)	00000/ 01000	
	UNITS OF MEASURE	2105	See Table 4-2.	-	
	UNITS OF MEASURE 2	2106	See Table 4-2. (Serial Only)	-	
PROTECTION	EXTERNAL TRIP	2201	OFF, ON	OFF	
	LOCAL ENABLE INP	2202	OFF, ON	OFF	
MISCELLANEOUS	RESTART AUTO/MAN	2301	Automatic, Manual	Manual	
	RESTART FAULT/HR	2302	0-10	0	
	RESTART DELAY	2303	0-120Seconds	0s	
	LANGUAGE SELECT	2304	English, Espanol	English	
	FACTORY SETTINGS	2305	NO, STD Settings, 50Hz / 400Volts	NO	
	STABIL ADJ LIMIT	2306	0-1.50Hz	1.00Hz	
	STABILITY GAIN	2307	Bus Current Method: 0-9 Phase Current Method: 1-6	1 1	
SECURITY CONTROL	SECURITY STATE	2401	Off Local Security Serial Security Total Security	OFF	
	ACCESS TIMEOUT	2402	0-600seconds	0s	
	ACCESS CODE	2403	0-9999	9999	
MOTOR DATA	MOTOR VOLTAGE	2501	0-999 VOLTS	Factory Set	
	MOTOR RATED AMPS	2502	0-999.9	Factory Set	
	MOTOR RATED SPD	2503	0-32767RPM	1750RPM	
	MOTOR RATED FREQ	2504	50-400Hz	60.0Hz	
	MOTOR MAG AMPS	2505	0-85% Rated Current	Factory Set	

Table B-2 Parameter Block Values Level 2 Continued

Level 2 Blocks - Continued					
Block Title	**Parameter**	**P#**	**Adjustable Range**	**Factory**	**User Setting**
BRAKE ADJUST	RESISTOR OHMS	2601	0-255 OHMS	Factory Set	
	RESISTOR WATTS	2602	0-32767 WATTS	Factory Set	
	DC BRAKE VOLTAGE	2603	1.0 to 15%	5.0%	
	DC BRAKE FREQ	2604	0.00 to 400.00Hz	6.00Hz	
	BRAKE ON STOP	2605	OFF, ON	OFF	
	BRAKE ON REVERSE	2606	OFF, ON	OFF	
	STOP BRAKE TIME	2607	0.0 to 60.0seconds	3.0s	
	BRAKE ON START	2608	OFF, ON	OFF	
	START BRAKE TIME	2609	0.0 to 60.0seconds	3.0s	
PROCESS CONTROL	PROCESS FEEDBACK	2701	Potentiometer 0-10VOLTS 0-5 VOLTS 4-20mA 10V EXB 4-20mA EXB 3-15 PSI TACHOMETER EXB NONE	NONE	
	PROCESS INVERSE	2702	OFF, ON	OFF	
	SETPOINT SOURCE	2703	Setpoint Command Potentiometer 0-10VOLTS 0-5 VOLTS 4-20mA 10V EXB 4-20mA EXB 3-15 PSI Tachometer EXB None	NONE	
	SETPOINT COMMAND	2704	–100% to +100%	0.0 %	
	SET PT ADJ LIMIT	2705	0-100%	10 %	
	AT SETPOINT BAND	2706	0-100%	10 %	
	PROCESS PROP GAIN	2707	0-2000	0	
	PROCESS INT GAIN	2708	0-9.99Hz	0.00Hz	
	PROCSS DIFF GAIN	2709	0-1000	0	
	FOLLOW I:O RATIO	2710	1-65535:1-65535	1:1	
	FOLLOW I:O OUT	2711	1-65535 (Serial Only)	1	
	ENCODER LINES	2712	20-65535	1024 PPR	

Table B-2 Parameter Block Values Level 2 Continued

Level 2 Blocks - Continued					
Block Title	**Parameter**	**P#**	**Adjustable Range**	**Factory**	**User Setting**
SKIP FREQUENCY	SKIP FREQ #1	2801	0-400Hz	0Hz	
	SKIP BAND #1	2802	0-50Hz	0Hz	
	SKIP FREQ #2	2803	0-400Hz	0Hz	
	SKIP BAND #2	2804	0-50Hz	0Hz	
	SKIP FREQ #3	2805	0-400Hz	0Hz	
	SKIP BAND #3	2806	0-50Hz	0Hz	
SYNCHRO–START	SYNCHRO-STARTS	2901	OFF, Restarts Only, All Starts	OFF	
	SYNC START FREQUENCY	2902	Max Frequency, Set Frequency	MAX Frequency	
	SYNC SCAN V/F	2903	5.0-100.0%	10.0%	
	SYNC SETUP TIME	2904	0.2-2.0seconds	0.2s	
	SYNC SCAN TIME	2905	1.0-10.0seconds	2.0s	
	SYNC V/F RECOVER	2906	0.2-2.0seconds	0.2s	
	SYNC DIRECTION	2907	Sync Forward and Reverse Sync Forward, Sync Reverse,	Sync FWD & REV	
COMMUNICATIONS	PROTOCOL	3001	RS–232 ASCII, RS-485 ASCII RS–232 BBP, RS-485 BBP	RS–232 ASCII	
	BAUD RATE	3002	9600, 19.2KB, 38.4KB, 57.6KB, 115.2KB, 230.4KB	9600	
	DRIVE ADDRESS	3003	0 - 31	0	
LEVEL 1 BLOCK	ENTERS LEVEL 1 MENU - See Table B-1.				
PRESS ENTER FOR PROGRAMMING EXIT	Exit programming mode and return to display mode.				

Appendix C

Remote Keypad Mounting Template

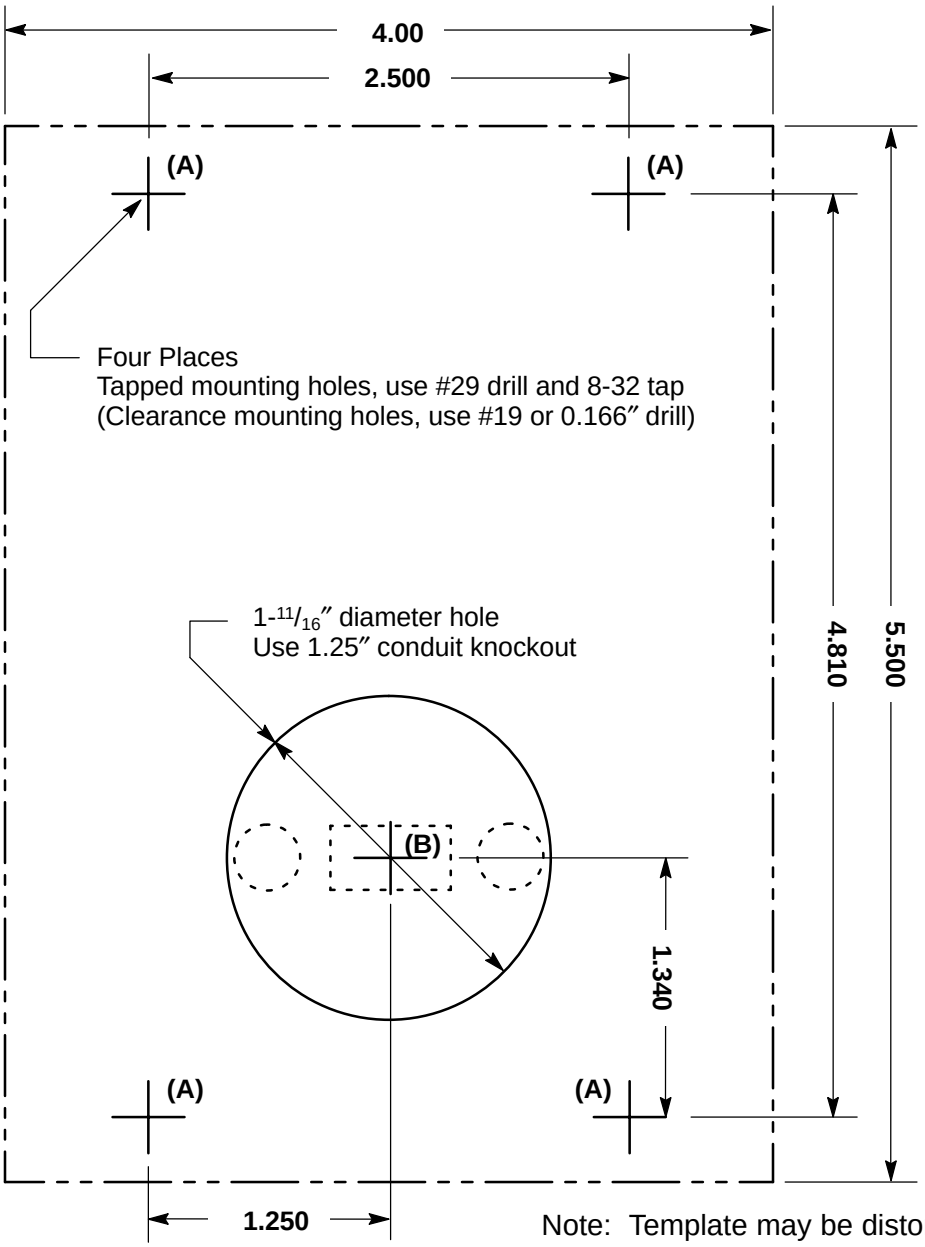

Note: Template may be distorted due to reproduction.

BALDOR ELECTRIC COMPANY
P.O. Box 2400
Ft. Smith, AR 72902–2400
(501) 646–4711
Fax (501) 648–5792

© Baldor Electric Company
MN715V

Printed in USA
7/00 C&J5000