BALDOR®
MOTORS AND DRIVES

# Introduction to Process Control

**Operating Manual**

6/98 MN707

# Table of Contents

# Section 1
# Process Control Defined

## Safety Notice

This equipment or the equipment to which it is attached may present hazardous conditions. Please read and become familiar with the safety statements and all Warnings and Cautions stated in the control manual and other manuals for your equipment.

## Process Control Mode

This defines the terms and concepts and describes the use of, programming, and features available in the process control mode. Several examples are explained in Appendix A.

The Process Control Mode is an auxiliary closed loop control system incorporated into the standard software. The process control mode is presently available in the 15H Inverter software S15-4.02 or higher, 18H Vector software S18-2.18 or higher, the 20H Digital DC Drive software S20-1.18 or higher, and the 23H AC Brushless software S23-1.03 or higher.

### What is “Process Control”?

Process control is a method by which a manufacturing “Process” can be continually and automatically controlled, with a consistent result. Process control defines the general system components, and their capabilities. Process Control can have many names, some of them are:

- Continuous batch
- Closed loop control
- Pump control
- Level control
- Zone heat control
- Automatic control

### Process Control offers the following advantages:

- Produce a product with repeatable accuracy.
- Effective and efficient use of plant facilities.
- Allow the operator to do more skilled and productive work.
- Reduce job boredom and prevent of workers being exposed to hazardous operations.
- Greater productivity, reduced waste.

### Baldor Controls with built in PID offers the following advantages:

- No interfacing of external “Black boxes”.
- Low cost.
- Simple set up for basic process(es).
- Factory assistance.

## What is “PID” control?

“PID” (or Proportional, Integral, Differential) control is the specific method by which “Process Control” is implemented. “PID” control offers consistency of a process or operation. A properly adjusted control system will run independently of most outside influences (disturbances). In fact, PID control was specifically intended to maintain process consistency, and compensate for outside disturbances.

Applications for “PID” control are numerous and varied, from the baking of crackers, controlling the temperature of molten steel, pumping many thousands of gallons of water per minute, to environmental control, etc.

In the past, “PID” “Single loop controllers” have been sold as stand alone items, to be interfaced to controls. Today, Baldor offers many of our control products with process control capabilities built in, at no extra cost to the customer. See Figure 1-1.

**Figure 1-1 PID Control**

**Third Party Process Control System**

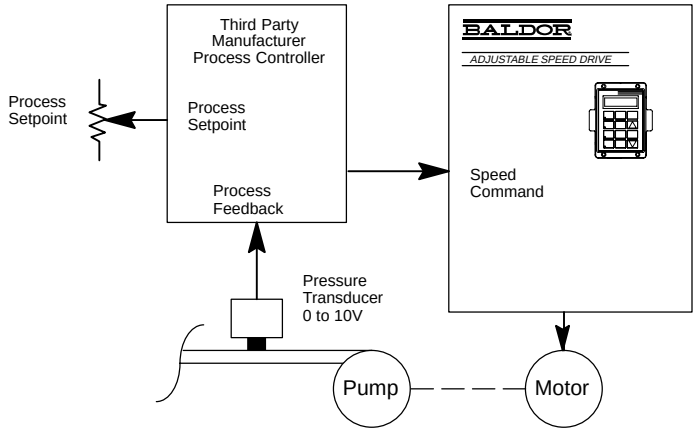


**Using The Baldor Process Mode Software**

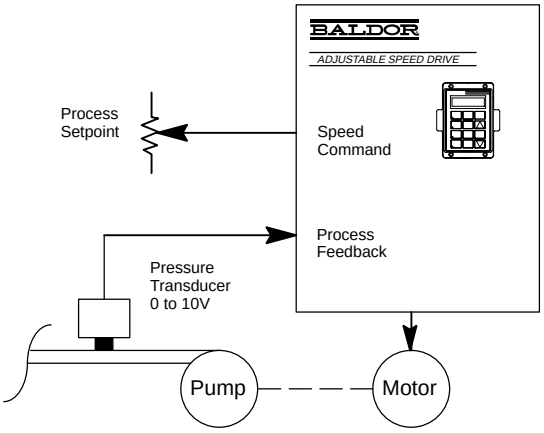

### Definition of open loop control

A control system that does not sense it's output and does not make corrections to the process is called an open loop control system. There is no feedback to the control system for it to regulate the process.

### Practical example of open loop control

An Inverter control and motor (Drive) whose speed is controlled only by a speed potentiometer is an example of open loop control. Without any feedback, the Inverter does not know exactly how fast the motor shaft is turning. See Figure 1-2.

**Figure 1-2 Open Loop Control**

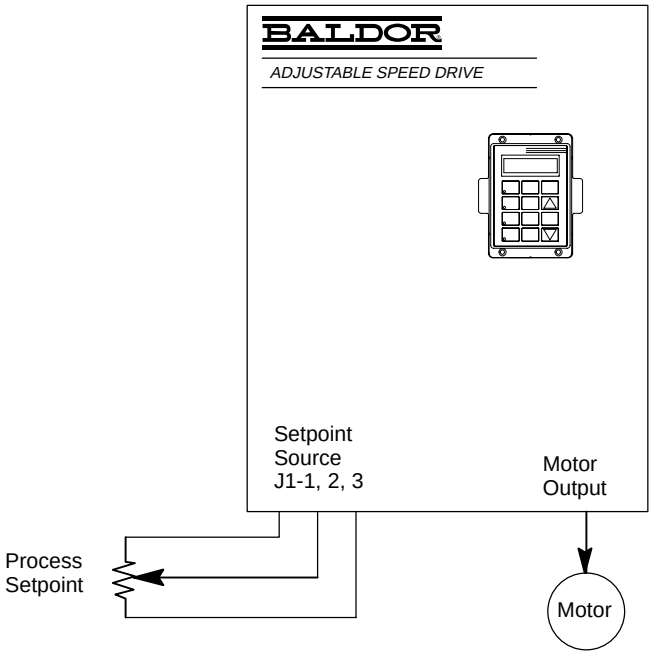

**Definition Of Closed Loop Control**

A control system that senses it's output and makes corrections to the process is called a closed loop control system. There is feedback to the control system so it can regulate the process.

**Practical example of Closed Loop Control**

A vector drive is running a fan whose setpoint is controlled by a potentiometer, **Plus,** pressure transducer feedback which allows the vector control to precisely regulate static pressure in a fresh air plenum of a ventilation system. The vector control compares feedback from the pressure transducer (process feedback) to the potentiometer (setpoint). If an error is generated as a result of this comparison, the control will speed up or slow down to attempt to reduce the process error to zero. When (and if) the process error is zero, the motor speed at that point is exactly the speed required to maintain the commanded duct pressure. This example is shown in Figure 1-3.

**Figure 1-3 HVAC Closed Loop Control**

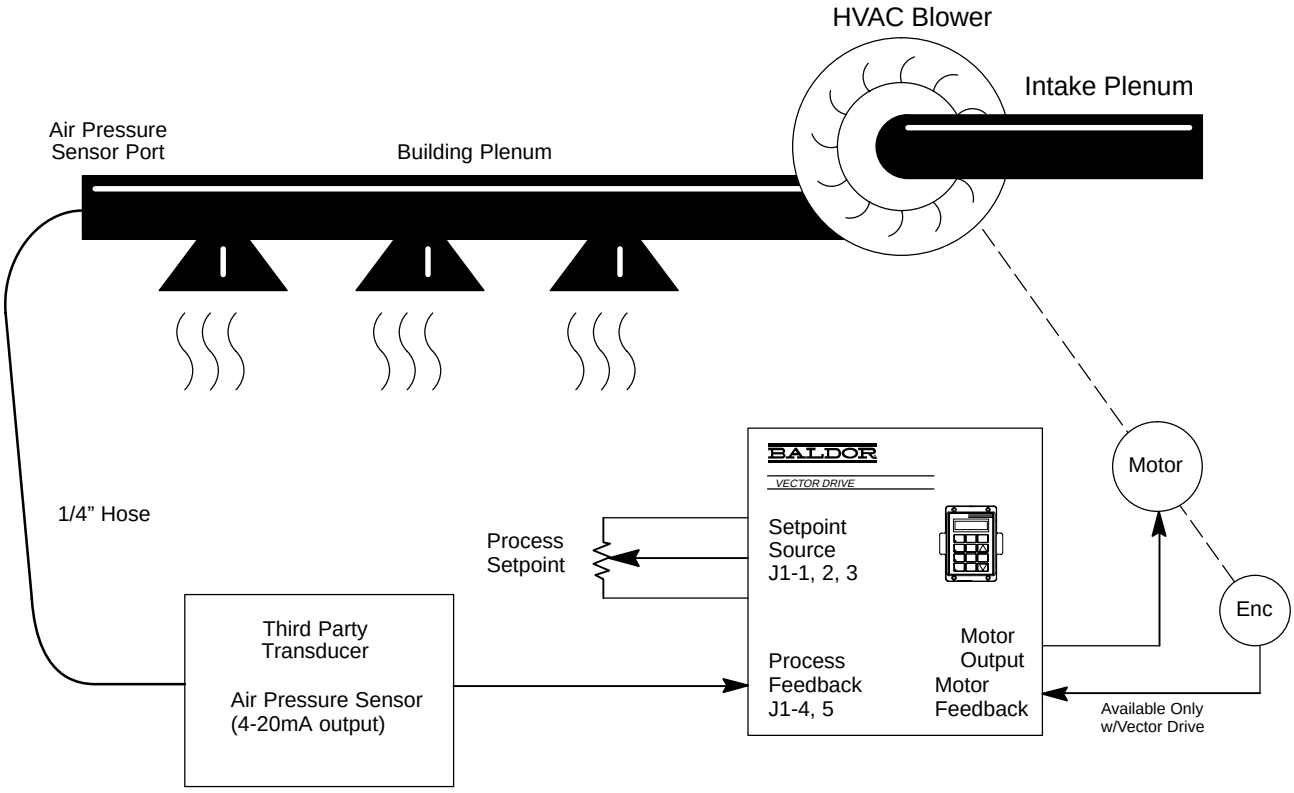

### Example of Two Input, Closed Loop Control

Two input closed loop control compares the value of the setpoint source input with the process feedback. The difference (if any) is defined as “process error”. The “process error” is then used to command the speed of the motor to attempt to force the process feedback to equal the setpoint input. This is the simplest and most common configuration as shown in Figure 1-4.

**Figure 1-4 Two Input, Closed Loop Control**

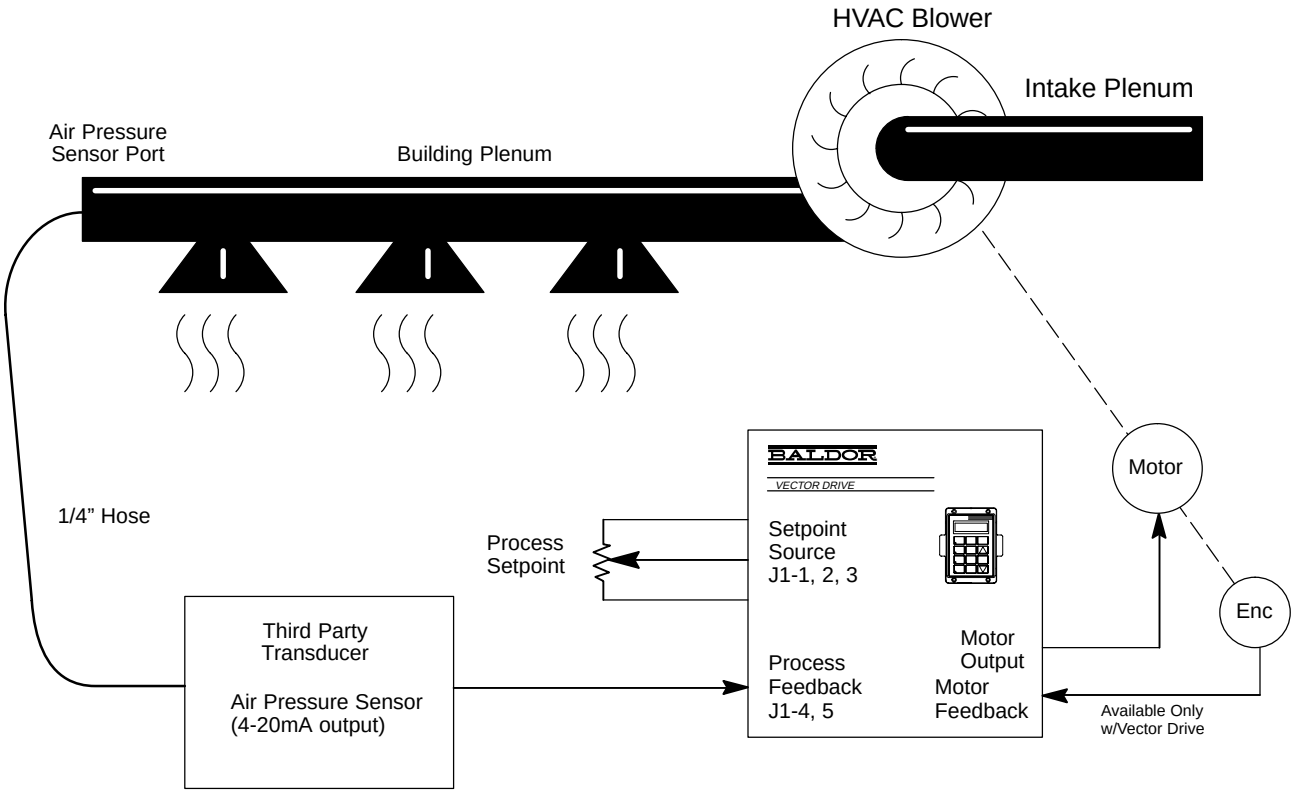


**Input number 1 is the Setpoint potentiometer.** (Setpoint source, J1-1, 2, 3)

**Input number 2 is the Process feedback signal.** (Process feedback, J1-4, 5)

In the above example, we are controlling static duct pressure. The process setpoint potentiometer is commanding the static pressure, the 4-20mA signal is closing the feedback loop, and the motor is running at the speed required to maintain the commanded static pressure.

If a door to the room that the above system was controlling were to be opened, the room pressure would drop, as would the static duct pressure. The process feedback signal would drop, thereby resulting in an error. This process error would then cause the motor to speed up, resulting in a higher static duct pressure.

### Example of Three Input, Closed Loop Control

Three input, closed loop control is the same as two input, but with the addition of a “feedforward” input (constituting the third input). The feedforward input is used for more complex applications that typically have large external disturbances that can affect the process feedback. Refer to Figure 1-5.

**Figure 1-5 Example of Three Input, Closed Loop Control**

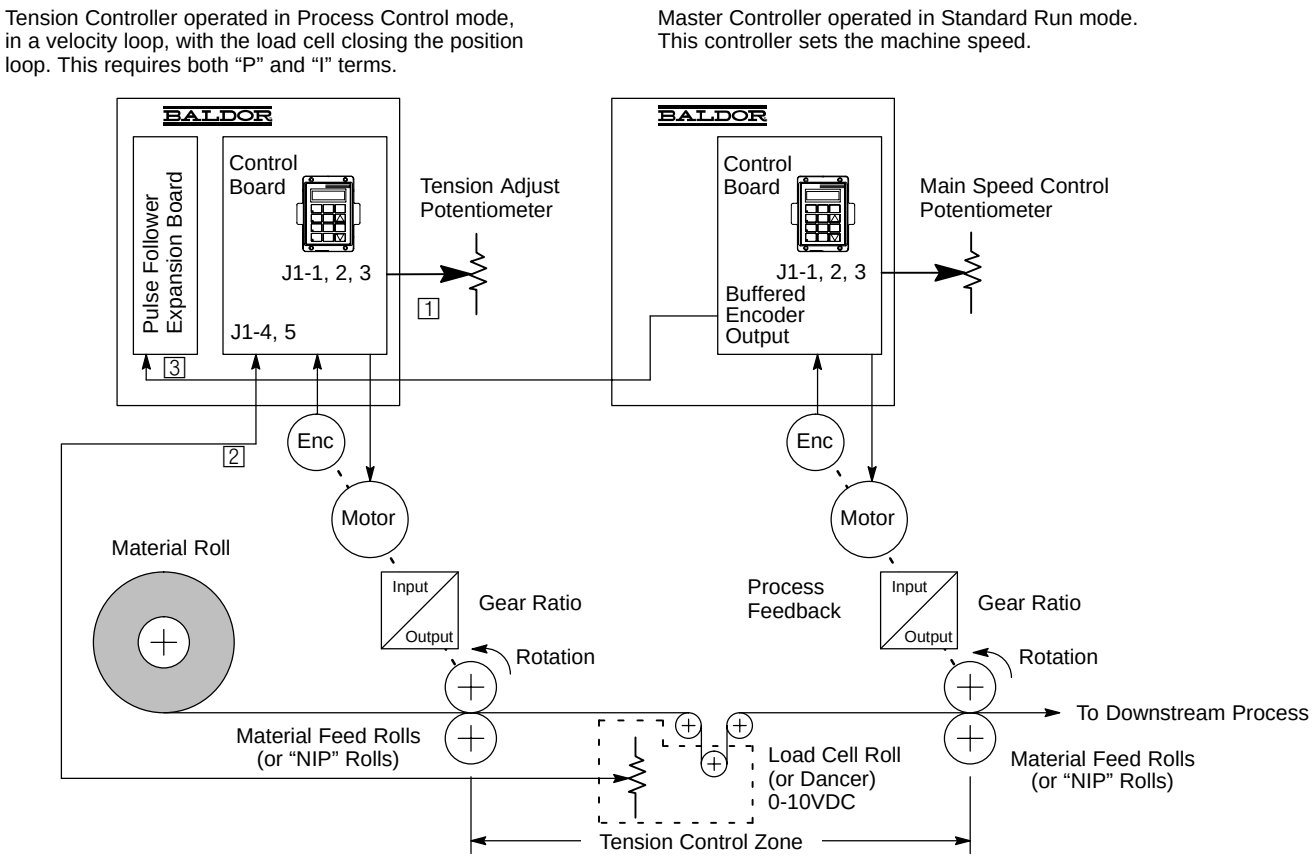


1 **Input number 1 is the Setpoint potentiometer.** (Setpoint source, J1-1, 2, 3)

2 **Input number 2 is the Process feedback signal.** (Process feedback, J1-4, 5)

3 **Input number 3 is the Process feedforward signal.** (Process feedforward, encoder input to the pulse follower expansion board.)

In Figure 1-5, buffered encoder output pulses from the master controller represent the speed of the main process. This signal is used to command the speed of the tension controller to approximately the correct speed. The load cell trims the remainder of speed (up to 5%) to control the web tension. This application uses a tension signal from a load cell sensor to close the feedback loop. A load cell is a device that converts web tension (force in pounds or kilograms) to a proportional electrical signal. The master controller starts and runs the rolls to the desired production speed. As the rolls pull material into the process, the load cell indicates increasing tension. This causes the tension controller to increase the speed to reduce the tension to the setpoint value. Once the master controller is at the production speed, the tension control will hold back on the material to keep the tension at the desired value.

## Explanation of Closed Loop Block Diagrams

A control system is shown in Figure 1-6. The control is represented as individual function blocks. Each block is interconnected by a line with an arrow that indicates the direction of information flow.

**Figure 1-6 Block Diagram of a Closed Loop System**

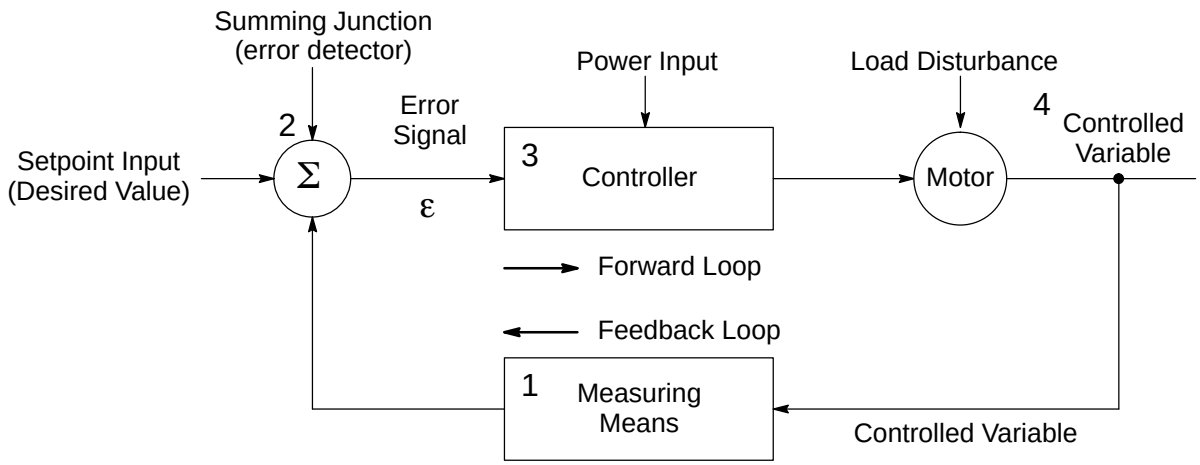


Any closed loop system can be divided into four basic operations:

1. Measurement of the controlled variable. The controlled variable can be water pressure, temperature, velocity, thickness, etc. This measuring means is accomplished using a sensor that converts the variable to an electrical signal that is compatible with the controller inputs, usually voltage or current. This signal now represents the controlled variable (Feedback Input).
2. Determination of the error. The summing junction compares the measured value of the controlled variable (Feedback Input) with the Setpoint Input (desired value) and generates an error signal. The operation is a simple mathematical subtraction operation as follows:

   Error Signal ( $\varepsilon$ ) = Setpoint Input - Feedback Input

   $\varepsilon$ or “epsilon” is the traditional symbol for this signal.
3. The error signal is then used by the controller to change the motor speed or torque.
4. The motor speed or torque is then used to reduce the error signal by driving the final controlled variable, so that the actual value of the controlled variable approaches the Setpoint Input value or desired value. It should be noted that closed loop control systems are error actuated. In other words, an error must be present before the system will try to correct for it.

**Definition of Process Setpoint (Input)**

The process setpoint is the input signal set by the operator. This is the desired output value. This can represent a pressure, flow, speed, torque, level or temperature setpoint. This input is usually set with a potentiometer or other analog reference voltage.

**Definition of Process Feedback (input)**

The process feedback is the input signal that represents the actual measured value from the process sensor. This can represent a pressure, flow, speed, torque, level or temperature sensor. This input is usually a sensor voltage (0-10V) or current (4-20mA) representing the measured value.

**Definition of Process Error (Output)**

Process error is the result of the subtraction of the process setpoint input and process feedback input signals. This operation is shown in Figure 1-7 and is referred to as the summing junction (error detector).

The process error is mathematically defined as:

Error Signal ( $\varepsilon$ ) = Setpoint Input - Feedback Input

**Figure 1-7 Block Diagram of A Closed Loop System**

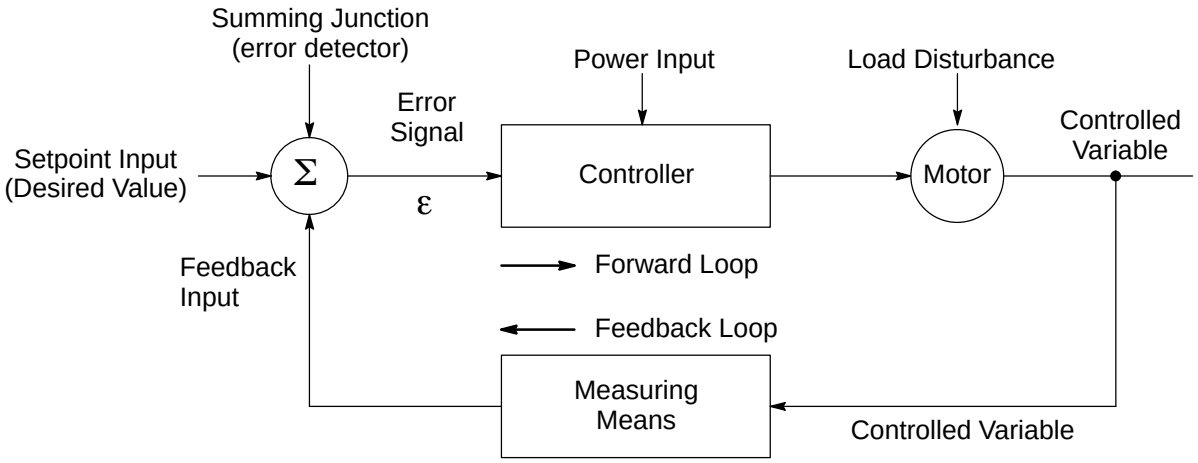

**Definition of "P" (Proportional gain)**

Proportional gain is the amplification that is applied to the process error signal, which will result in a particular controller output. We have stated that the process error signal is the summation of the process setpoint and the process feedback.

Proportional gain is mathematically defined as:

$A_{out} = K_p \varepsilon$

Where;

$A_{out}$ = Controller output

$K_p$ = Proportional gain

$\varepsilon$ = Process error signal = (setpoint - feedback)

What the above really means is simply that the controller's output ($A_{out}$) is equal to the error signal ($\varepsilon$) multiplied by proportional gain ($K_p$).

To assist in defining proportional gain, refer to Figure 1-8.

In Figure 1-8 we see that the amplitude of the output of the controller is dependent on the process error, multiplied by the proportional gain.

For a given amount of error, the greater the proportional gain, the greater the output.

It is also true that, for a given amount of proportional gain, the greater the error, the greater the output.

**Figure 1-8 Block Diagram of A Closed Loop System**

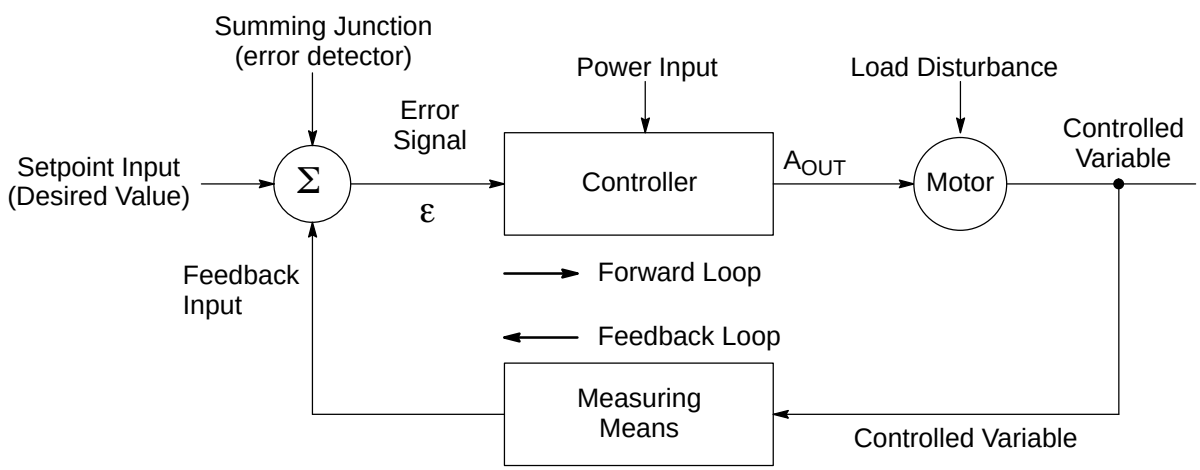

**Definition of "I" (Integral gain)**

Integral gain (like proportional gain) is amplification of the process error signal, but is time dependent. If a steady state error exists for long periods of time, it is known as an offset. Integral gain compensates for this long term error or offset. Generally speaking, if you were to use only proportional control in a process, the controller output would never bring the controlled variable exactly equal to the setpoint. You would always have some small amount of error. This is often called offset. The Integral term senses this long term offset, and corrects the controller output to reduce the effect of offset.

Integral gain is mathematically defined as:

$$A_{out} = K_i \int \varepsilon \, \Delta t$$

Where $A_{out}$ = Controller output

$K_i$ = Integral gain

$\int$ = Integrator symbol

$\varepsilon$ = Process error signal = (setpoint - feedback)

$\Delta t$ = Change in time

This formula states that a given controller output ($A_{out}$) is equal to integral gain ($K_i$), multiplied by the integral ( $\int$ ) of the error ( $\varepsilon$ ), multiplied by the change ($\Delta$) in time (t). What all of this says is simply that in an Integrator loop is used and error is accumulated over time (or integrated), and integral gain is used to reduce long term error. Figure 1-9 shows this process.

**Figure 1-9 Block Diagram of the I Element**

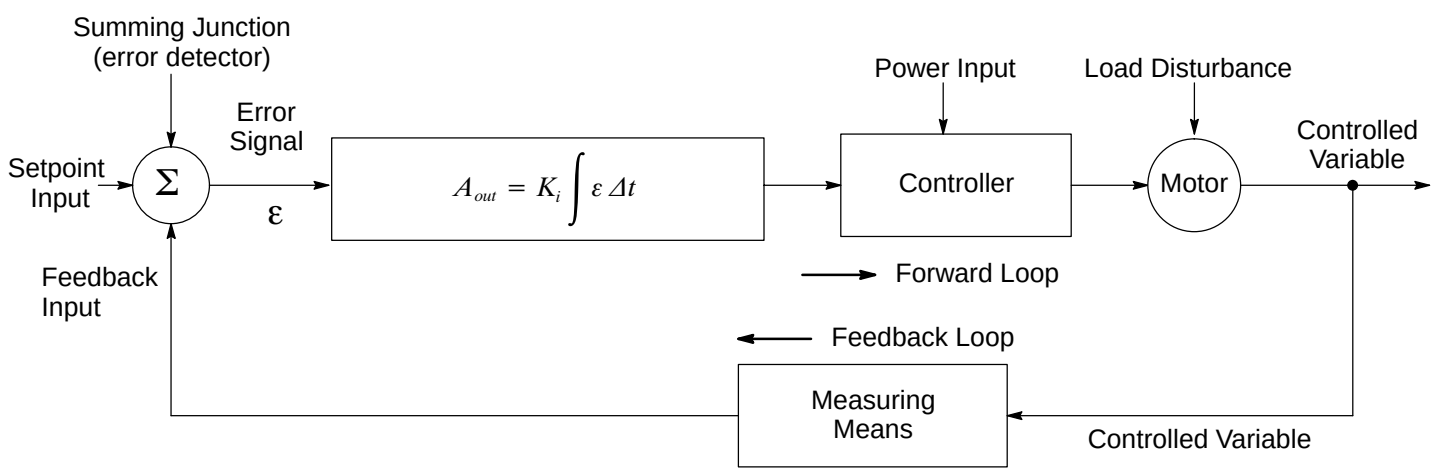

To illustrate the concept of offset, refer to the following waveform. When the process feedback has stabilized, it is not equal to setpoint command. In this case, the difference between the setpoint and the process feedback is the offset.
Please note that the integral gain is set to zero.

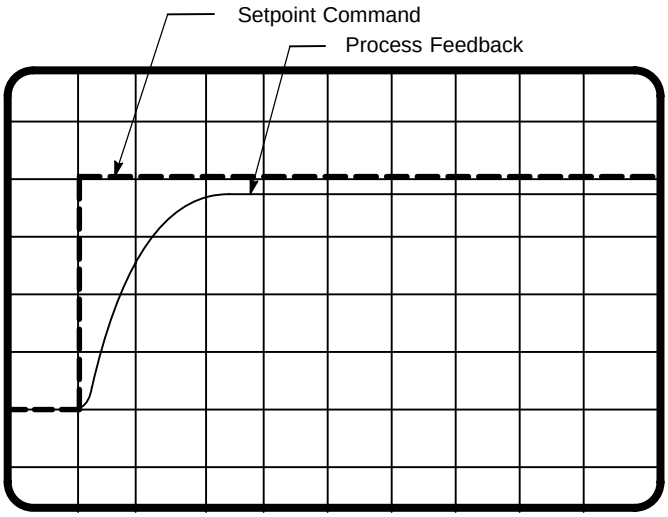


Process Gain Settings:
Proportional gain=25
Integral gain=0.00 Hz

(Oscilloscope set to:
vertical=1 V/ division
horizontal=1.0 sec/division

The next waveform illustrates what happens to the system offset when we apply integral gain. With the addition of integral gain (2.00 Hz), the system offset is reduced to zero. Something else has happened, the process variable (as indicated by process feedback) responds much more quickly than it did in the previous waveform. This is due to the fact that the proportional gain was increased from 25 to 100.

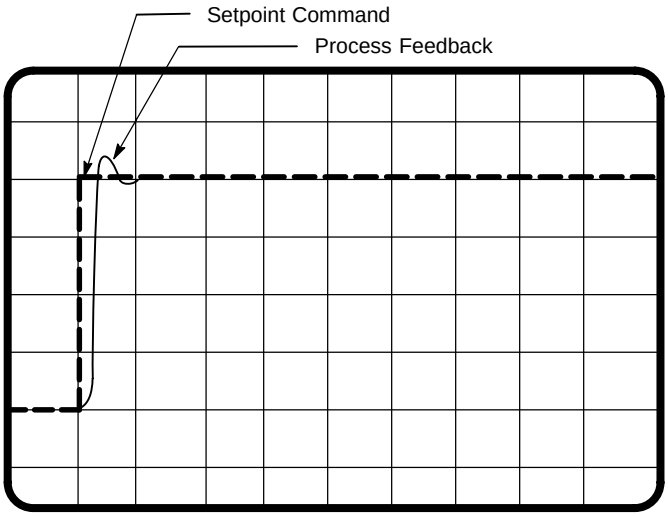


Process Gain Settings:
Proportional gain=100
Integral gain=2.00 Hz

(Oscilloscope set to:
vertical=1 V/ division
horizontal=1.0 sec/division

**Definition of "D" (Differential or Differential gain)**

The Differential element is proportional to the rate of change of the process error. Differential gain is provided to reduce overshoot of the process control during sudden large disturbances. The differential element is only responsive during transient conditions. The differential gain is not active for steady state errors because their rate of change is zero.

Differential gain is mathematically defined as:

$$A_{out} = K_d \frac{\Delta\varepsilon}{\Delta t}$$

Where $A_{out}$ = Controller output

$K_d$ = Differential gain

$\frac{\Delta\varepsilon}{\Delta t}$ = Change in process error signal divided by change in time

This formula states that a given controller output (Aout) is equal to differential gain (Kd) multiplied by the change in process error signal ($\Delta\varepsilon$) divided by change in time ($\Delta t$).

For a large change in the process error in a fixed period of time, the differential term will have a large effect on the controller output. A small change in the process error in a fixed period of time will have less effect on the controller output.

In most applications, the differential gain is rarely used. If it is required, it is then used with caution as it can cause instability. See Figure 1-10.

**Figure 1-10 Block Diagram of Differential Gain**

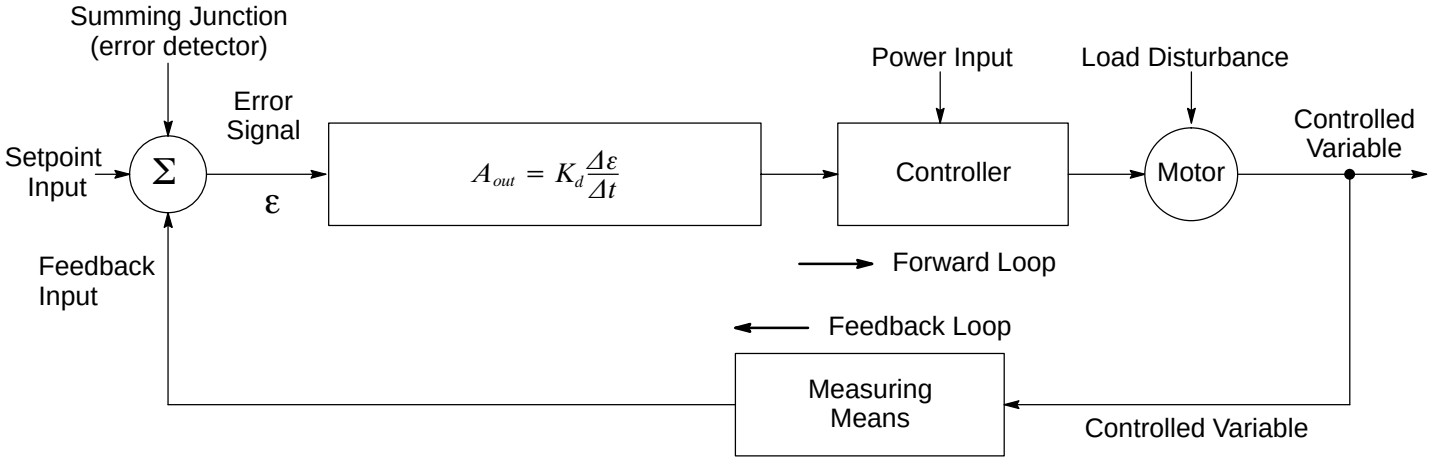

**Definition of "PID" (Proportional, Integral, Differential)**

Proportional, Integral, Differential then, is the summation of all three elements of gain, and can be expressed as follows (see Figure 1-11):

$$A_{out} = K_p\varepsilon + K_i \int \varepsilon \, \Delta t + K_d \frac{\Delta \varepsilon}{\Delta t}$$

Remember that the above formula can be divided into relatively easy to understand individual components that have been previously discussed.

An easy way to remember each of the terms:

- Proportional is a steady state gain, it is always active.
- Integral gain is only active for long term offset errors. For short duration errors, it is not active in the control loop.
- Differential gain is only active for short term, transient errors. For long duration errors, it is not active in the control loop.

**Figure 1-11 Block Diagram PID Loop System**

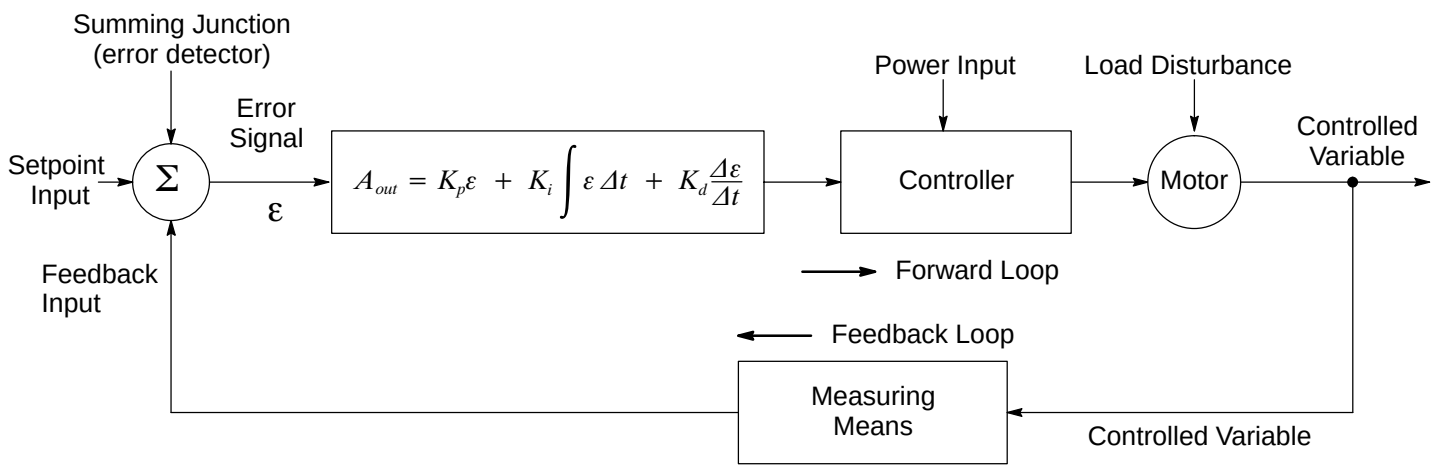

## Application Considerations

To achieve the best possible and consistent performance, the feedback sensor should be scaled within the appropriate range for the motor. The motor should also have a direct effect on the selected feedback device.

An example of an appropriate scaling is a water pressure transducer that supplies a linear voltage in proportion to water pressure. In this example, the pump is rated for 200PSI maximum and the water pressure transducer rated for +10 Volts output with 200PSI input. The water pressure sensor is mounted close to the centrifugal pump that the motor is directly driving. The motor RPM will have a direct effect on the water pressure. Also, the maximum pump pressure that is possible matches the maximum output of the feedback sensor (the water pressure transducer).

An example of a poor feedback selection would be pump similar to the above example. The difference is if the pump is rated for 200PSI maximum and the water pressure transducer is now rated for + 10 Volts output with 1000PSI input. The water pressure transducer is grossly oversized for the motor and pump capability. The performance of this package will be poor, as the effective working voltage range is 0 to 2V instead of 0 to 10V. This will directly affect the accuracy and performance of the system. Under extreme situations, the system will not function at all.

# Section 2
# Input Selection and Installation

## Input Selection

The process input configuration must now be determined. Review the compatibility of the proposed transducers with the available analog inputs or option boards. The recommended configuration is when the transducer output, such as +10VDC, exactly matches the selected input, for example, “+/– 10 Volts” on terminals 4 & 5.

The process control inputs should be selected for either the 2 or 3 input configuration. The three inputs can be programmed for a variety of configurations. Most applications are 2 input configuration, therefore set the Command Select parameter to none. The only restriction is to not allow the process control selections to share the same input. Use the following chart to select the desired inputs. Select one unique hardware input for the Process Feedback parameter and a different hardware input for the Setpoint Command parameter.

**Table 2-1 Process Mode Input Signal Compatibility**

| Setpoint or Feedforward | Feedback | | | | | | |
|---|---|---|---|---|---|---|---|
| | J1-1 & 2 | J1-4 & 5 | 5V EXB [1] | 10V EXB [1] | 4-20mA EXB [1] | 3-15 PSI EXB [2] | DC Tach EXB [3] |
| **J1-1 & 2** | ■ | | | | | | |
| **J1-4 & 5** | | ■ | | | | | |
| **5V EXB [1]** | | | ■ | ■ | ■ | ▨ | |
| **10V EXB [1]** | | | ■ | ■ | ■ | ▨ | |
| **4-20mA EXB [1]** | | | ■ | ■ | ■ | ▨ | |
| **3-15 PSI EXB [2]** | | | ▨ | ▨ | ▨ | ■ | |
| **DC Tach EXB [3]** | | | | | | ▨ | ■ |
| **EXB PULSE FOL [4] [1] [5]** | | | | | | ▨ | |
| **Serial [5] [1] [6]** | | | ▨ | ▨ | ▨ | ▨ | |

[1] Requires expansion board EXB007A01 (High Resolution Analog I/O EXB).

[2] Requires expansion board EXB004A01 (4 Output Relays/3-15 PSI Pneumatic Interface EXB).

[3] Requires expansion board EXB006A01 (DC Tachometer Interface EXB).

[4] Requires expansion board EXB005A01 (Master Pulse Reference/Isolated Pulse Follower EXB).

[5] Used for Feedforward only. Must not be used for Setpoint Source or Feedback.

[6] Requires expansion board EXB001A01 (RS232 Serial Communication EXB). or
Requires expansion board EXB002A01 (RS422/RS485 High Speed Serial Communication EXB).

■ Conflicting inputs. Do not use same input signal multiple times.

▨ Conflicting level 1 or 2 expansion boards. Do not use!

- When using the two input configuration, always set the Command Select parameter to None.
- When using the three input configuration, refer to Table 2-1 and verify that both the Process Feedback and Setpoint Source parameters do not conflict with the Command Select parameter selection.

## Installation

When the process inputs have been identified, connect the control wiring. All external control wiring should be run in a conduit, separate from all other wiring. The use of shielded, twisted pair wiring is recommended for all control wiring. The shield of the control wiring should be connected to the analog ground at the control only. The other end of the shield should be taped to the wire jacket to prevent electrical shorts.

### Analog Command Inputs

Two analog inputs are available on the control board terminal block. The Level 1 Input block, Command Select parameter, Potentiometer selection is available on terminals 1 & 2. In the Process Mode, the Potentiometer parameter selection will accept a positive or negative voltage. The +/– 10 Volts selection is available on terminals 4 & 5. The 4 to 20mA selection is available on terminals 4 & 5, with the proper control board jumper setting.

The analog input on terminal 4 & 5 accepts a differential +/– 10 Volts. The input is buffered to provide 40 db common mode isolation with up to +/– 15 Volts common mode relative to the control board common.

### Specific Process Mode Outputs

**Process Mode Only, Analog Monitoring Outputs**

| Name | Description |
|---|---|
| Process FDBK | Process Feedback scaled input. Useful for observing or tuning the process control loop. |
| Setpoint CMD | Setpoint Command scaled input. Useful for observing or tuning the process control loop. |
| Speed Command | Commanded Motor Speed. Useful for observing or tuning the output of the control loop. |

**Process Mode Only, Opto Isolated Outputs**

| Name | Description |
|---|---|
| Process Error | OPENS when the Process Feedback is greater than the specified tolerance band. The width of the tolerance band is adjusted by the Level 2 Process Control block Process ERR TOL parameter value.<br>CLOSED when the Process Feedback is within the specified tolerance band. |

**Figure 3-1 Process Mode Connection Diagram (18H, 20H, 22H and 23H only)**

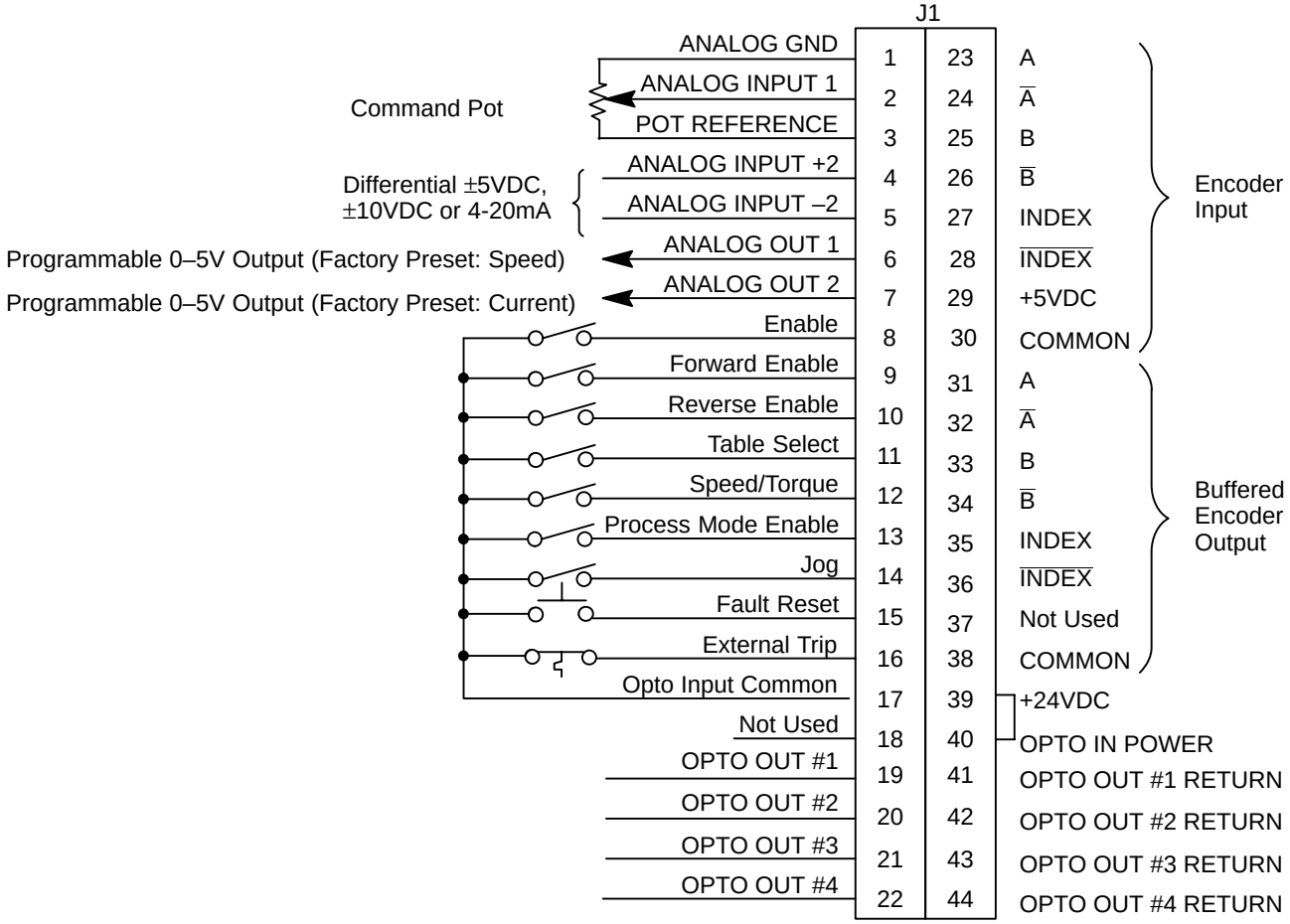


Terminal Tightening Torque = 7 Lb-in (0.8 Nm).

| | |
|---|---|
| J1-8 | OPEN disables the control & motor coasts to a stop.<br>CLOSED allows current to flow in the motor and produce torque. |
| J1-9 | OPEN motor decels to stop (depending on Keypad Stop mode parameter setting).<br>CLOSED operates the motor in the Forward direction (with J1-10 open). |
| J1-10 | OPEN motor decels to stop depending on Keypad Stop mode parameter setting.<br>CLOSED operates motor in the Reverse direction (with J1-9 open). |
| J1-11 | OPEN = TABLE 0, CLOSED = TABLE 1. |
| J1-12 | OPEN, the control is in velocity mode. CLOSED, the control is in torque mode. |
| J1-13 | CLOSED to enable the Process Mode. |
| J1-14 | CLOSED places control in JOG mode. The control will only JOG in the forward direction. |
| J1-15 | OPEN to run. CLOSED to reset a fault condition. |
| J1-16 | OPEN causes an external trip to be received by control. The control will disable and display external trip when programmed “ON”. When this occurs, the motor stop command is issued, drive operation is terminated and an external trip fault is displayed on the keypad display (also logged into the fault log).<br>If J1-16 is connected, you must set Level 2 Protection block, External Trip to “ON”. |
| J1-39 & 40 | Jumper as shown to power the Opto Outputs from the internal +24VDC supply. |

## Pre-Operation Checklist

Refer to the Installation and Operating manual for the control being used. Perform the pre-operation checklist and power-up procedures as stated on that manual.

Note: When the control is operating, measure the transducer input signal. Verify if the signal increases or decreases with increasing motor speed. This is needed for tuning the system in Section 4 of this manual.

# Section 3
# Process Mode Parameters

## Level 1 Parameters

### Accel/Decel and S-Curve

| Block Title | Parameter | Description |
|---|---|---|
| ACCEL/DECEL RATE | Accel Time #1,2 | Accel time is the number of seconds required for the motor to increase at a linear rate from 0 RPM to the RPM specified in the “Max Output Speed” parameter in the Level 2 Output Limits block. In the process mode, this will only affect a speed command that is entered in the Level 1 Input block, Command Select parameter value. The accel time will not affect the Process Feedback or Setpoint Command inputs. |
| | Decel Time #1,2 | Decel time is the number of seconds required for the motor to decrease at a linear rate from the speed specified in the “Max Output Speed” parameter to 0 RPM. In the process mode, this will only affect a speed command that is entered in the Level 1 Input block, Command Select parameter value. The decel time will not affect the Process Feedback or Setpoint Command inputs. |
| | S-Curve #1,2 | S-Curve is a percentage of the total Accel and Decel time and provides smooth starts and stops. Half of programmed S-Curve % applies to Accel and half to Decel ramps. 0% represents no “S” and 100% represents full “S” with no linear segment. In the process mode, this will only affect a speed command that is entered in the Level 1 Input block, Command Select parameter value. The accel time will not affect the Process Feedback or Setpoint Command inputs. An example of a 40% S-Curve is shown in Figure 4-1.<br>Note: Accel #1, Decel #1 and S-Curve #1 are associated together. Likewise, Accel #2, Decel #2 and S-Curve #2 are associated together. These associations can be used to control any Preset Speed or External Speed command.<br>Note: If drive faults occur during rapid Accel or Decel, selecting an S-curve may eliminate the faults. |

**Figure 4-1 40% S-Curve Example**

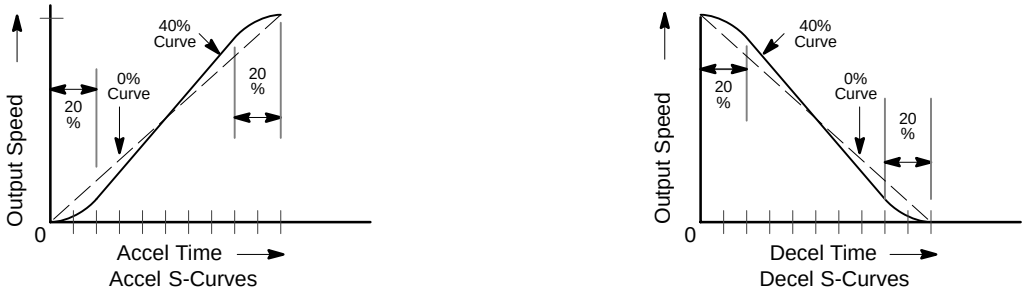

**Level 1 Parameters** Continued

**JOG Settings**

| Block Title | Parameter | Description |
|---|---|---|
| JOG SETTINGS | Jog Speed | Jog Speed is the programmed speed used during for jog. Jog can be initiated from the keypad or terminal strip. At the Keypad, press the JOG key then press and hold the direction (FWD or REV). For Standard Run mode, close the JOG input (J1-12) at the terminal strip then close and maintain the direction input (J1-9 or J1-10).<br><br>Process Control mode operation is different. If the terminal strip process mode Enable input (J1-13) is closed, pressing the Keypad JOG key (or closing J1-14) will cause the drive to move in the direction of the error (without pressing FWD or REV). |
| | Jog Accel Time | Jog Accel Time changes the Accel Time to a new preset value for jog mode. In the process mode, this will only affect a speed command that is entered into the Command Select input. The accel time will not affect the Process Feedback or Setpoint Command inputs. |
| | Jog Decel Time | Jog Decel Time changes the Decel Time to a new preset value for jog mode. In the process mode, this will only affect a speed command that is entered into the Command Select input. The decel time will not affect the Process Feedback or Setpoint Command inputs. |
| | Jog S-Curve | Jog S-Curve changes the S-Curve to a new preset value for jog mode. In the process mode, this will only affect a speed command that is entered into the Command Select input. The accel time will not affect the Process Feedback or Setpoint Command inputs. |

**Input**

| Block Title | Parameter | Description |
|---|---|---|
| INPUT | Operating Mode | Various operating modes are available. This parameter will be set to process mode to select the process mode. |
| | Command Select | Selects the external speed or torque reference to be used. In the process mode, this is the Feedforward input parameter. |

**Level 1 Parameters** Continued

**Output**

| Block Title | Parameter | Description |
|---|---|---|
| OUTPUT | OPTO OUTPUT #1 – #4 | Four optically isolated digital outputs that have two operating states, logical High or Low. Each output may be configured independently. The opto outputs are useful in applications where a higher level controller is monitoring the operation of the control to make process decisions based on the operating status of the control.<br>In addition to the normal opto outputs, the process mode Software adds Process Error as a selection. |
| | Analog Output #1 and #2 | Two 0-5VDC linear analog outputs. Each output may be configured independently. The analog outputs are useful for monitoring current operating conditions in some higher level controller or to drive remote analog meters for operator reference. In addition to the normal selections, Process Feedback and Process Command are available as a selection. |

**Vector Control**

| Block Title | Parameter | Description |
|---|---|---|
| VECTOR CONTROL | Position Gain | Sets the position loop proportional gain. This parameter is used for setting the position gain when using the pulse follower expansion board in an absolute position mode or when using the orient command in the Bipolar Mode. This parameter should always be set to 0 when using process mode. |

## Level 2 Parameters

### Process Control

| Block Title | Parameter | Description |
|---|---|---|
| PROCESS CONTROL | Process Feedback | Sets the type of signal used for the process feedback signal. The available selection includes: Potentiometer, +/- 10VDC, +/- 5VDC, 4-20mA when using the standard control without optional expansion boards. The selection with optional expansion boards includes: +/-10VDC or 4-20mA with the high resolution analog expansion board, 3-15PSI with the 3-15PSI expansion board, or the Tachometer expansion board. A selection of none disables this part of the control loop. |
| | Process Inverse | Causes the process feedback signal to be inverted with a unipolar input. Used with reverse acting processes that use a unipolar signal such as 4-20mA. If “ON”, 20mA will decrease motor speed and 4mA will increase motor speed. This feature is only available for the Potentiometer, 3-15PSI and 4-20mA process feedback selections. This parameter will have no effect on any of the other input selections. This parameter can be turned ON or OFF. |
| | Setpoint Source | Sets the source input signal type to which the process feedback will be compared. If “Setpoint CMD” is selected, the value entered into the Setpoint Command parameter is used. The available choices are: Potentiometer, +/- 10VDC, +/- 5 VDC, 4-20mA, or Setpoint Command when using the standard control without optional expansion boards. The selection with optional expansion boards includes: +/-10VDC or 4-20mA with the high resolution analog expansion board, 3-15PSI with the 3-15PSI expansion board, or the Tachometer expansion board. A selection of none disables this part of the control loop. |
| | Setpoint Command | Sets the value of the setpoint the control will try to maintain by adjusting motor speed. This parameter is only used when the Setpoint Source parameter is set to Setpoint Command. This parameter is scaled as a percentage of the selected process feedback input. |
| | Set PT ADJ Limit | Sets the maximum speed or torque correction value to be applied to the motor (in response to the maximum feedback setpoint error). For example, if the max motor speed is 1750 RPM, the setpoint feedback error is 100% and the setpoint adjustment limit is 10%, the maximum speed the motor will run in response to the setpoint feedback error is ±175 RPM. If at the process setpoint, the motor speed is 1500 RPM, the maximum speed adj limit is then 1325 to 1675 RPM.<br>The parameter is programmed as a percentage of the MAX Motor SPD or PK CUR Limit parameters. For 2 input configuration systems, this parameter should be set to 100%. This will allow the process control loop to have complete control over the motor. |
| | Process ERR TOL | Sets the width of the band above and below the Setpoint Command value with which the process feedback input is compared. The result is that if the process input is within the comparison band, the PROCESS ERROR opto-output will be on. This is useful for indicating an out of control process or defective transducer. |

**Level 2 Parameters** Continued

**Process Control** Continued

| Block Title | Parameter | Description |
|---|---|---|
| PROCESS CONTROL<br><br>Continued | Process PROP Gain | Sets the PID loop proportional gain. This determines how much adjustment to motor speed (within the Set PT ADJ Limit) is made to move the analog input to the setpoint. Increasing this value increases the rate of speed or amount of torque to the motor for a given process error. |
| | Process INT Gain | Sets the PID loop integral gain. This determines how quickly the motor speed is adjusted to correct long term error. Increasing this parameter increases how fast the control can adjust the motor speed or torque to reduce any steady state process error. |
| | Process DIFF Gain | Sets the PID loop differential gain. This determines how much adjustment to motor speed (within the Set PT ADJ Limit) is made for transient error. |
| | Follow I:O Ratio | Only used if an optional Master Pulse Reference/Isolated Pulse Follower expansion board is installed. Sets the ratio of the Master to the Follower in Master/Follower configurations. For example, the master encoder you want to follow is a 1024 count encoder. The follower motor you wish to control also has a 1024 count encoder on it. If you wish the follower to run twice the speed of the master, a 1:2 ratio is entered. Fractional ratios such as 0.5:1 are entered as 1:2. Master:Follower ratio limits are (1-65,535) : (1-20). |
| | Follow I:O OUT | This parameter is used only when Serial Communications is used to operate the control. Also, it is only used if an optional Master Pulse Reference/Isolated Pulse Follower expansion board is installed. This parameter represents the Follower portion of the ratio. The master portion of the ratio is set in the Follow I:O Ratio parameter. |
| | Master Encoder | Only used if an optional Master Pulse Reference/Isolated Pulse Follower expansion board is installed. Defines the number of pulses per revolution of the master encoder. Only used for follower drives. |

### Parameter Ranges

| Level 1 Blocks | | | | | |
|---|---|---|---|---|---|
| **Block Title** | **Parameter** | P# | **Adjustable Range** | **Factory** | **User Setting** |
| INPUT | OPERATING MODE | 1401 | KEYPAD<br>STANDARD RUN<br>15SPD<br>SERIAL<br>BIPOLAR<br>PROCESS MODE | KEYPAD | |
| | COMMAND SELECT | 1402 | POTENTIOMETER<br>+/-10 VOLTS<br>+/-5 VOLTS<br>4-20 mA<br>10V W/EXT CL<br>10V W/TORQ FF<br>EXB PULSE FOL<br>5V EXB<br>10 VOLT EXB<br>4-20mA EXB<br>3-15 PSI EXB<br>TACHOMETER EXB<br>SERIAL<br>NONE | +/-10<br>VOLTS | |
| VECTOR CONTROL | POSITION GAIN | 1609 | 0-9999 | CALC | |

| Level 2 Blocks | | | | | |
|---|---|---|---|---|---|
| **Block Title** | **Parameter** | P# | **Adjustable Range** | **Factory** | **User Setting** |
| PROCESS CONTROL | PROCESS FEEDBACK | 2701 | POTENTIOMETER<br>+/-10VOLTS<br>+/-5 VOLTS<br>4-20mA<br>5V EXB<br>10V EXB<br>4-20mA EXB<br>3-15 PSI EXB<br>TACHOMETER EXB<br>NONE | NONE | |
| | PROCESS INVERSE | 2702 | ON, OFF | OFF | |
| | SETPOINT SOURCE | 2703 | POTENTIOMETER<br>+/-10VOLTS<br>+/-5 VOLTS<br>4-20mA<br>5V EXB<br>10V EXB<br>4-20mA EXB<br>3-15 PSI EXB<br>TACHOMETER EXB<br>NONE<br>SETPOINT CMD | SETPOINT<br>CMD | |
| | SETPOINT COMMAND | 2704 | –100% to +100% | 0.0 % | |
| | SET PT ADJ LIMIT | 2705 | 0-100% | 10.0 % | |
| | PROCESS ERR TOL | 2706 | 0-100% | 10 % | |
| | PROCESS PROP GAIN | 2707 | 0-2000 | 0 | |
| | PROCESS INT GAIN | 2708 | 0-9.99 HZ | 0.00 HZ | |
| | PROCESS DIFF GAIN | 2709 | 0-1000 | 0 | |
| | FOLLOW I:O RATIO | 2710 | 1-65535:1-65535 | 1:1 | |
| | MASTER ENCODER | 2712 | 50-65535 | 1024 PPR | |

# Section 4
# Manual Tuning

## Manual Tuning With A Multimeter

Before the control system can be tuned, the control must be properly connected and ready for use as described in Section 2 pre-operation checklist. The control must not display errors, must be autotuned and must operate correctly in the keypad mode.

1. Set the Level 1 Input block, Operating Mode parameter to Process Mode.
2. Set the Level 2 Process Control block, Process Inverse parameter as required. (To invert or non-invert the process feedback signal).
3. Set the Process INT Gain to 0.
4. Set the Process DIFF Gain to 0.
5. Set the Process PROP Gain to 100.
6. Enable and run the control with a constant load. Adjust the setpoint source to 1/2 of the maximum value. For a potentiometer, adjust the potentiometer to 1/2 of its rotation.
7. Measure the feedback voltage.
8. Increase the Process PROP Gain in increments of 100 until the process feedback begins to increase. The target is to have the process feedback equal the setpoint (reach 1/2 of its total full scale range). If oscillations occur, then slightly reduce the Process PROP Gain and go to the next step.
9. Change the setpoint source value by approximately 20% and observe the process feedback signal (or the motor if convenient).
10. If the response was stable, then increase the Process PROP Gain in increments of 100 until the process feedback oscillates slightly when performing step 8. Then decrease the Process PROP Gain slightly until the process feedback is stable. This parameter is now set.

Note: While running at a constant load, the Process Feedback value will not exactly equal the Setpoint Source value. This will be tuned next.

11. Enable and run the control with a constant load. Set the setpoint source value to 1/2 of the maximum value. Set the Process INT Gain to a small value, such as 0.10 Hz. Observe the process feedback signal and note the setpoint source value. The process feedback signal should slowly increase over a period of several seconds until it exactly achieves the setpoint source value. Increase the Process INT Gain to reduce the time that it takes to eliminate the steady state error. If the system begins to oscillate or become unstable, then reduce the Process INT Gain. Too much Process INT Gain will easily cause almost any system to become unstable. Use the smallest gain value to achieve proper operation.
12. If the system is still unstable or unresponsive, then review the motor and control sizing to the load. Also, check to see if the MAX Output Speed is high enough. Observe the keypad display motor information to see if the motor reaches its limits during operation. If it does, then the solution is to review why its limits are being exceeded. In some cases, the MAX Output Speed may be the limiting factor or possibly the motor and control package are too small for the application.

## Manual Tuning With An Oscilloscope

### Process Controller Gains

The Process PROP Gain is factory preset to 0. This gain must be adjusted to suit the application. Increasing the Process PROP Gain will result in faster response, excessive Process PROP Gain will cause overshoot and ringing. Decreasing Process PROP Gain will cause slower response and decrease overshoot and ringing caused by excessive Process PROP Gain. If Process PROP Gain & Process INT Gain are set too close together an overshoot condition can also occur.

The Process INT Gain parameter value can be set at any value from 0 to 9.99 Hz. Setting the Process INT Gain to 0 removes integral compensation, resulting in a proportional rate loop. This selection is ideal for systems where overshoot must be avoided and substantial stiffness" (ability of the drive to maintain commanded speed despite torque loads) isn't required. Increasing values of Process INT Gain increase the low frequency gain and stiffness of the drive, an excessive Process INT Gain setting will cause overshoot for transient speed commands and may lead to oscillation. Typical setting is 1 to 4 Hz.

1. Set Process INT Gain to 0 (removes integral gain).
2. Increase the Process PROP Gain setting until an adequate response to step setpoint commands is attained.
3. Increase Process INT Gain setting to increase the stiffness of the drive.

It is a good idea to monitor the Process Feedback step response with a strip chart recorder or storage oscilloscope. The first channel is connected to J1-6 and J1-1 (GND) with Analog #1 set to "Setpoint CMD". The second channel is connected to J1-7 and J1-1 (GND) with Analog Out #2 set to "Process Feedback".

Figures 4-1 through 4-4 illustrate what the Process Feedback response would look like on an oscilloscope for various gain settings. The waveforms show analog output J1-6 with "Setpoint CMD" and J1-7 with "Process Feedback" selected. These waveforms show the response during a stepped setpoint command from zero to 4/5 full scale.

Figure 4-1 shows the optimum response. (Process PROP Gain = 100 and integral gain = 2.00Hz).

**Figure 4-1**

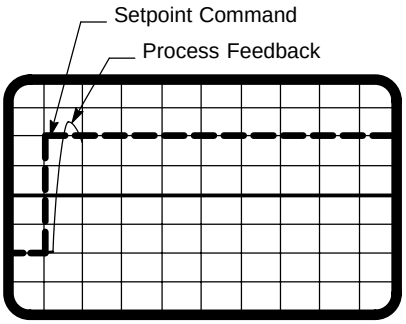


Process PROP Gain = 100 and integral gain = 2.00Hz

(Oscilloscope set to vertical= 1V/division, horizontal = 1.0 sec/division).

In Figure 4-2, the integral gain is set too high (2.00Hz) for the value of proportional gain (10). The result is an excessive overshoot and ringing. Therefore, raise the Process PROP Gain or decrease the Process INT Gain.

**Figure 4-2**

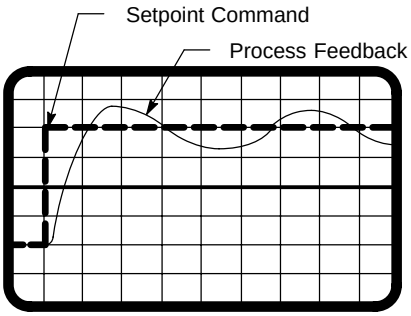


Process PROP Gain = 10 and integral gain = 2.00Hz

(Oscilloscope set to vertical= 1V/division, horizontal = 1.0 sec/division).

Figure 4-3 shows the response of a proportional rate loop with the integral gain set to 0Hz. However, the value of proportional gain is too low.

**Figure 4-3**

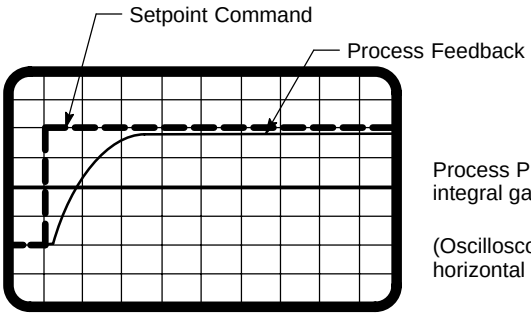


Process PROP Gain = 25 and integral gain = 0.00Hz

(Oscilloscope set to vertical= 1V/division, horizontal = 1.0 sec/division).

Figure 4-4 shows excessive proportional gain. Notice the ringing in the process feedback response.

**Figure 4-4**

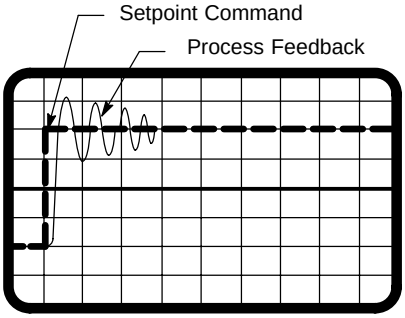


Process PROP Gain = 500 and integral gain = 2.00Hz

(Oscilloscope set to vertical= 1V/division, horizontal = 1.0 sec/division).

# Section 5
# Troubleshooting

| Symptom | Possible Cause and Solution |
|---|---|
| The control is enabled but the motor does not rotate. The motor will rotate when using the keypad. The process feedback is not equal to the setpoint source value. | 1 . Is the process mode Enable input closed? This is terminal J1-13.<br>2. Is the Process PROP Gain parameter set to a value other than zero? Increase & observe response.<br>3. Are the forward and reverse inputs (J1-9, 10) closed? If not, close them.<br>4. If only one direction is allowed for motor rotation, try changing the process feedback polarity. For example, if using the control board analog input on terminals 4 & 5, swap the wires. If using the potentiometer input, change the process feedback inverse parameter.<br>5. Is the control in local mode? Change to remote mode. |
| Upon enabling the control, while increasing the process proportional gain, the process feedback is increasing in error from the setpoint command value. The process integral gain was set to 0. | 1. The process feedback polarity is backwards. Try changing the process feedback polarity. For example, if using the control board analog input on terminals 4 & 5, swap the wires. If using the potentiometer input, change the process feedback inverse parameter. |
| The selected Setpoint Source is not functioning. | 1 . Is the output of the device functional? Measure with the appropriate test equipment.<br>2. Is the setpoint source programmed to recognize the input signal connections? |
| The system has operated properly for some time. Suddenly, the motor goes to maximum speed or torque. The process feedback is not equal to the setpoint source value. | 1 . Is the output of the feedback transducer functional? Measure with the appropriate test equipment.<br>2. Is the motor still properly coupled to the load? Check for broken pump couplings, belts, etc. |

## Example Application #1

### Constant Pressure Water Pump System

The first example application is a simple constant water pressure system. As shown in Figure A-1, the motor is connected to the pump. The output of the pump flows out through the pipe to the process that requires the constant pressure. A pressure transducer monitors the water pressure and sends a 0 to 10V signal to the Baldor Control. The Baldor Control adjusts the speed of the motor to keep the pressure transducer signal constant. The 0 to 10V signal must be linear and proportional to the water pressure. A potentiometer is used by the operator to set the required pressure.

**Figure A-1 System Diagram** (Also used with inverters)

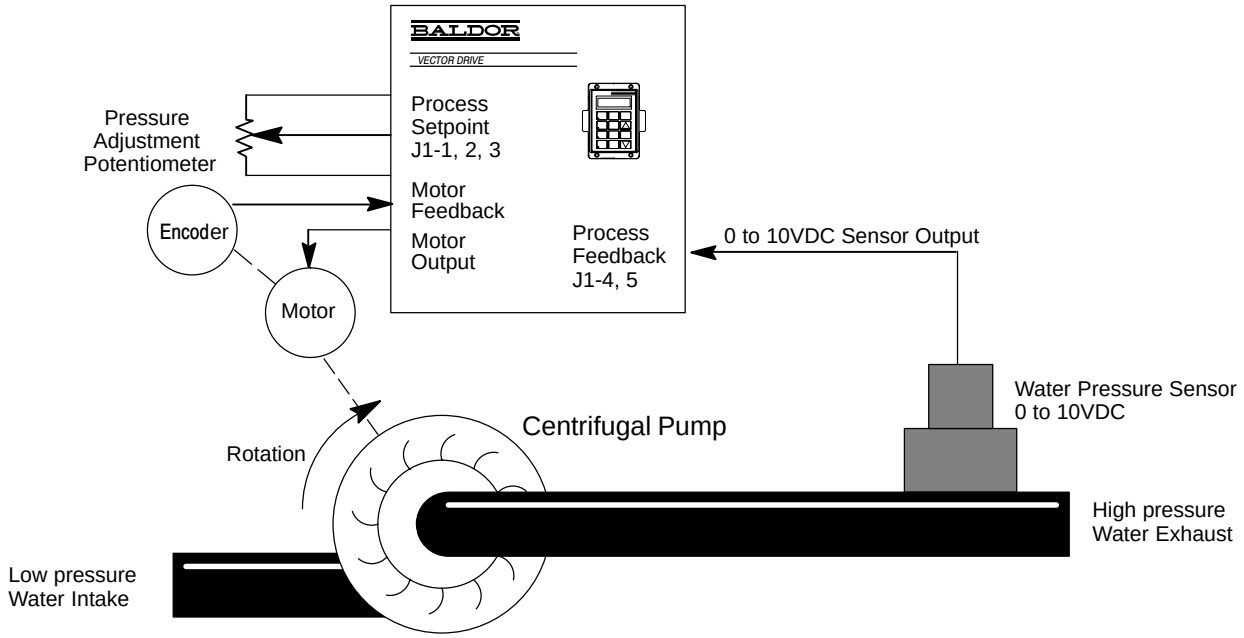

**Figure A-2 Example Pump Control Wiring**

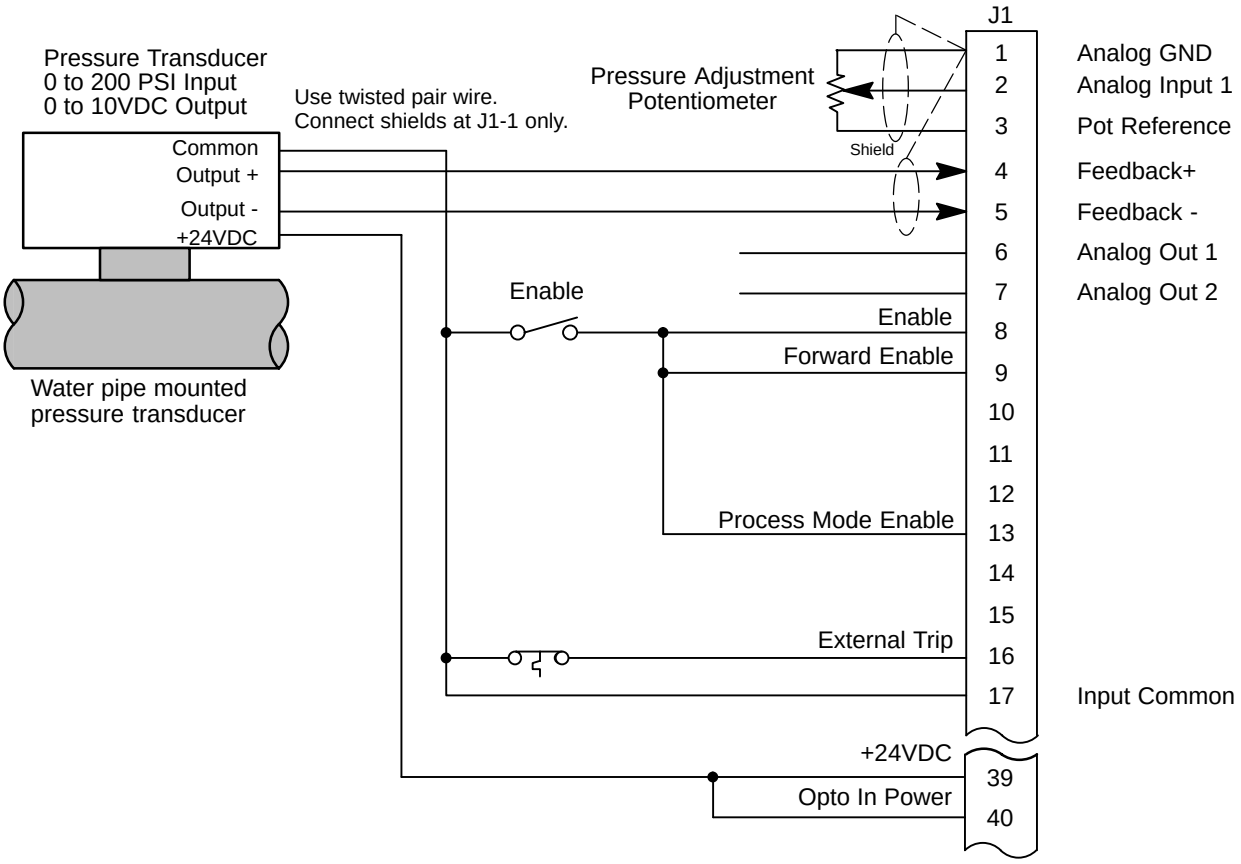


**Pump Example Start Up**

The process mode configuration has been selected and wired as shown in Figure A-2. The following is an example start up procedure.

1. The motor and control must be autotuned and be able to run in the keypad mode before attempting operation in the process mode. For initial start-up, follow the pre-operation checklist in Section 2 of this manual.
2. The direction of motor rotation (when FWD is pressed at the keypad) must be proper to produce water pressure. If the motor shaft rotation is backwards, then swap the encoder wires at J1-23 & 24 AND change the Level 1 Vector Control block, Feedback Align parameter to the opposite value.
3. The Operating Mode parameter is set to process mode. This configures the opto inputs on the J1 connector for the process mode.
4. The Command Select parameter is set to none. This puts the control into a 2 input type of system. This is very important for proper operation.
5. The Process Feedback parameter is set to ± 10 VOLTS. Selects the terminals J1-4, 5 for the process feedback input.
6. The Process Inverse is set to OFF and is not used for this application.
7. The Setpoint Source is set to potentiometer. This selects the terminals J1-1, 2 for the setpoint command input from the pressure adjustment potentiometer.
8. The Setpoint Command is set 0.00% and is not used for this application.
9. The Set PT ADJ Limit is set for 100%. This will allow the process mode to adjust the speed of the motor up to the Max Output Speed parameter value.

10. The Process ERR TOL is set to the factory preset 10%.
    This is not used for this application.
11. The Process DIFF Gain is set to the factory preset 0 as a starting point.
12. The Process INT Gain is set to the factory preset 0 as a starting point.
13. The Process PROP Gain is set to 100 as a starting point.
14. The Follower I:O ratio is set to the factory preset 1:1. This is not used for this application.
15. The master encoder is set to the factory preset 1024 and is not used for this application.
16. Set the pressure adjustment potentiometer to 1/5 full scale or 2VDC at J1-1, 2.
17. Close the Enable switch to enable the control in the remote mode. This can be confirmed by observing the “REM” on the keypad display. As wired, the motor can only rotate in the forward rotation direction. The motor will start to rotate in the forward direction. (If the motor does not begin to rotate, the process feedback may be reversed. Swap the wires at J1-4 and J1-5.)
18. Observe the motor RPM on the keypad display or if using a DC meter, observe the pressure transducer voltage at J1-4, 5.
19. Set the pressure adjustment potentiometer to its minimum setting or approximately 0VDC at J1-1, 2.
20. Then quickly set the pressure adjustment potentiometer to 1/5 of full scale or approximately 2VDC at J1-1, 2. This generates a “step” command. At the same time, observe the motor RPM on the keypad display or using a DC meter, observe the pressure transducer voltage at J1-4, 5.
21. Observe the motor RPM on the keypad display or, if using a DC meter, observe the pressure transducer voltage at J1-4, 5. If it was sluggish then increase the Process PROP Gain from 100 to 200. Perform steps 18, 19 and 20 again but increase the Process PROP Gain additionally another 100 to 300 and so on. When the readings become unstable or cause the motor to vibrate. Then decrease the Process PROP Gain until the readings become smooth or stable again. This is the largest gain the pump can tolerate.

Note: Most pumps resonate at lower speeds. Therefore, tune at these speeds.

22. The process feedback signal will not exactly equal the setpoint command with only the Process PROP Gain adjusted. This steady state error will be adjusted using the Process INT Gain.
23. The Process INT Gain parameter is set at 0.10Hz as a starting point.
24. Set the pressure adjustment potentiometer to its minimum setting or 0VDC at J1-1, 2.
25. Then quickly set the pressure adjustment potentiometer to 1/5 full scale or approximately 2VDC at J1-1, 2.
26. Using a DC meter, observe the pressure transducer voltage at J1-4, 5. The pressure transducer voltage at J1-4, 5 will slowly achieve as close to 2VDC as possible.
27. If it was too sluggish, increase the Process INT Gain from 0.10Hz to 0.20Hz. Perform steps 24, 25 and 26 again, but increase the Process INT Gain additionally another 0.10Hz, to 0.30Hz and so on. Continue until the readings become unstable or cause the motor to vibrate. Then decrease the Process INT Gain until the readings become smooth or stable again. For some pumps, the Process PROP Gain may be decreased considerably and the Process INT Gain increased to compensate.

## Example Application #2

### Rotary Cut-to-Length Operation With Speed Trim

This example is considerably more advanced than the first. The application requires precise speed following of the master control. The follower control is equipped with a Master Pulse Follower expansion board to precisely follow the speed of the master. A special requirement is an operator adjustable 0 to 5% speed adjustment of the follower ratio. This is to compensate for material stretch or other environmental factors. This could be accomplished by manually adjusting the ratio parameter but this can be cumbersome. A solution is to use the process mode in a three input configuration and use a manually operated potentiometer to slightly modify the follower speed command. Refer to Figure A-3.

**Figure A-3 System Diagram**

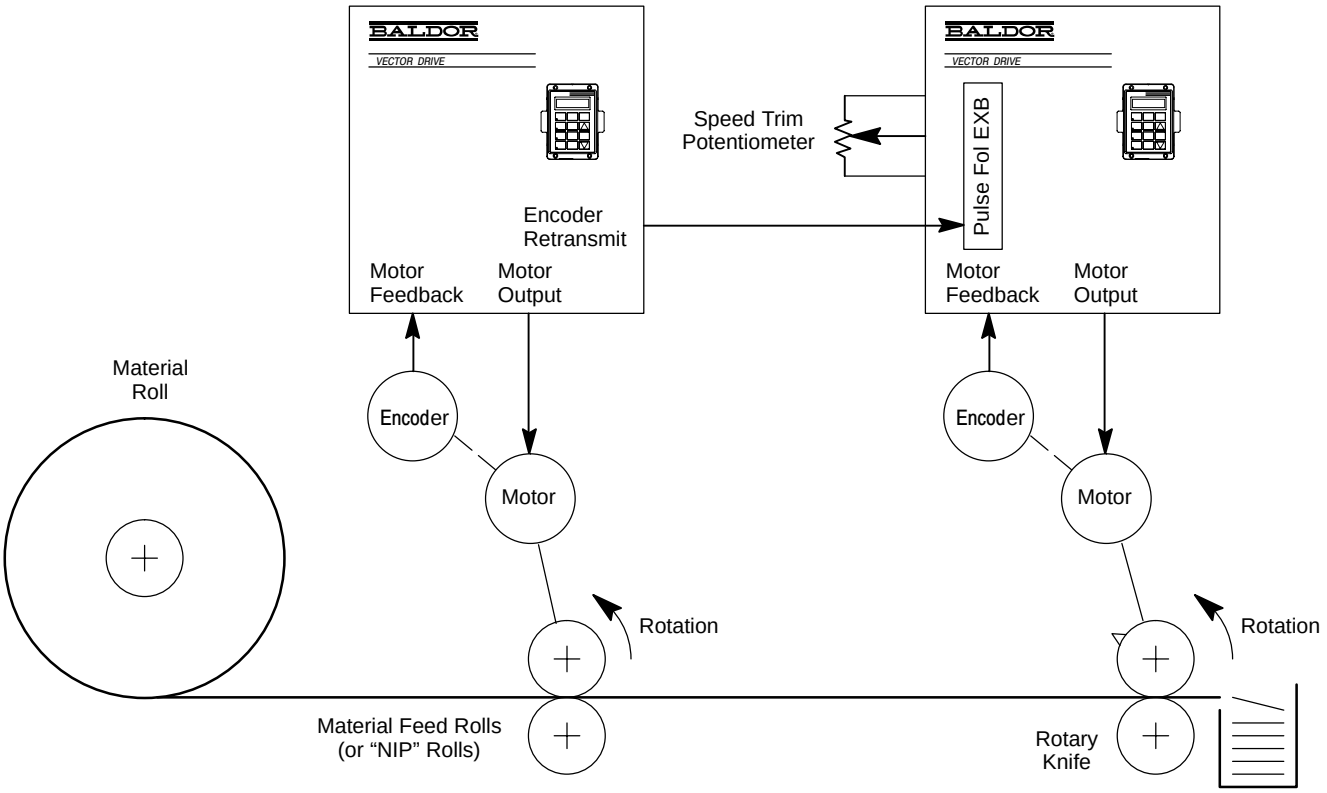


$$\text{Length of Cut (in inches)} = \frac{\text{Feet per Minute} \times 12 \text{ inches}}{\text{Rotary Knife RPM}}$$

**Figure A-4 Example Speed Trim Connection Wiring**

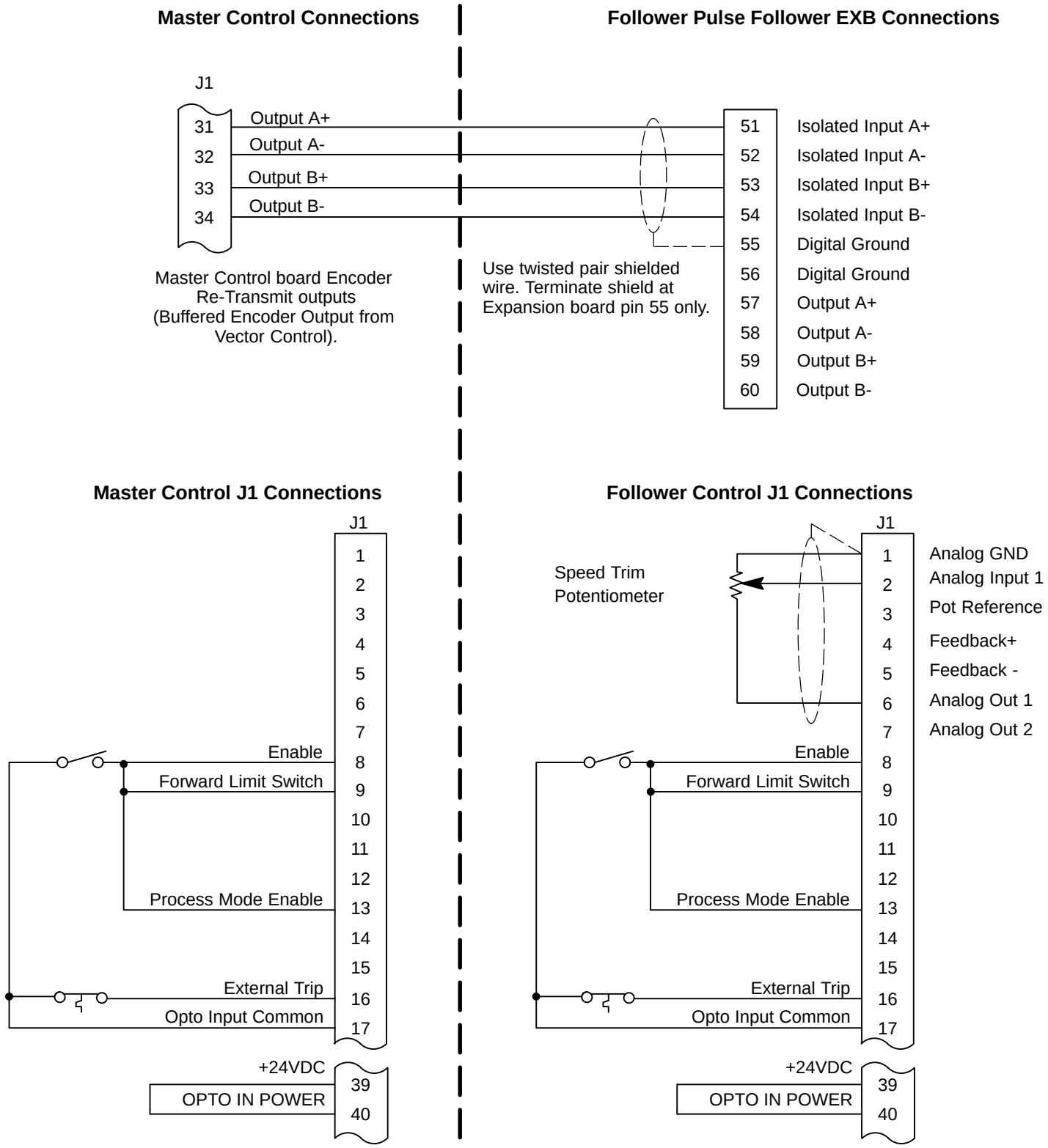

### Speed Trim Example Start-up

The process mode configuration has been selected and wired as shown in Figure A-4. The following is an example start up procedure.

1. The motor and control must be autotuned and be able to run in the keypad mode before attempting operation in the process mode. For initial start-up, follow the pre-operation checklist in Section 2 of this manual.
2. The direction of motor rotation (when FWD is pressed at the keypad) must be proper to produce water pressure. If the motor shaft rotation is backwards, then swap the encoder wires at J1-23 & 24 AND change the Level 1 Vector Control block, Feedback Align parameter to the opposite value.
3. The ACCEL and DECEL parameters are set to 0. This allows the follower to track the master as accurately as possible without any delay.
4. The Operating Mode parameter is set to process mode. This configures the opto inputs on the J1 connector for the process mode.
5. The Command Select parameter is set to EXB Pulse FOL. This configures the control as a digital pulse follower. This also puts the control into a 3 input type of system. This is very important for proper operation.
6. The Position Gain parameter is set to 0. This allows the speed trim potentiometer to trim the motor speed.
7. The Process Feedback parameter is set to potentiometer. This selects terminals J1-1, 2 for the process feedback input.
8. The Process Inverse is set to the factory preset OFF. This is not used for this application.
9. The Setpoint Source is set to Setpoint Command. This selects the internal Setpoint Command parameter for the Setpoint Command value.
10. The Setpoint Command is set to the factory preset 0.00%.
11. The Set PT ADJ Limit is set for 5%. This allows the process mode to decrease the speed of the motor up to 5% of the Max Output Speed parameter value.
12. The Process ERR TOL is set to the factory preset 10%. This is not used for this application.
13. The Follower I:O ratio is set at 1:1. In this application, the follower motor has a 1:1 following ratio. This is used to set the desired input/output scaling factor or compensate for mechanical gear ratio's.
14. The master encoder is set to the factory preset 1024. In this example, both motors have 1024 line encoders for motor feedback.
15. The Process DIFF Gain must be set to the factory preset 0.
16. The Process INT Gain must be set to the factory preset 0.
17. The Max Output Speed parameter is set to 2000 RPM for this example.
18. The analog out #1 is set to ABS speed. This programs the D/A analog output at J1-6 to indicate motor speed. This scaled output (0 to +5V) represents 0 to 2000 RPM.

19. Calculate the Process PROP Gain setting to generate the desired 5% speed trim. In this example, 2000 RPM is the maximum speed. 5% of 2000 = 100 RPM. This step will calculate the proper Process PROP Gain to result in a 100 RPM trim when the speed trim potentiometer is at maximum and the motor is at maximum speed.
20. The speed command for a maximum speed trim command (process error) is a Process PROP Gain of 1 = 4 RPM. The desired RPM is 100 RPM. The maximum voltage output from J1-6 (the analog speed output) is +5V. The full scale input of the potentiometer input is 10V.

    In this example, set the Process PROP Gain to 50.
21. The motor speed can not exceed the value of the maximum output speed parameter. When the speed command from the pulse follower board is at approximately 2000 RPM, the speed trim potentiometer can subtract from 0 RPM at the minimum setting or up to 100 RPM at the maximum setting for a motor speed of approximately 1900 RPM. When the speed command from the pulse follower board is at approximately 1000 RPM, the speed trim potentiometer can subtract up to 50 RPM. Therefore, the maximum motor speed is approximately 950 to 1000RPM.

    Close the Enable switch to enable the control in the remote mode. This can be confirmed by observing the “REM” on the keypad display. As wired, the motor can only rotate in the forward rotation direction. Start and run the master motor to 1000 RPM. The follower motor will start to rotate in the forward direction. (If the motor does not begin to rotate, the encoder signal going to the pulse follower expansion board may be reversed. Swap the wires going at terminals 51 and 52, A+ and A-.)
22. Set the speed trim potentiometer and observe the response in follower motor RPM.

## Example Application #3

### Zone Tension Control Using Load Cell Feedback

This application, Figure A-5, uses a tension signal from a load cell sensor to close the feedback loop. A load cell is a device that converts web tension (force in pounds or kilograms) to a proportional electrical signal. Several varieties of tension feedback could be used, however. The main control starts and runs the rotary die rolls to the desired production speed. As the rotary die pulls material into the process, the load cell will indicate increasing tension. This will cause the tension controller to slightly increase or decrease the speed to force the tension to the setpoint value. When the main control is at the production speed, the tension control will hold back on the material to keep the tension at the desired value. The major drawback for this system is that cannot tolerate rapid accelerations or decelerations of the rotary die rolls. If rapid accelerations are required, refer to example #4.

**Figure A-5 System Diagram**

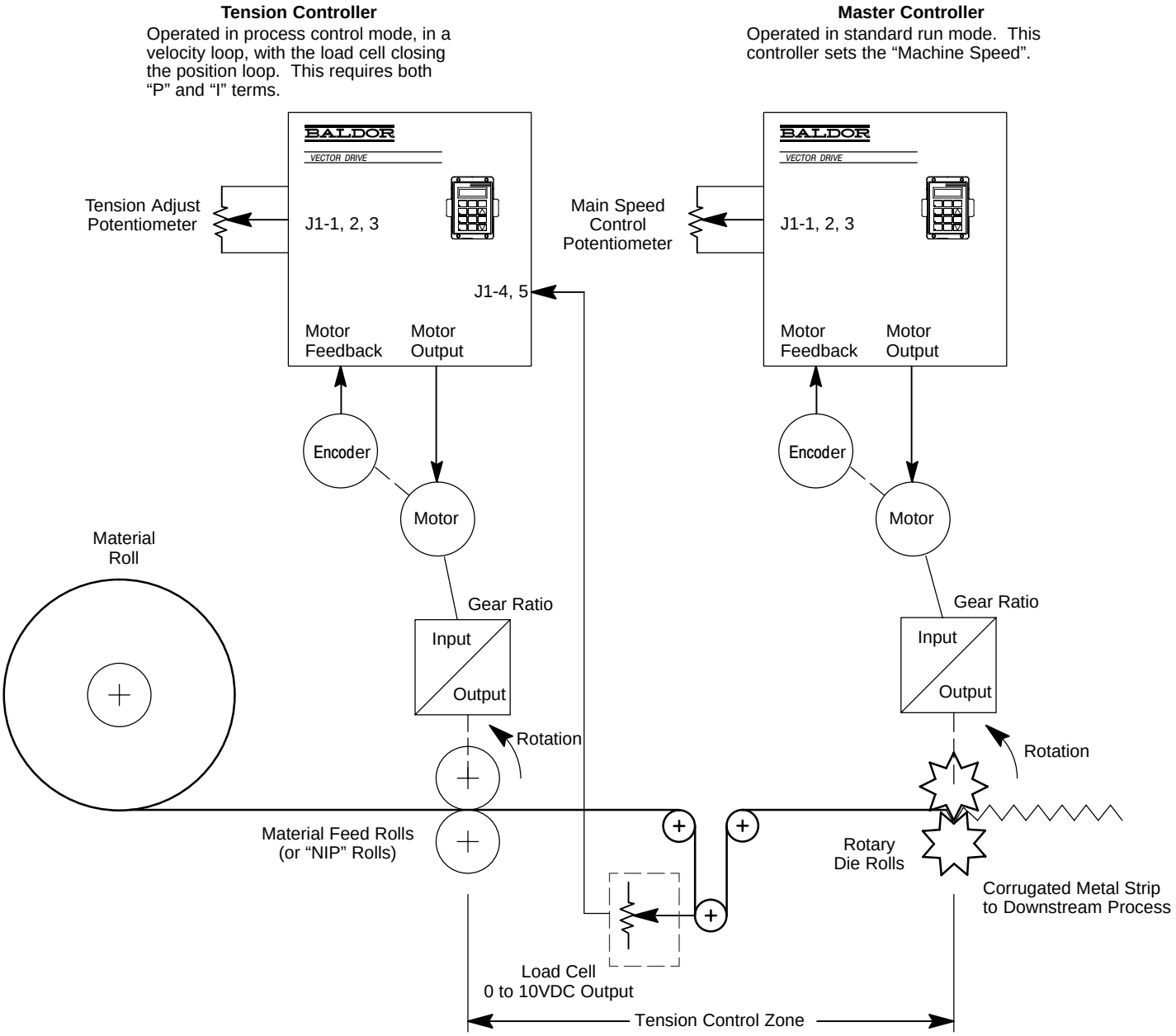

## Figure A-6 Example Zone Tension Control Wiring

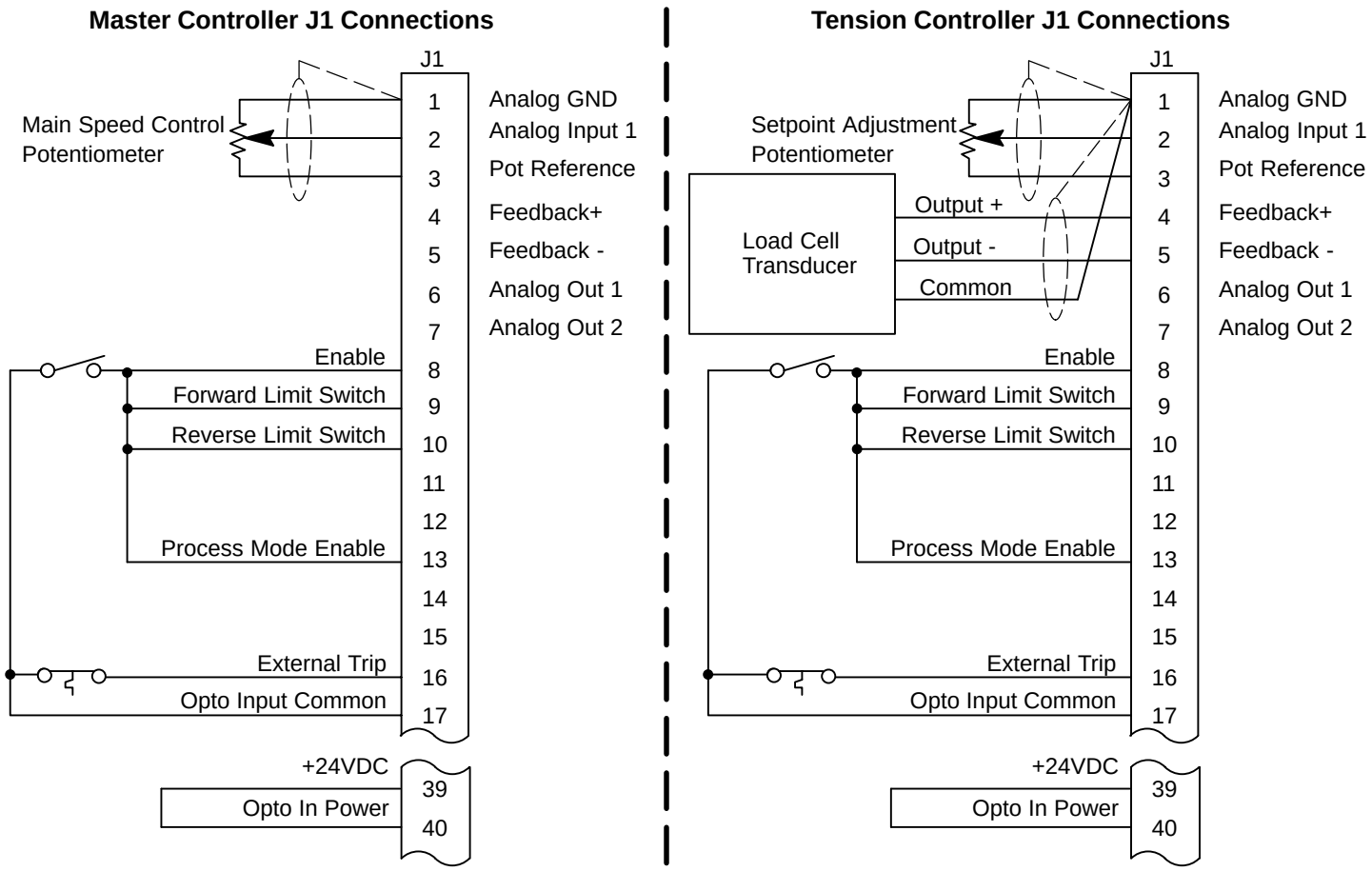

### Zone Tension Trim Example Start Up

The process mode configuration has been selected and wired as shown in Figure A-6. The following is an example start up procedure.

1. The motor and control must be auto tuned and capable of running from the keypad before attempting to start operation with the process mode.
2. The motor rotation for reverse direction from the keypad must be in the forward direction for the process direction. If this is backward, then swap the wires at J1-23 & 24 and change the Feedback Align parameter to the opposite selection.
3. The Operating Mode parameter is set to process mode. This configures the opto inputs on the J1 connector for the process mode.
4. the Command Select parameter is set to none. This puts the control into a 2 input type of system. This is very important for proper operation.
5. The Process Feedback parameter is set to ±10 volts. This selects the terminals J1-4, 5 for the Process Feedback input.
6. Measure the voltage at J1-4, 5 with a DC meter. The voltage at J1-5 must be positive with respect to J1-4. The voltage must increase with increasing tension from the load cell.
7. The Process Inverse is set to the factory preset OFF. This is not used for this application.
8. The Setpoint Source is set to potentiometer. This selects terminals J1-1, 2 for the setpoint command input from the main speed control potentiometer.
9. The Setpoint Command is set to the factory preset 0.00%. This is not used for this application.
10. The Set PT ADJ Limit is set for 100%. This will allow the process mode to adjust the speed of the motor up to the Max Output Speed parameter value.
11. The Process ERR TOL is set to the factory preset 10%. This is not used for this application.
12. The Process DIFF Gain is set to the factory preset 0 as a starting point.
13. The Process INT Gain is set to the factory preset 0 as a starting point.
14. The Process PROP Gain is set to 100 as a starting point.
15. The Follower I:O ratio is set to the factory preset 1:1. This is not used for this application.
16. The master encoder is set to the factory preset 1024 and is not used here.
17. The main speed control potentiometer is then set to 1/5 full scale or 2VDC at J1-1, 2.
18. Measure the load cell transducer voltage at J1-4, 5. The load cell for this example is scaled at a 0 to +10V signal with 0V = 0 tension and +10V = max tension. The voltage with no material threaded in the machine should be approximately 0V.
19. The control is then enabled in the remote mode. This can be confirmed by observing “REM” on the keypad display and assuring that J1-8, 9, 10, 13 & 16 are closed. As wired, the motor can rotate in either rotation direction. The motor should begin to rotate in the reverse direction. (If the motor begins to rotate forward, the process feedback may be reversed. Swap the wires at J1-4 and J1-5.)

20. Externally apply some force to the load cell. The direction of this force must be in the same direction as when the material is normally pulled through the machine. In the example, the load cell in Figure A-7 will be pulled “up”.
21. Observe the load cell transducer voltage at J1-4, 5. While increasing tension or pulling “up” on the load cell, the load cell voltage at J1-4, 5 should increase. When the voltage at J1-4, 5 exceeds +2.0V by a small amount, the motor RPM should begin to decrease and eventually stop and possibly reverse rotation. This is indicating the feedback polarity is correct and the system is properly operating.
22. Stop and disable the entire machine.
23. Thread the machine with the normal running material.
24. Enable and start the follower control. The follower motor should slowly start to run forward until some tension is attained at the load cell.
25. Start and run the master control to a slow speed, such as 100 RPM. The follower will run at approximately the same speed as the master and will slowly try to adjust the motor speed to keep constant tension.
26. Observe the load cell voltage at J1-4, 5. Increase the Process PROP Gain from 100 to 200.
27. Increase the Process PROP Gain additionally another 100, to 300 and so on. When the readings become unstable or cause the motor to vibrate, then decrease the Process PROP Gain until the readings become smooth or stable again. This is the largest gain the machine can tolerate.
28. The process feedback signal will not exactly equal the Setpoint Command with only the Process PROP Gain adjusted. This steady state error will be adjusted using the Process INT Gain.
29. The Process INT Gain parameter is set at 0.10Hz as a starting point.
30. Set the main speed control potentiometer to 1VDC at J1-1, 2.
31. Then quickly set the main speed control potentiometer for approximately 2VDC at J1-1, 2.
32. Using a DC meter, observe the load cell voltage at J1-4, 5. The load cell voltage at J1-4, 5 will slowly achieve as close to 2V as possible.
33. If it was too sluggish then increase the Process INT Gain from 0.10Hz to 0.20Hz. Perform steps 38, 39, and 40 again but increase the Process INT Gain additionally another 0.10Hz, to 0.30Hz and so on. When the readings become unstable or cause the motor to vibrate. Then decrease the Process INT Gain until the readings become smooth or stable again. Most systems will operate best with as little integral gain as possible.

## Example Application #4

### Zone Tension Control Using Load Speed Trim Control

This application is very similar to application #3 but has a very important performance advantage. The difference is the use of a master speed command signal that represents the speed of the main machine. This signal is used to command the speed of the follower to approximately the correct speed and the load cell trims the remainder of speed (up to 5%) to control the web tension. This results in a system that can be 10 to 50 times as responsive to acceleration and deceleration as application #3 (which does not have the master speed signal). A Master Pulse Follower Expansion board is used for the master speed signal.

**Figure A-7 System Diagram**

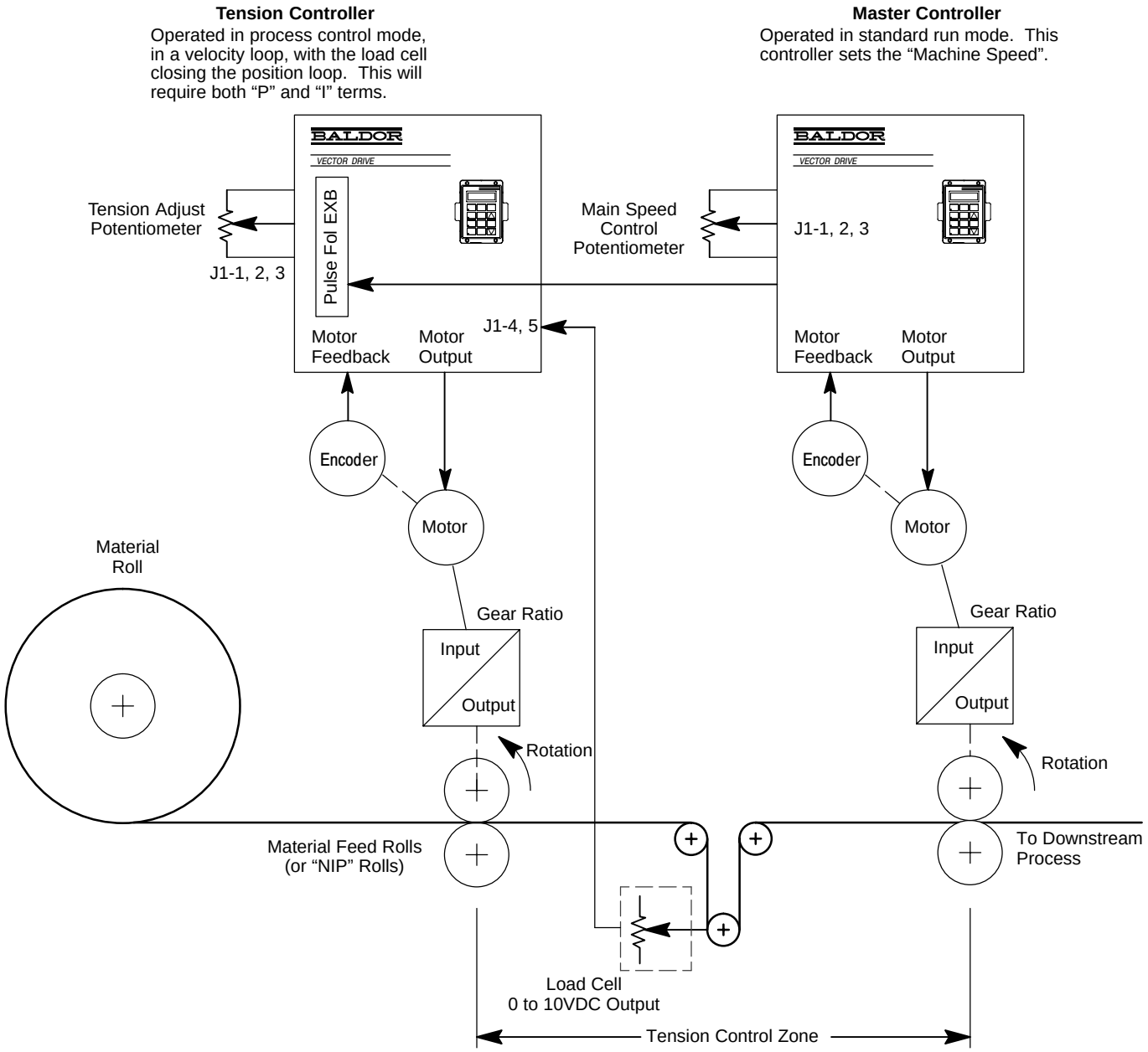

## Figure A-8 Example Zone Tension Using Speed Trim Control Wiring

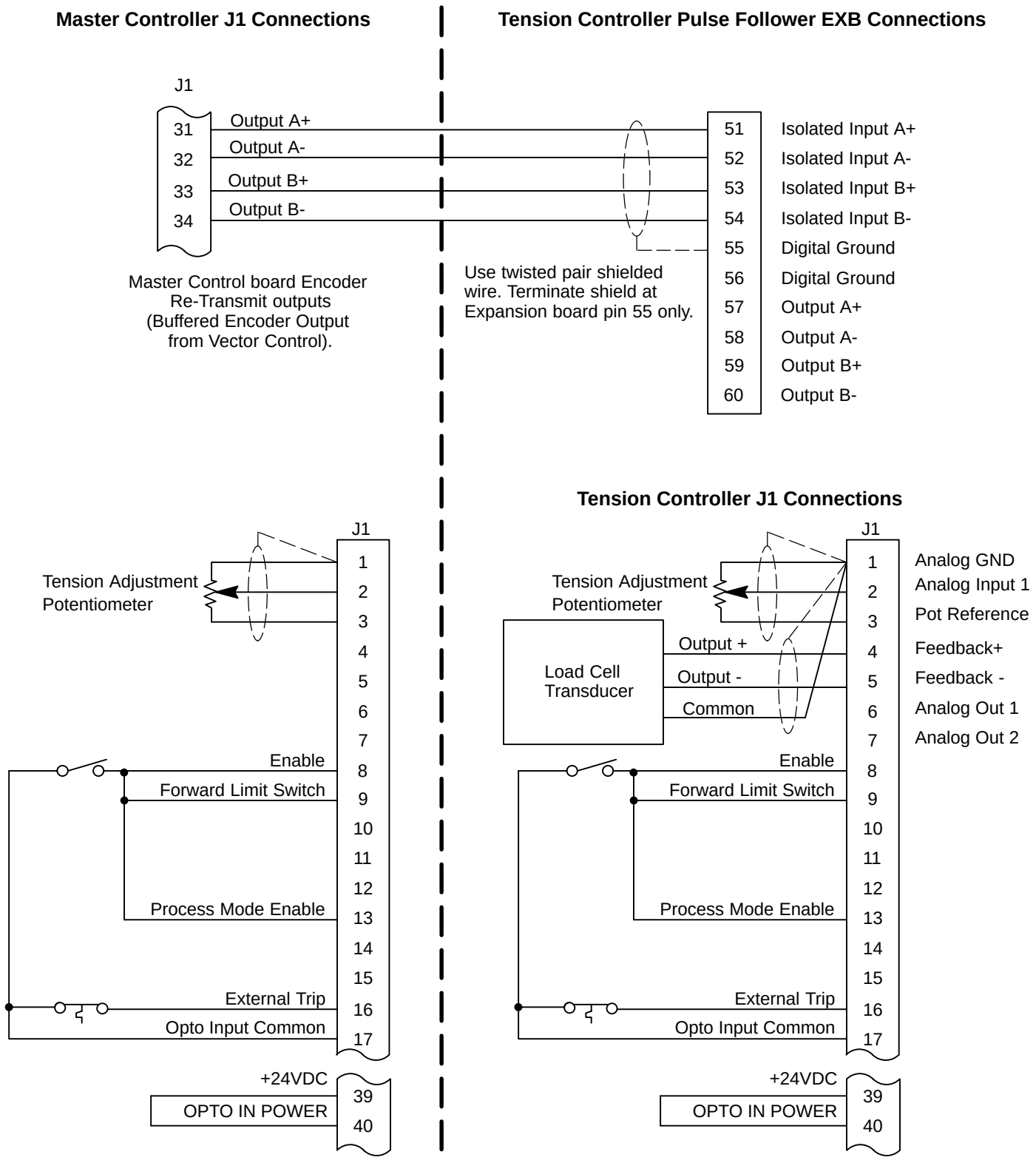

### Zone Tension Control Using Speed Trim Control Start Up

The process mode configuration has been selected and wired as shown in Figure A-8. The following is an example start up procedure.

1. The motor and control must be autotuned and be able to run in the keypad mode before attempting operation in the process mode. For initial start-up, follow the pre-operation checklist in Section 2 of this manual.
2. The direction of motor rotation (when FWD is pressed at the keypad) must be proper to produce water pressure. If the motor shaft rotation is backwards, then swap the encoder wires at J1-23 & 24 AND change the Level 1 Vector Control block, Feedback Align parameter to the opposite value.
3. The Operating Mode parameter is set to process mode. This configures the opto inputs on the J1 connector for the process mode.
4. The Command Select parameter is set to EXB Pulse FOL. This configures the control as a digital pulse follower. This also puts the control into a 3 input type of system. This is very important for proper operation.
5. The position gain parameter is set to 0. This is required to allow the Process Control to trim the motor speed.
6. The Process Feedback parameter is set to ± 10 VOLTS. This selects the terminals J1-4, 5 for the Process Feedback input.
7. Measure the voltage at J1-4, 5 with a DC meter. The voltage at J1-5 must be positive with respect to J1-4. The voltage must increase with increasing tension from the load cell.
8. The Process Inverse is set to the factory preset OFF. This is not used for this application.
9. The Setpoint Source is set to potentiometer. This selects terminals J1-1, 2 for the setpoint command input.
10. The Setpoint Command is set to the factory preset 0.00%. This is not used for this application.
11. The Set PT ADJ Limit is set for 5%. This will allow the process mode to adjust the speed of the motor up to 5% of the Max Output Speed parameter value.
12. The Process ERR TOL is set to the factory preset 10%. This is not used for this application.
13. The Process DIFF Gain is set to the factory preset 0 as a starting point.
14. The Process INT Gain is set to the factory preset 0 as a starting point.
15. The Process PROP Gain is set to 100 as a starting point.
16. The Follower I:O ratio is set at 1:1. In this application, the follower motor has a 1:1 following ratio with the same diameter rolls. This is used to set the desired input/output scaling factor or compensate for mechanical gear ratio's.
17. The master encoder is set to the factory preset 1024. In this example, both motors have 1024 line encoders for motor feedback.
18. Ensure that the machine is ready mechanically to run and no material is threaded.
19. On the tension controller, close J1-8, 9 to 17 temporarily. The process mode enable at J1-13 must be left open.
20. Start and run the master control to a slow speed, such as 100 RPM.

21. As wired, the motor can only rotate in the forward rotation direction. The follower motor should start to rotate in the forward direction. (If the motor does not begin to rotate, the encoder signal going to the pulse follower expansion board may be reversed. Swap the wires at the pulse follower expansion board terminals 51 and 52, A+ and A-.)
22. Increase the speed of the master control to maximum speed. In this example, it will be to 1750 RPM. The follower control must follow at exactly the same speed. If the machine requires matching surface speed, not RPM. Then adjust the follower ratio to match the surface speeds. This adjustment is critical and the follower should be well within 5% of the master speed.
23. Stop the master control.
24. On the tension controller, close J1-8, 9 & 13 to 17. This enables the follower control and the process control loop.
25. Set the tension control potentiometer to 1/5 full scale or 2VDC at J1-1, 2.
26. Measure the load cell transducer voltage at J1-4, 5. The load cell for this example is scaled at a 0 to +10V signal with 0V = 0 tension and +10V = max tension. The voltage with no material threaded in the machine should be approximately 0V.
27. The control is then enabled in the remote mode. This can be confirmed by observing the “REM” on the keypad display and assuring that J1-8, 9, 13 & 16 are closed. As wired, the motor can only rotate in the forward rotation direction. The motor should begin to rotate in the forward direction. (If the motor does not begin to rotate forward, the process feedback may be reversed. Swap the wires at J1-4 and J1-5.)
28. Externally apply some force to the load cell. The direction of this force must be in the same direction as when the material is normally pulled through the machine. In the example, the load cell in Figure A-7 will be pulled “up”.
29. Observe the load cell transducer voltage at J1-4, 5. While increasing tension or pulling “up” on the load cell, the load cell voltage at J1-4, 5 should increase. When the voltage at J1-4, 5 exceeds +2.0V by a small amount, the motor RPM should begin to decrease and eventually stop. This indicates the feedback polarity is correct and the system is properly operating.
30. Stop and disable the entire machine.
31. Thread the machine with the normal running material.
32. Enable and start the follower control. The follower motor should slowly start to run forward until some tension is attained at the load cell.
33. Start and run the master control to a slow speed, such as 100 RPM. The follower will run at approximately the same speed as the master and will slowly try to adjust the motor speed to keep constant tension.
34. Observe the load cell voltage at J1-4, 5. Increase the Process PROP Gain from 100 to 200.
35. Increase the Process PROP Gain additionally another 100, to 300 and so on. When the readings become unstable or cause the motor to vibrate, then decrease the Process PROP Gain until the readings become smooth or stable again. This is the largest gain the machine can tolerate.

36. The process feedback signal will not exactly equal the setpoint command with only the Process PROP Gain adjusted. This steady state error will be adjusted using the Process INT Gain.
37. The Process INT Gain parameter is set at 0.10Hz as a starting point.
38. Set the main speed control potentiometer to 1VDC at J1-1, 2.
39. Then quickly set the main speed control potentiometer to approximately 2VDC at J1-1, 2.
40. Using a DC meter, observe the load cell voltage at J1-4, 5. The load cell voltage at J1-4, 5 will slowly achieve as close to 2V as possible.
41. If the response was sluggish then increase the Process INT Gain from 0.10Hz to 0.20Hz. Perform steps 38, 39, and 40 again but increase the Process INT Gain additionally another 0.10Hz, to 0.30Hz and so on. When the readings become unstable or cause the motor to vibrate, decrease the Process INT Gain until the readings become smooth or stable again. Most systems operate best with as little integral gain as possible.

## Example Application #5

### Torque Share System For Common Shaft Loads

This application can be difficult to deal with when trying to have two motors share a common load. The solution is to have a master motor control the speed and a second follower motor merely help with the load or “torque share”. The follower control receives a torque command signal from the master and develops the commanded torque of the master in the follower motor. This system is able to drive a larger load than one control and motor.

Best performance results when the two motor shafts are rigidly coupled together. Very high gear ratios and large amounts of gear backlash can cause problems for this application. This system also performs best when the load inertia is much greater than the motor inertia. The two controls and motors should be equally sized and of similar characteristics. For precision torque share applications, use the high resolution analog expansion board in the follower controller to process the analog output command signal from the master controller (J1-1, 6).

**Figure A-9 System Diagram**

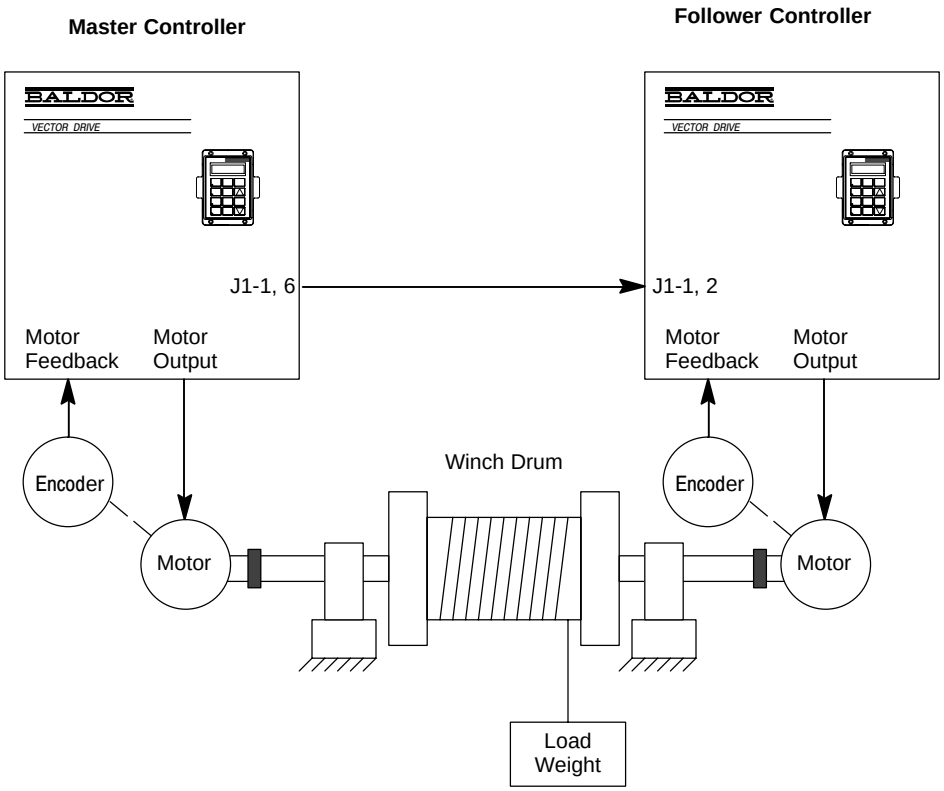

**Figure A-10 Torque Share System For Common Shaft Loads Control Wiring**

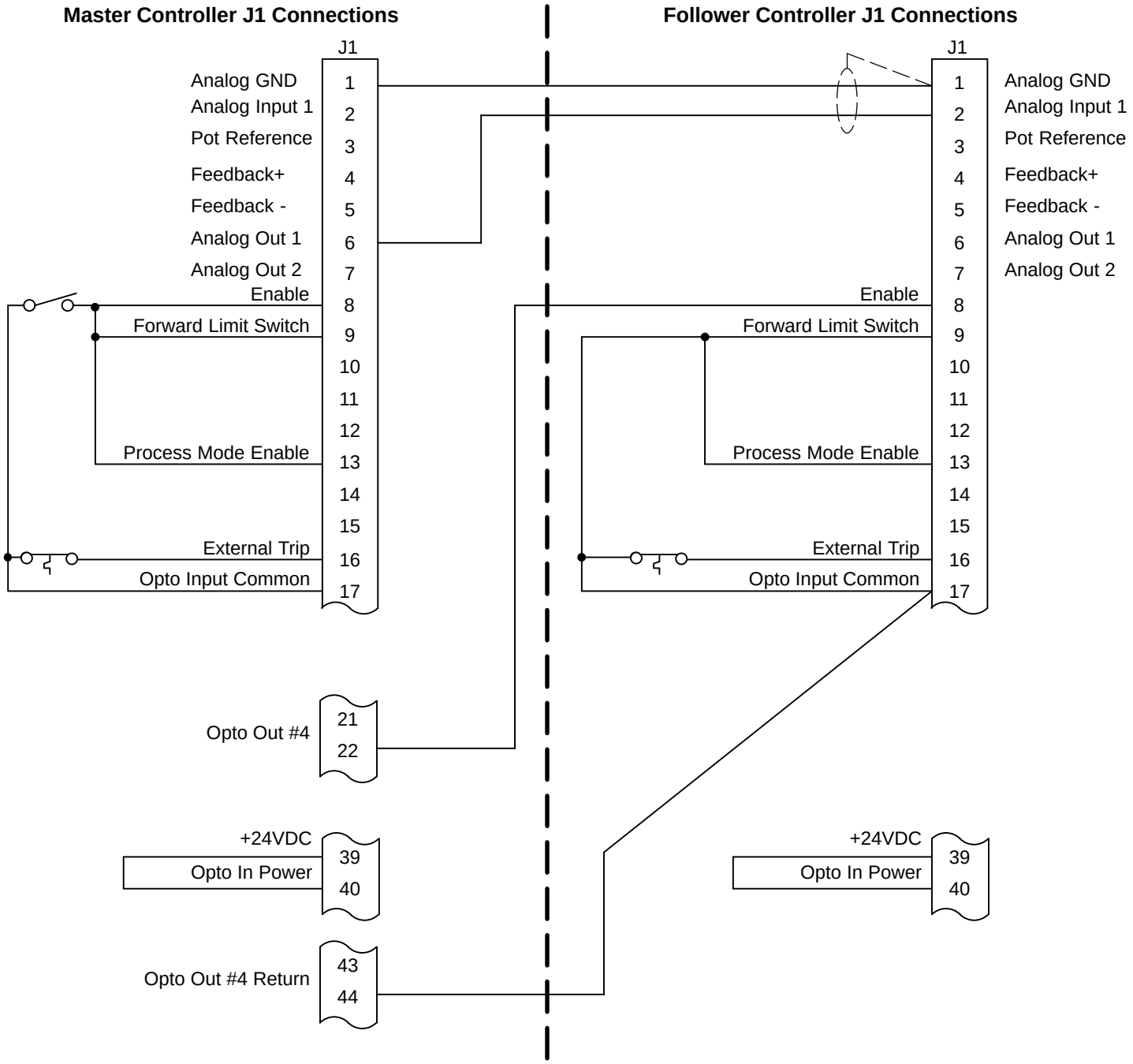

### Torque Share System For Common Shaft Loads Start Up

The process mode configuration has been selected and wired as shown in Figure A-10. The following is an example start up procedure.

1. The motor and control must be autotuned and be able to run in the keypad mode before attempting operation in the process mode. For initial start-up, follow the pre-operation checklist in Section 2 of this manual.
2. For nose to nose shaft coupling as shown in the diagram, the motor rotation on each control must be in the opposite direction. This can be verified by running the master control at a slow speed in forward or “FWD” direction. By observing the keypad display on the follower, the follower should indicate the same speed, but with a “REV” in the display. If the follower is indicating a “FWD” display, then swap the wires at J1-23 & 24 AND change the Feedback Align parameter to the opposite selection (on the follower). Re-run the test.

   For shoulder to shoulder motor operation, then verify both controls are running the same direction.

**Master Controller Only**

3. Set the Opto Output #4 parameter to Drive ON (output block parameter section). As wired, the follower will not be enabled unless the master control has no faults and is capable of providing torque. This is functional if the master is operated remotely or from the keypad.
4. Set the Analog Out #1 parameter to CMD Load CUR (output block parameter section). This programs the analog output at J1-1,6 to represent the commanded load current. This is used by the follower control to command load current in the follower motor. The scale of this output is 0 to +5V. 0V = maximum negative peak current, +2.5V = 0 current and +5V = maximum positive peak current.

**Master Controller Only**

5. Set the Operating Mode parameter to process mode. This configures the opto inputs on the J1 connector for process mode.
6. Set the Command Select parameter to NONE. This puts the control into a 2 input type of system. This is very important for proper operation.
7. Set the Process Feedback parameter to potentiometer. This selects the terminals J1-1, 2 for the commanded load current input from the master control.
8. The Process Inverse is set to the factory preset OFF. This is not used for this application.
9. The Setpoint Source is set to Setpoint Command. This selects the Setpoint Command parameter value for the setpoint.
10. The Setpoint Command is set to 25.0%. This is set to 25.0% to represent 2.50 volts.
11. Set the Set PT ADJ Limit to 100% for this application.
12. The Process ERR TOL is set to the factory preset 10%. This is not used for this application.
13. Go to the diagnostic menu. In the diagnostic menu, a display shows the Amps/Volts rating of the control in the lower left hand corner. In this example, the Amps/Volts rating is 44.0A/V. Note this value.

14. The follower analog input at J1-1, 2 must be scaled to match the master control analog output voltage. The full scale output from the master J1-1, 6 terminals is ± 2.5 volts and is equal to maximum current command. Note, the total voltage is 0 to +5 volts but +2.5 volts represents 0 current command. The full scale input of the potentiometer selection at J1-1 , 2 is 10 volts, therefore only 1/4 of the input voltage range is used.

    The desired maximum current rating is the value in amps RMS. For this example, the master control peak current limit parameter is set to 120 amps. To share current equally between both controls, the follower should be scaled to supply the same current as the master, over the ± 2.5 V input range. When the master is at peak current limit, the follower should be at the same current value.

$$\text{Process PROP Gain} = \left(\frac{\text{10V Full Scale}}{\text{2.5V Input}}\right) \times \left(\frac{\text{Desired MAX Current in amps} \times 83.525}{\text{A/V Scaling}}\right)$$

In this example, set the Process PROP Gain to 911.

15. The Process INT Gain is set to the factory preset 0.
16. The Process DIFF Gain is set to the factory preset 0.
17. The Follower I:O ratio is set to the factory preset 1:1. This is not used for this application.
18. The Master Encoder is set to the factory preset 1024. This is not used for this application.
19. To complete the final start up, operate the master control by itself with no load. Verify proper operation before proceeding.
20. Note how much current that the load required in step 19.
21. In the follower control, in the Output Limits block, set the PK Current Limit to 50% of the motor full load amps. As part of the calculate presets in the auto tuning procedure, this is usually set to 150% of the motor full load amps. This parameter is reduced to limit the possibility of mechanical damage if there is a problem when the follower is started.

Note: Do not set this value equal to or less than the Motor MAG AMPS parameter. Doing so will not allow any motor torque at all.

22. Verify that there is +2.5 volts at J1-1, 2 on the follower control. This should be the case when the master control is disabled or holding zero speed with no load. If the +2.5 volts is not present, determine the problem and solve it before proceeding.
23. Start and run the master from the keypad and command forward rotation at a slow speed with a light load.
24. Observe the current display on the keypad on both the master and follower controls.
25. The displayed current on both controls should be similar and at a low value. The master control should be indicating forward rotation by a FWD direction on the keypad display. The follower control should be indicating the opposite or a REV direction on the keypad display.

26. If the currents are very high for a light load, then the load command current polarity is reversed for the follower controller. This will usually be indicated on the follower control by a FWD direction on the keypad display. The solution is to change the torque polarity of the follower. Disable the master and follower controls. On the follower, swap the wires at terminals 23 and 24. This is swapping the encoder A and $\overline{A}$ wires. Then change the Feedback Align parameter to the opposite value. Now perform steps 19 to 24 again.
27. If both controls appear to be properly operating, disable both controls. Increase the follower PK Current Limit value to normal motor rated value, usually set to at least 150% of the motor full load amps.
28. Enable and run both the master and follower controls and verify proper operation. Under normal operating conditions, each similarly sized control should display about the same amount of current.
29. If the system has a tendency to oscillate with both controls operating, decrease the master controller Speed PROP Gain. Decrease the Speed PROP Gain until the oscillations are eliminated and system operation is satisfactory.
30. If decreasing the Speed PROP Gain of the master does not reduce the oscillations, increase the CUR Rate Limit of the follower. In the follower control only, increase the CUR Rate Limit parameter. A setting of 0.100 to 0.500 seconds will usually be satisfactory. An excessive CUR Rate Limit value will result in sluggish response in the follower control.

Note: This parameter works like an accel rate on the torque command signal input.

## Example Application #4

### Constant Force Infeed For Sawmill

This application uses a large, rotary saw blade to rip wood stock. The saw blade motor is run across the line at a constant speed. An AC current sensor measures the current in one phase of the saw blade motor. This AC current measured in the saw blade motor will approximate the load. The 0 to 10V signal from the AC current transducer is supplied to the infeed motor control at J1-4, 5. A potentiometer will be used by the operator to set the basic speed of the infeed. The control will adjust the speed of the infeed motor to keep the current as constant as possible in the saw blade motor. This method will automatically trim the infeed speed to compensate for different thickness and hardness of the wood material. For example, if the material is heavy and the saw blade motor current is higher than the desired value, the control will reduce the speed of the infeed motor. When the load on the saw blade motor is reduced, the motor current is reduced and the infeed motor speed will increase. A manual/automatic switch will allow selection of semi-automatic operation or manual operation.

**Figure A-11 System Diagram**

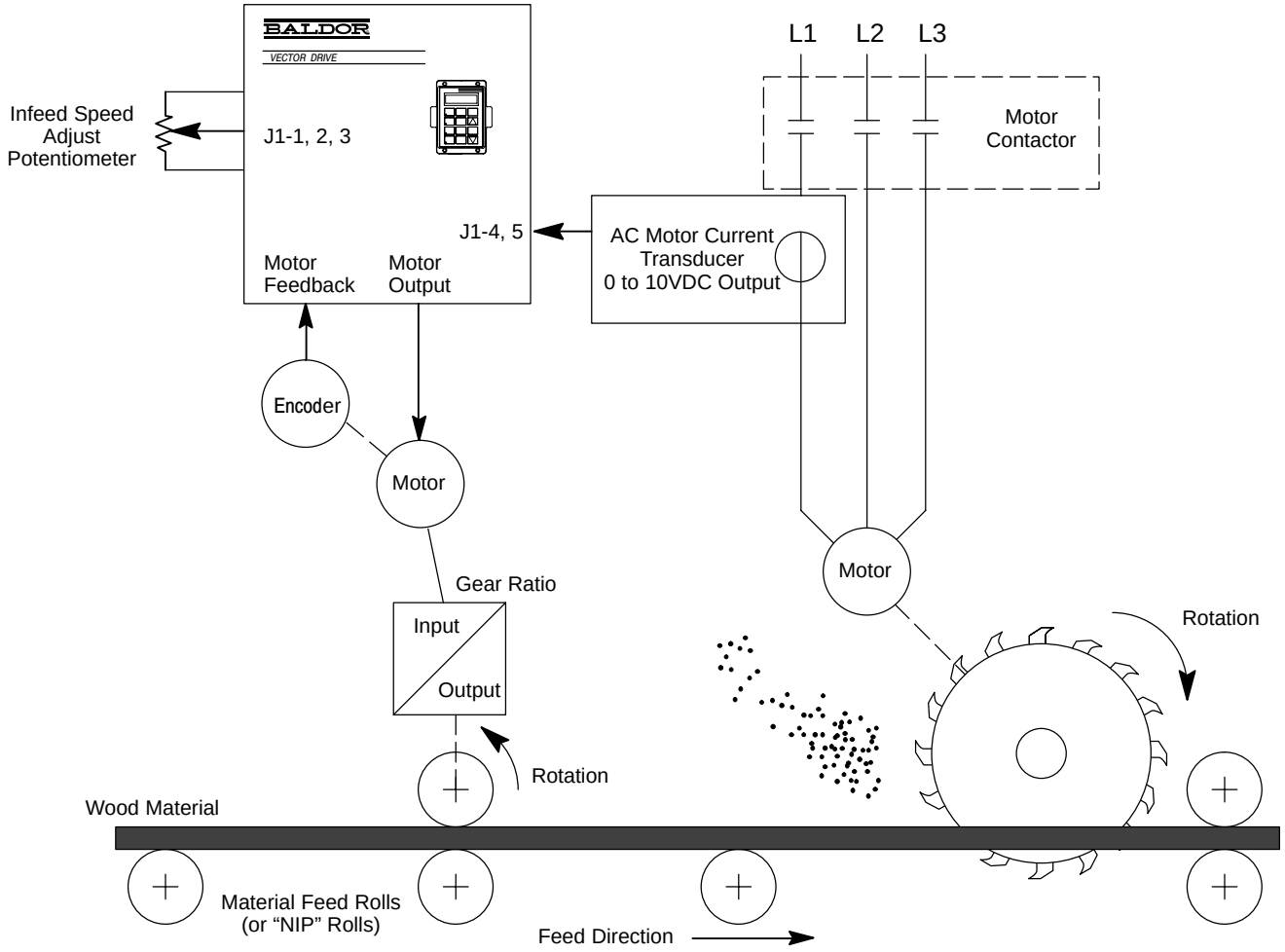

**Figure A-12 Example Constant Force Infeed For Sawmill**

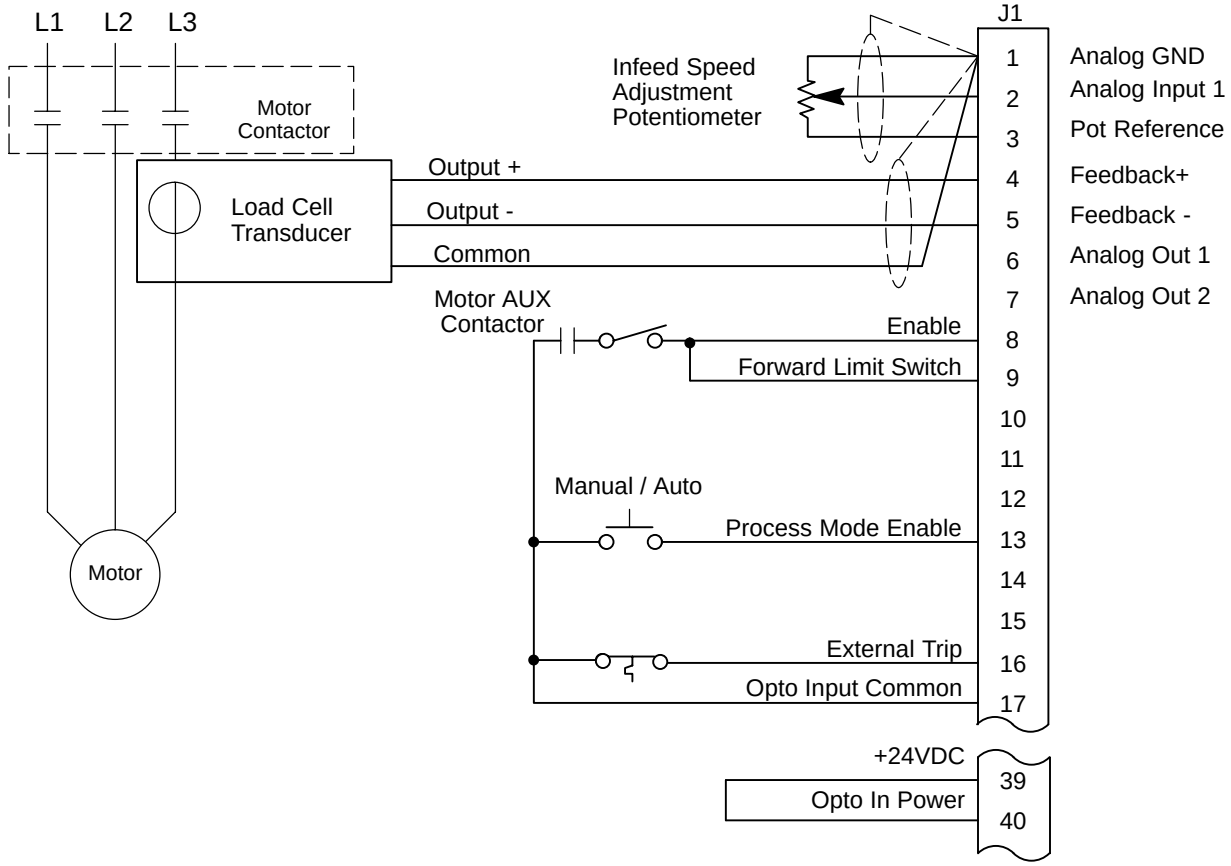

### Constant Force Infeed For Sawmill Example Start Up

The process mode configuration has been selected and wired as shown in Figure A-11. The following is an example start up procedure.

1. The motor and control must be autotuned and be able to run in the keypad mode before attempting operation in the process mode. For initial start-up, follow the pre-operation checklist in Section 2 of this manual.
2. The direction of motor rotation (when FWD is pressed at the keypad) must be proper to produce water pressure. If the motor shaft rotation is backwards, then swap the encoder wires at J1-23 & 24 AND change the Level 1 Vector Control block, Feedback Align parameter to the opposite value.
3. The Operating Mode parameter is set to Process Mode. This configures the opto inputs on the J1 connector for the process mode.
4. The Command Select parameter is set to POTENTIOMETER. This puts the control into a 3 input type of system. This is very important for proper operation.
5. The MAX OUTPUT SPEED sets the maximum infeed motor RPM. This is used to limit the maximum feed rate into the saw blade.
6. The Process Feedback parameter is set to ± 10 VOLTS. This selects the terminals J1-4, 5 for the Process Feedback input, to sense the saw blade motor current.
7. Measure the voltage at J1-4, 5 with a DC meter. The voltage at J1-5 must be positive with respect to J1-4. The voltage at J1-4, 5 must increase with increasing current from the saw blade motor current sensor.
8. The Process Inverse is set to the factory preset OFF. This is not used for this application.
9. The Setpoint Source is set to Setpoint Command. This selects the Setpoint Command parameter for the setpoint command input.
10. The Setpoint Command is set to the factory preset +50.0%. This is set to the desired amount of current in the saw blade motor. In this example, +50.0% in this parameter corresponds to +5volts on the feedback input at J1-4, 5. +5volts at J1-4, 5 is also equivalent to the saw blade motor rated full load amps.
11. The Set PT ADJ Limit is set for 30%. This will allow the process mode to adjust the speed of the motor up to 30% of the Max Output Speed parameter value.
12. The Process ERR TOL is set to the factory preset 10%. This is not used for this application.
13. The Follower I:O ratio is set to the factory preset 1:1. This is not used for this application.
14. The MASTER ENCODER is set to the factory preset 1024 and is not used here.
15. The Process DIFF Gain is set to the factory preset 0 as a starting point.
16. The Process INT Gain is set to the factory preset 0 as a starting point.
17. The Process PROP Gain is set to 100 as a starting point.
18. Turn on the saw blade contactor to start the saw blade motor.

19. Measure the saw blade current transducer output voltage at J1-4, 5. The saw blade motor current sensor for this example is scaled at a 0 to +10V signal with 0V = 0 amps and +5V = motor FLA (Full Load Amps). Under normal running no load conditions, the motor will use approximately 40% of the motor FLA. Therefore, the useable range will be from +2V indicating no load and +10V indicating twice motor full load. The voltage at J1-5 must be positive with respect to J1-4.
20. The control is then enabled in the remote mode. This can be confirmed by observing the “REM” on the keypad display and assuring that J1-8, 9 and 16 are closed to 17. Make sure the manual/auto switch is in the manual position. As wired, the motor can rotate only in the forward direction. The rate of the motor rotation is set by the infeed speed potentiometer. Turn the infeed speed potentiometer 1/4 turn from zero. The motor should begin to rotate in the forward direction, feeding stock into the saw blade.
21. Then change the manual/auto switch to the auto position. If the saw blade is not loaded, then the motor speed should increase to as much as 30% of the Max speed value.
22. Set the infeed speed potentiometer to the desired basic infeed speed.
23. Load some material into the infeed section for processing.
24. While the system is ripping some material stock, observe the performance of the system. Also observe the voltage on the saw blade motor current sensor when the saw blade is ripping the material.
25. If the infeed speed appears too sluggish when the saw blade load changes, then increase the Process PROP Gain in steps of 10 until the response is as desired.
26. If the infeed speed appears too responsive when the saw blade load changes, then decrease the Process PROP Gain in steps of 10 until the response is as desired.
27. If the response of the system appears to be unstable when ripping a large continuous piece of material, then the use of the Process INT Gain may improve the situation. The Process INT Gain will smooth out the response and eliminate any steady state errors. A suggested setting to start would be 2Hz.

# Appendix B
# Process Control System Block Diagram

**Figure B-1 Process Control Block Diagram**

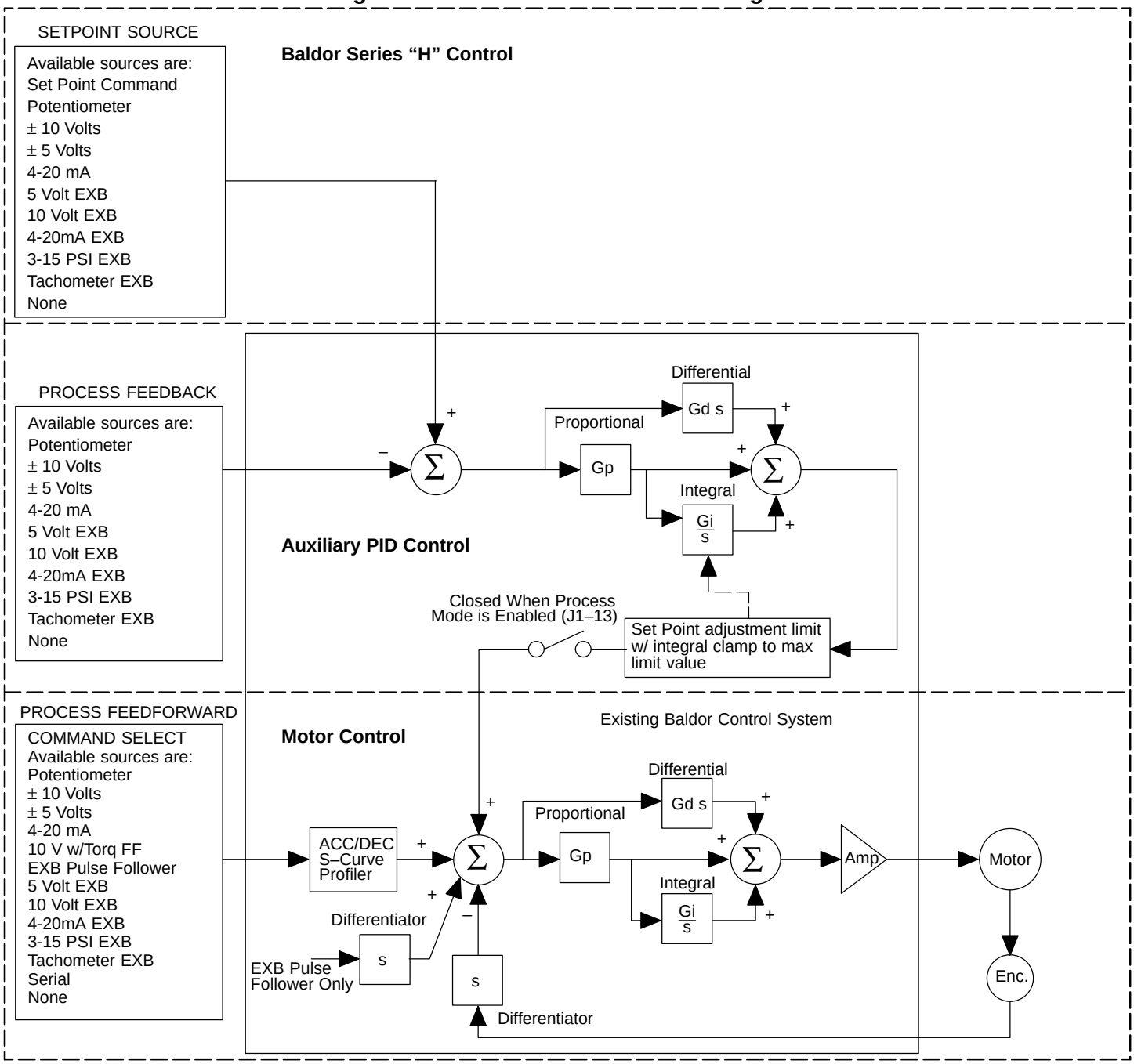

## PI Controller

The speed unit gain for maximum error in the proportional loop is 4 RPM. For example, an output RPM of 4 RPM is commanded for a maximum error input (with proportional gain =1).

The current unit gain for maximum error in the process proportional loop depends on the current scaling (A/V Scaling) of the motor feedback sensors. The output current in amps can be determined by the following:

$$\text{Commanded Amps} = \epsilon \times \left( \frac{K_p \times (\text{A/V Scaling})}{83.525} \right)$$

Where:
$K_p$ = Process Proportional Gain
$\varepsilon$ = Error Signal

Both the current and rate control loops are of the Proportional plus Integral type. If “E” is defined to be the error signal:

E = Setpoint Command – Process Feedback

The PI controller operated on “E” as:

Output = $(K_p * E) + (K_i \int E\, dt)$

where $K_p$ is the proportional gain of the system and $K_i$ is the integral gain of the system.

The transfer function (output /E) of the controller using 1/s (Laplace Operator) to denote the integral:

Output/E = $K_p + K_I / s = K_p (s + K_i/K_p) /s$.

The second equation shows that the ratio of $K_i/K_p$ is a frequency in radians/sec. In the Baldor Series 18H AC Vector Control, the integral gain has been redefined to be:

$K_I = (K_i / K_p) / (2\pi)$ Hz,

The transfer function is:

Output/E = $K_p (s + 2\pi K_I) / s$.

This sets the integral gain as a frequency in Hz. As a rule of thumb, set this frequency about 1/10 of the bandwidth of the control loop.

The proportional gain sets the open loop gain of the system, the bandwidth (speed of response) of the system. If the system is excessively noisy, it is most likely due to the proportional gain being set too high.

BALDOR ELECTRIC COMPANY
P.O. Box 2400
Ft. Smith, AR 72902–2400
(501) 646–4711
Fax (501) 648–5792


MN707

Printed in USA
6/98 C&J 5000