Digital Soft–Start

Installation & Operating Manual

3/07

MN850

Any trademarks used in this manual are the property of their respective owners.

Table of Contents

Section 1
General Information 1-1
Introduction 1-1
Limited Warranty 1-1
Safety Notice 1-2
Section 2
Installation 2-1
Receiving, Inspection and Storage 2-1
Physical Location 2-1
Cover Removal 2-2
Remote Keypad Installation 2-2
Optional Remote Keypad Installation 2-3
AC Main Circuit 2-4
Power Disconnect 2-4
Protective Devices 2-4
NEC Fuse Requirements 2-4
Main Input Contactor 2-4
UL Required Fuses for Short Circuit Rating 2-5
Motor Overload and Thermal Protection 2-6
In−Delta Connections 2-7
Fan Connections 2-7
Wire Size and Protection Devices 2-8
Three Wire Control 2-9
Two Wire Control 2-9
NEMA 12/4 Installation 2-10
Reversing Contactor 2-11
Additional Connections J2, J3, J4 2-11
Installation Procedure 2-12
Section 3
Operation 3-1
Overview 3-1
Start−Up Procedure 3-1
Keypad Operation 3-2
Operating Modes 3-3
System Status Mode 3-3
Menu Mode 3-3
Data Entry Mode 3-3
Menu Structure 3-4
Menu Navigation Examples 3-5
Menu Navigation 3-5
Setup Examples 3-6
Saving Parameters 3-6
Select Remote Starting and Stopping 3-6
Motor Starting Definitions 3-7
Keypad Starting and Running the Motor with Factory Settings 3-8
Keypad Starting and Running the Motor in Optimise Mode 3-9
Remote Start and Running the Motor 3-9
Motor Stopping Definitions 3-10
Stopping the Motor 3-10

Section 4
Parameter Index 4-1
Menu Descriptions 4-1
Basic Menu 4-1
Applications Menu 4-1
Advanced Menu 4-3
Auto Features Menu 4-4
Permanent Store Menu 4-5
Password Menu 4-5
Inputs Menu 4-5
Outputs Menu 4-6
Parameters Menu 4-6
Trips Menu 4-6
Mapping to an Output Relay 4-7
Parameter Descriptions 4-8
Section 5
Troubleshooting 5-1
Safety Notice 5-1
Preliminary Checks 5-1
Power Off Checks 5-1
Electrical Noise Considerations 5-4
Relay and Contactor Coils 5-4
Control Enclosures 5-4
Special Motor Considerations 5-4
Analog Signals 5-4
Section 6
Specifications and Product Data 6-1
Identification 6-1
Three Phase Digital Soft−Start 6-1
Mounting Dimensions 6-4
Size 1 6-4
Size 2 6-5
Size 3 6-6
Size 4 6-7
Appendix A
CE Guidelines A-1
CE Declaration of Conformity A-1
EMC − Conformity and CE − Marking A-1
EMC Installation Instructions A-3
Appendix B
Parameter Values B-1
Appendix C
Replacement Parts C-1
Appendix D
Voltage Surge Protection D-1
Grounding D-1
MOV D-1
Appendix E
Remote Keypad Mounting Template E-1

Section 1
General Information

Introduction

The Baldor digital three phase multipurpose soft−starter provides reduced voltage, three phase motor starting and control over the four periods of motor operation. First, at “Start−up” (soft−start), the motor starting voltage increases from an initial preset level to full motor voltage to provide smooth motor acceleration to full speed. Second, the “Dwell” period begins when maximum motor voltage is achieved. This dwell period allows time for the motor and load to stabilize. The third period is called “Motor run” (sometimes bypass is used during this portion of the cycle). The last period is “Stop” the motor can be stopped gradually by reducing the torque (useful in pump applications).

Soft−start and soft−stop control provide an effective means to start and stop material handling equipment and pumping equipment to minimize spillage and water hammer problems. Selectable preset parameters for specific application allows simple programming.

Several product features make this digital soft−start control easy to use:

- Selectable preset parameter settings for pumps, high inertia loads, conveyors and compressors.
- Auto features simplify adjustments for optimum starting.
- Energy savings through real time power factor monitoring.
- Smooth starts and stops for impact free machine operation.
- Familiar interface, 32 character LCD Display and Keypad.
- Simple parameter access through 4 level programming.
- Quick exit from programming by using the “#” (Exit) button.
- Operating Current, Voltage and Power Factor displays.
- Fault indication and Trip Log.
- Programmable inputs and outputs.

Limited Warranty

For a period of two (2) years from the date of original purchase, BALDOR will repair or replace without charge controls and accessories which our examination proves to be defective in material or workmanship. This warranty is valid if the unit has not been tampered with by unauthorized persons, misused, abused, or improperly installed and has been used in accordance with the instructions and/or ratings supplied. This warranty is in lieu of any other warranty or guarantee expressed or implied. BALDOR shall not be held responsible for any expense (including installation and removal), inconvenience, or consequential damage, including injury to any person or property caused by items of our manufacture or sale. (Some states do not allow exclusion or limitation of incidental or consequential damages, so the above exclusion may not apply.) In any event, BALDOR’s total liability, under all circumstances, shall not exceed the full purchase price of the control. Claims for purchase price refunds, repairs, or replacements must be referred to BALDOR with all pertinent data as to the defect, the date purchased, the task performed by the control, and the problem encountered. No liability is assumed for expendable items such as fuses.
Goods may be returned only with written notification including a BALDOR Return Authorization Number and any return shipments must be prepaid.

Safety Notice

This equipment contains voltages that may be as high as 600 volts! Electrical shock can cause serious or fatal injury. Only qualified personnel should attempt the start-up procedure or troubleshoot this equipment.

This equipment may be connected to other machines that have rotating parts or parts that are driven by this equipment. Improper use can cause serious or fatal injury. Only qualified personnel should attempt the start-up procedure or troubleshoot this equipment.

PRECAUTIONS

⚠ **WARNING: Do not touch any circuit board, power device or electrical connection before you first ensure that power has been disconnected and there is no high voltage present from this equipment or other equipment to which it is connected. Electrical shock can cause serious or fatal injury.**

⚠ **WARNING: Be sure that you are completely familiar with the safe operation of this equipment. This equipment may be connected to other machines that have rotating parts or parts that are controlled by this equipment. Improper use can cause serious or fatal injury. Only qualified personnel should attempt the start-up procedure or troubleshoot this equipment.**

⚠ **WARNING: Be sure the system is properly grounded before applying power. Do not apply AC power before you ensure that all grounding instructions have been followed. Electrical shock can cause serious or fatal injury.**

⚠ **Caution: Install MOV protection for the control. See Appendix D for information.**

⚠ **Caution: Do not remove keypad cable with power applied to unit. Disconnecting the keypad cable with power applied will damage the control.**

⚠ **Caution: Shearpin trip feature is not equivalent to short circuit overcurrent protection required by NEC. Appropriate motor branch−circuit short−circuit and ground fault protection must be provided by circuit protective device.**

⚠ **Caution: Suitable for use on a circuit capable of delivering not more than the RMS symmetrical short circuit amperes listed here at rated voltage (with fuses specified in Section 2).**

Rated Amperes	RMS Symmetrical Amperes
9−59	5,000
72−242	10,000
300−500	18,000
600−750	30,000
900−1200	42,000

⚠ **Caution: Do not perform a dielectric withstand test on the motor while it is connected to the soft−start control. Failure to disconnect motor will result in extensive damage to the control. The control is tested at the factory for high voltage / leakage resistance as part of Underwriter Laboratory requirements. Do not perform a dielectric withstand test on any part of the control.**

⚠ **Caution: Do not connect power factor correction capacitors to motor terminals. If power factor correction capacitors are necessary, contact Baldor.**

⚠ **Caution: If a brake motor is used, the initial starting voltage may not be sufficient to release the brake. It may be necessary to provide separate power for the brake release coil.**

⚠ **Caution: Do not connect AC incoming line power to the Motor terminals T1, T2 and T3. Connecting AC power to these terminals may result in damage to the control.**

Section 2
Installation

Receiving, Inspection and Storage

When you receive your control, there are several things you should do immediately.

1. Observe the condition of the shipping container and report any damage immediately to the commercial carrier that delivered your control.
2. Remove the control from the carton. Inspect for shipping damage and report any damage immediately to your commercial carrier.
3. Verify that the part number of the control you received is the same as the part number listed on your purchase order.
4. If the control is to be stored for several weeks before use, be sure that it is stored in a location that is clean, dry and free from corrosives and contaminants. Storage temperature range is −25°C to 55°C.

Be sure to read an become familiar with the safety notices in Section 1 of this manual. Failure to observe the product safety notices can result in injury or equipment damage. If you have questions, please contact your Baldor distributor. Do not proceed unless you understand the installation and operation requirements and safety notices.

Physical Location

The location of the soft−start control is important. It should be installed in an area that is protected from direct sunlight, corrosives, harmful gases or liquids, dust, metallic particles, and vibration. Exposure to these elements can reduce the operating life and degrade performance of the control.

Several other factors should be carefully evaluated when selecting a location for installation:

1. For effective cooling and maintenance, the control should be mounted vertically on a flat, smooth, non-flammable vertical surface. Heat dissipation of 3.3 watts per running FLA of the motor must be provided. All factory supplied enclosures provided adequate heat dissipation with ambient temperatures to 40°C.
2. If the control is mounted in an enclosure, sufficient air flow must be provided (see Table 2-1). The fan or blower must be rated for at least 0.8 cubic feet of 30°C air per minute for each ampere of motor FLA rating.

Table 2-1 Air Flow Clearance Requirements

Soft−Start Size	**Front** inches (mm)	**Top & Bottom** inches (mm)	**Sides** inches (mm)
1	1 (25)	3 (75)	0.6 (15)
2	1 (25)	3 (75)	0.6 (15)
3	1 (25)	8 (200)	3.5 (90)

3. Keep high voltage and low voltage wiring separated. If the conduits must cross, be sure that they cross at 90° angles only.
4. Motor overload protection is required for motor branch circuits that do not have an overload protection device.
5. Front access must be provided to allow the control cover to be opened or removed for service and to allow viewing of the Keypad Display (1 inch (25mm) minimum).
6. **Altitude derating.** Up to 3300 feet (1000 meters), no derating required. Above 3300 feet, derate peak output current by 1% for each 330 feet above 3300 feet. 6600 feet (2000 meters) maximum.
7. **Temperature derating.** Up to 40°C, no derating required. Above 40°C, derate full load current by 2% per °C above 40°C.
   Maximum ambient is 60°C (at 40% derate).
8. Short circuit current and overcurrent devices are required for soft−start controls that do not have a circuit breaker or fusible disconnect switch.
9. Dust−proof NEMA 12, NEMA 4 non−ventilated enclosure will require an end of ramp Bypass contactor. This requires additional hardware. Refer to Figure 2-6 for details.

Cover Removal

Size 1

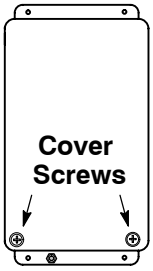

Remove Cover

1. Remove two cover screws.
2. Pull bottom of cover (held by cover screws) and lift cover off of top hinge.

Size 2

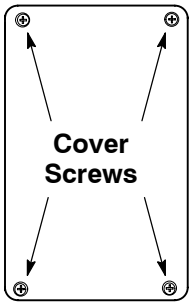

Remove Cover

1. Remove four cover screws.
2. Remove cover.

Size 3, 4

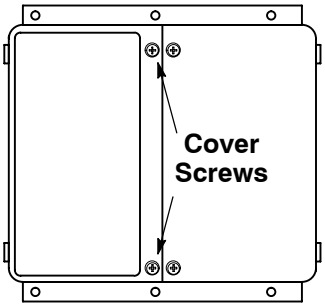

Remove Cover

1. Remove four cover screws.
2. Open cover (hinges on left side).

Inside View (Terminal Locations)

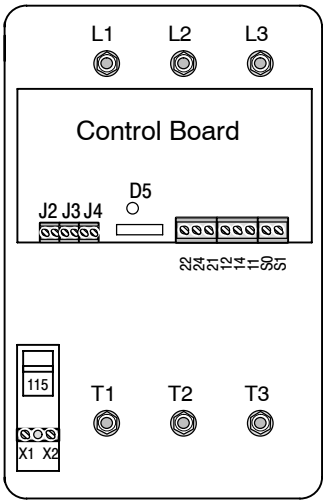

Remote Keypad Installation

Figure 2-1 Remote Keypad Board Installation

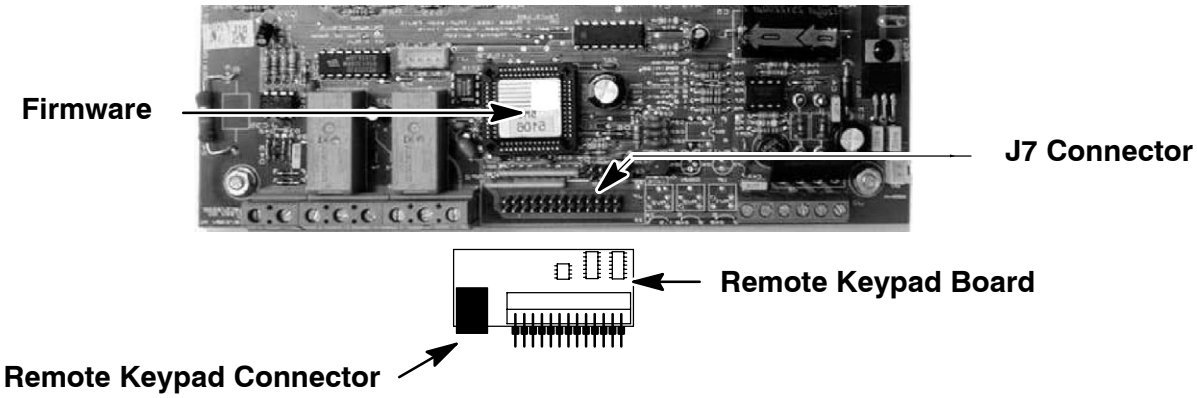

Procedure:

1. Remove cover and locate J7 connector on the control board (Figure 2-1).
2. Remove old Firmware IC and install new Firmware IC. Be careful to use removal and insertion tools and anti–static procedures.
3. Install Remote Keypad Board on the J7 connector.
4. Connect remote keypad cable at Remote Keypad Connector.
5. Install cover.
6. Refer to the following Optional Remote Keypad Installation procedure and mount the keypad.
7. Connect the keypad cable to the remote keypad.

Optional Remote Keypad Installation The keypad may be remotely mounted using optional Baldor keypad extension cable. Keypad assembly (white - DC00005A-01; gray - DC00005A-02) comes complete with the screws and gasket required to mount it to an enclosure. When the keypad is properly mounted to a NEMA Type 4X enclosure, it retains the Type 4X rating.

Tools Required:

- Center punch, tap handle, screwdrivers (Phillips and straight) and crescent wrench.
- 8-32 tap and #29 drill bit (for tapped mounting holes) or #19 drill (for clearance mounting holes).
- 1-$^{1}/_{4}$″ standard knockout punch (1-$^{11}/_{16}$″ nominal diameter).
- RTV sealant.
- (4) 8-32 nuts and lock washers.
- Extended 8-32 screws (socket fillister) are required if the mounting surface is thicker than 12 gauge and is not tapped (clearance mounting holes).
- Remote keypad mounting template. A tear out copy is provided at the end of this manual for your convenience. (Photo copy or tear out.)

Mounting Instruction: **For tapped mounting holes**

1. Locate a flat 4″ wide x 5.5″ minimum high mounting surface. Material should be sufficient thickness (14 gauge minimum).
2. Place the template on the mounting surface or mark the holes as shown.
3. Accurately center punch the 4 mounting holes (marked A) and the large knockout (marked B).
4. Drill four #29 mounting holes (A). Thread each hole using an 8-32 tap.
5. Locate the 1-$^{1}/_{4}$″ knockout center (B) and punch using the manufacturers instructions.
6. Debur knockout and mounting holes making sure the panel stays clean and flat.
7. Apply RTV to the 4 holes marked (A).
8. Assemble the keypad to the panel. Use 8–32 screws, nuts and lock washers.
9. From the inside of the panel, apply RTV over each of the four mounting screws and nuts. Cover a $^{3}/_{4}$″ area around each screw while making sure to completely encapsulate the nut and washer.

Mounting Instructions: **For clearance mounting holes**

1. Locate a flat 4″ wide x 5.5″ minimum high mounting surface. Material should be sufficient thickness (14 gauge minimum).
2. Place the template on the mounting surface or mark the holes as shown on the template.
3. Accurately center punch the 4 mounting holes (marked A) and the large knockout (marked B).
4. Drill four #19 clearance holes (A).
5. Locate the 1-$^{1}/_{4}$″ knockout center (B) and punch using the manufacturers instructions.
6. Debur knockout and mounting holes making sure the panel stays clean and flat.
7. Apply RTV to the 4 holes marked (A).
8. Assemble the keypad to the panel. Use 8–32 screws, nuts and lock washers.
9. From the inside of the panel, apply RTV over each of the four mounting screws and nuts. Cover a $^{3}/_{4}$″ area around each screw while making sure to completely encapsulate the nut and washer.

AC Main Circuit

Power Disconnect A power disconnect should be installed between the input power service and the control for a fail safe method to disconnect power.

Protective Devices Recommended fuse sizes are based on the following:
175% of maximum continuous current for time delay.
300% of maximum continuous current for Fast or Very Fast action.

Note: These general size recommendations do not consider harmonic currents or ambient temperatures greater than 40°C.

Be sure a suitable input power protection device is installed. Use the recommended circuit breaker or fuses listed in Table 2-6 (Wire Size and Protection Devices). Input and output wire size is based on the use of copper conductor wire rated at 75 °C. The table is specified for NEMA B motors.

NEC Overcurrent Protection

Circuit Breaker:	**3 phase**, thermal magnetic. Equal to GE type THQ or TEB for 230VAC or Equal to GE type TED for 460VAC and 575VAC.
Fast Action Fuses:	230VAC, Buss KTN 460VAC, Buss KTS to 600A (KTU for 601 to 1200A)
Very Fast Action:	230VAC, Buss JJN 460VAC, Buss JJS
Time Delay Fuses:	230VAC, Buss FRN 460VAC, Buss FRS to 600A (KLU for 601 to 1200A)

Main Input Contactor An IEC or NEMA rated contactor is recommended at the input power to the control. The soft–start control uses three pairs of SCR (silicon controlled rectifier) semiconductor devices that do not positively disconnect power. Figure 2-1 shows that the input contactor provides a positive disconnect.

Table 2-2 Connection Descriptions

Terminal	Description
L1, L2, L3	Input AC power terminals. Connect input isolated 3 phase supply (any phase to any terminal).
T1, T2, T3	Output Power Terminals. Connect an induction motor to these terminals. For correct motor rotation, connection of these phases must correspond with the supply connections (L1, L2, L3).
X1, X2	Control Supply Input. The internal circuits require power from a 115VAC or 230VAC source (Table 2-4). A selector switch is provided to select the voltage range of the source that is connected to this input.
S1, S0	Remote Start/Stop Input. A voltage present across these terminals will initiate a “Start”. Removing the voltage from across these terminals will initiate a “Stop”. Note that the factory setting is keypad Start/Stop.
Relay K1	Pins 11 and 12 are the normally closed “Run” relay contacts.
	Pins 11 and 14 are the normally open “Run” relay contacts.
Relay K2	Pins 21 and 22 are the normally closed “Top of Ramp” relay contacts.
	Pins 21 and 24 are the normally open “Top of Ramp” relay contacts.

UL Required Fuses for Short Circuit Rating UL requires fuses shown in Table 2-3 or equivalent semiconductor fuses rated 700VAC be used to obtain the short circuit current ratings required by UL.

Caution: **Suitable for use on a circuit capable of delivering not more than the RMS Symmetrical Amperes listed in Table 2-3, at rated voltage listed in Table 2-3, with fuses specified in Table 2-3,**

Table 2-3 UL Required Fuses for UL Short Circuit Rating

Catalog Number	Model Number	Rated Voltage (VAC)	Fuse Manufacturer			Short Circuit Rating (Amps)
			Bussman (300 KAIC) Model Number	Ferraz (200 KAIC) Model Number	Rating (Amps)	
MD7−009	SS0104	460	170M3110	6.6 URD 30 D08 A 0063	63	5,000
MD7−016	SS0105	460	170M3110	6.6 URD 30 D08 A 0063	63	5,000
MD7−023	SS0106	460	170M3112	6.6 URD 30 D08 A 0100	100	5,000
MD7−030	SS0107	460	170M3112	6.6 URD 30 D08 A 0100	100	5,000
MD7−044	SS0108	460	170M3114	6.6 URD 30 D08 A 0160	160	5,000
MD7−059	SS0109	460	170M3115	6.6 URD 30 D08 A 0200	200	5,000
MD7−072	SS0110	460	170M3116	6.6 URD 30 D08 A 0250	250	10,000
MD7−085	SS0111	460	170M3116	6.6 URD 30 D08 A 0250	250	10,000
MD7−105	SS0112	460	170M3119	6.6 URD 30 D08 A 0400	400	10,000
MD7−146	SS0113	460	170M3119	6.6 URD 30 D08 A 0400	400	10,000
MD7−174	SS0114	460	170M3121	6.6 URD 30 D08 A 0500	500	10,000
MD7−202	SS0115	460	170M3121	6.6 URD 30 D08 A 0500	500	10,000
MD7−242	SS0116	460	170M4114	6.6 URD 31 D08 A 0500	500	10,000
MD7−300	SS0117	460	170M4114	6.6 URD 31 D08 A 0500	500	18,000
MD7−370	SS0118	460	170M4116	6.6 URD 31 D08 A 0630	630	18,000
MD7−500	SS0119	460	170M6113	6.6 URD 33 D08 A 0900	900	18,000
MD7−600	SS0120	460	170M6113	6.6 URD 33 D08 A 0900	900	30,000
MD7−750	SS0121	460	170M6116	6.6 URD 33 D08 A 1250	1250	42,000
MD7−900	SS0122	460	170M6116	6.6 URD 33 D08 A 1250	1250	42,000
MD8−009	SS0131	575	170M3110	6.6 URD 30 D08 A 0063	63	5,000
MD8−016	SS0132	575	170M3110	6.6 URD 30 D08 A 0063	63	5,000
MD8−023	SS0133	575	170M3112	6.6 URD 30 D08 A 0100	100	5,000
MD8−030	SS0134	575	170M3112	6.6 URD 30 D08 A 0100	100	5,000
MD8−044	SS0135	575	170M3114	6.6 URD 30 D08 A 0160	160	5,000
MD8−059	SS0136	575	170M3115	6.6 URD 30 D08 A 0200	200	5,000
MD8−072	SS0137	575	170M3116	6.6 URD 30 D08 A 0250	250	10,000
MD8−085	SS0138	575	170M3116	6.6 URD 30 D08 A 0250	250	10,000
MD8−105	SS0139	575	170M3119	6.6 URD 30 D08 A 0400	400	10,000
MD8−146	SS0140	575	170M3119	6.6 URD 30 D08 A 0400	400	10,000
MD8−174	SS0141	575	170M3121	6.6 URD 30 D08 A 0500	500	10,000
MD8−202	SS0142	575	170M3121	6.6 URD 30 D08 A 0500	500	10,000
MD8−242	SS0143	575	170M4114	6.6 URD 31 D08 A 0500	500	10,000
MD8−300	SS0144	575	170M4114	6.6 URD 31 D08 A 0500	500	18,000
MD8−370	SS0145	575	170M4116	6.6 URD 31 D08 A 0630	630	18,000
MD8−500	SS0146	575	170M6113	6.6 URD 33 D08 A 0900	900	18,000
MD8−600	SS0147	575	170M6113	6.6 URD 33 D08 A 0900	900	30,000
MD8−750	SS0148	575	170M6116	6.6 URD 33 D08 A 1250	1250	42,000
MD8−900	SS0149	575	170M6116	6.6 URD 33 D08 A 1250	1250	42,000

Figure 2-1 Power and Motor Circuit Connections

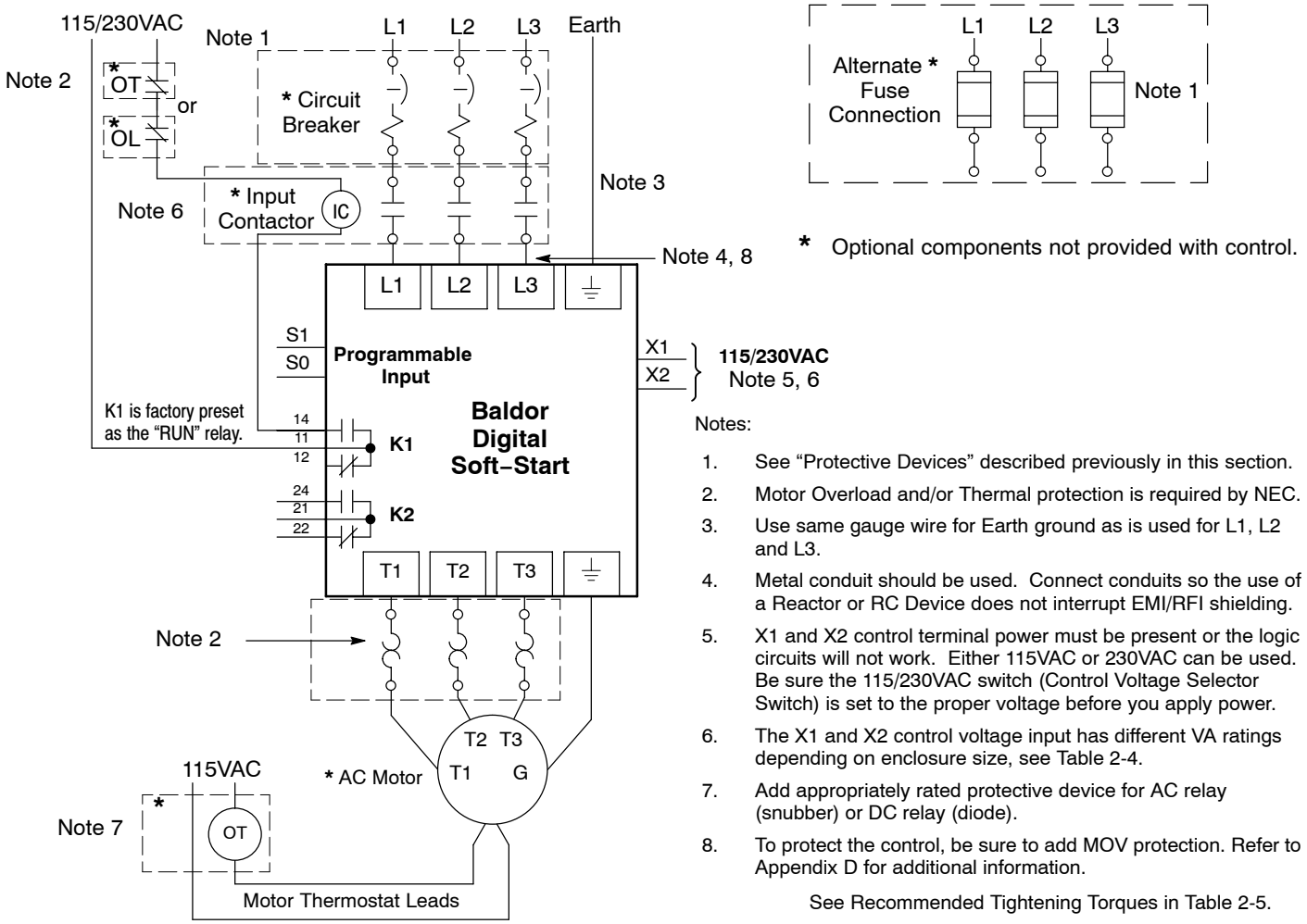

Notes:

1. See "Protective Devices" described previously in this section.
2. Motor Overload and/or Thermal protection is required by NEC.
3. Use same gauge wire for Earth ground as is used for L1, L2 and L3.
4. Metal conduit should be used. Connect conduits so the use of a Reactor or RC Device does not interrupt EMI/RFI shielding.
5. X1 and X2 control terminal power must be present or the logic circuits will not work. Either 115VAC or 230VAC can be used. Be sure the 115/230VAC switch (Control Voltage Selector Switch) is set to the proper voltage before you apply power.
6. The X1 and X2 control voltage input has different VA ratings depending on enclosure size, see Table 2-4.
7. Add appropriately rated protective device for AC relay (snubber) or DC relay (diode).
8. To protect the control, be sure to add MOV protection. Refer to Appendix D for additional information.

See Recommended Tightening Torques in Table 2-5.

All soft–starters require a separate fused 2 wire, single phase connection at terminals X1 and X2. An external fuse is required and must be sized as described in Table 2-4. Either 115VAC (98 – 126VAC) or 230VAC (196 – 253VAC) input may be used. The control voltage selector switch allows simple selection of 115VAC or 230VAC input power.

Table 2-4 Control Supply

Chassis Size	Current Rating (Amps)	Nominal Power Consumption (VA)	115V Fuse	230V Fuse
Size 1	to 23A	8VA	125mA	63mA
	30A to 44A	10VA	200mA	100mA
	59A to 146A	12VA	200mA	100mA
Size 2	174A to 370A	18VA	200mA	100mA
Size 3, 4	500A to 1200A	8VA – Control card	125mA	63mA
		140VA – separate fan supply	2A	1A

Motor Overload and Thermal Protection

NEC and local codes may require thermal motor overload protection devices be installed rather than rely only on internal protection devices. Devices such as bi–metallic overload relays may require special Soft–Start settings (such as during low voltage starting to prevent heating). Use of electronic overload relays with this control is not recommended because of the distorted current waveform. A motor with built in thermal cutoff switches (TSTAT's) is recommended.

In−Delta Connections For 6 lead motors (typical for WYE−DELTA starter replacement), the Soft−Start can be programmed (P6=1) and connected inside the delta windings.
This connection method is shown in Figure 2-2.

Note: Derating factor for soft−start is 57%.

Figure 2-2 In−Delta Soft−Start Connections

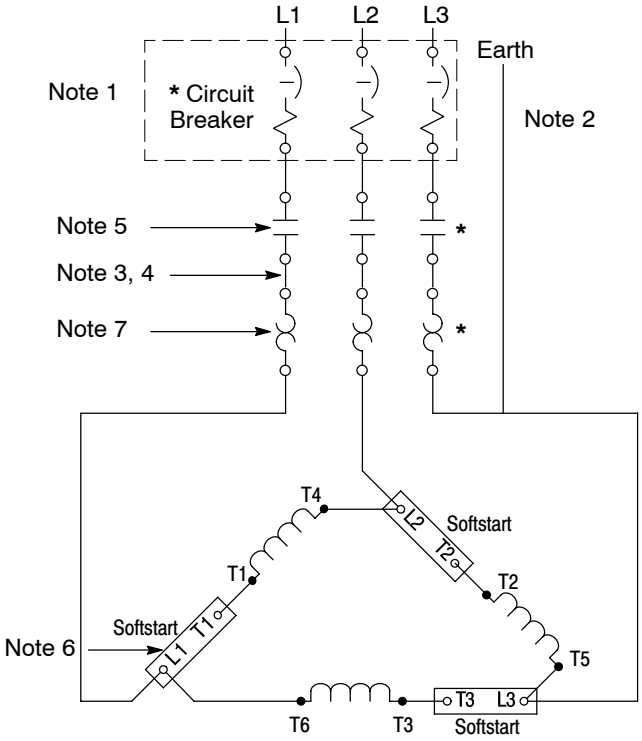

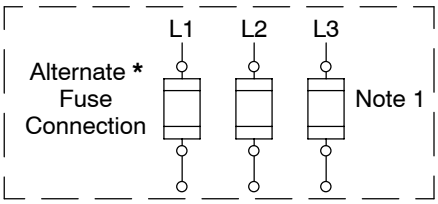

* Optional components not provided with control.

Notes:

1. See “Protective Devices” described previously in this section.
2. Use same gauge wire for Earth ground as is used for L1, L2 and L3.
3. Metal conduit should be used. Connect conduits so the use of a Reactor or RC Device does not interrupt EMI/RFI shielding.
4. To protect the control, be sure to add MOV protection. Refer to Appendix D for additional information.
5. Motor controller is required per NEC.
6. Soft Starter is not an NEC motor controller when connected as shown but becomes a part of the motor electrical circuitry.
7. Motor overload device is required per NEC.

See Recommended Tightening Torques in Table 2-5.

Fan Connections − Size 3 and 4 only Size 1 and 2 controls do not have fan connections. For Size 3 controls make the fan connections as shown in Figure 2-3.The Fan and Control voltages must be the same (both must be 115VAC or both must be 230VAC). 150VA (minimum) required.

Figure 2-3 Fan Connections

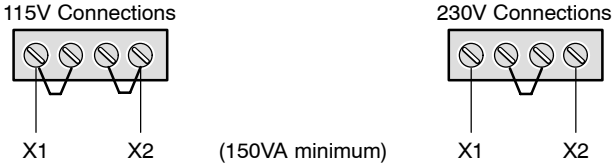

Wire Size and Protection Devices

Table 2-5 Control Wire Sizes and Tightening Torques

Control Size	Terminal	Wire Gauge *		Terminal Torque	
		AWG	mm²	Lb–in	Nm
1	L1, L2, L3, T1, T2, T3 (M8 Stud for Ring connector)	1/0	50	106	12
	Earth (Ground) Terminal (M8 Stud for Ring connector)			106	12
2	L1, L2, L3, T1, T2, T3 (M8 Stud for Ring connector)	(2) 250MCM	(2) 120	106	12
	Earth (Ground) Terminal (M8 Stud for Ring connector)			106	12
3, 4	L1, L2, L3, T1, T2, T3 ** (Connector with two M10 holes on 30mm center)	**Busbar size:** 45x20 60x10 80x10		212	24
	Earth (Ground) Terminal (M10 Stud for Ring connector)			212	24
All	S0 and S1	14 – 22	0.5 – 2.5	4.5	0.5
	X1 and X2	14 – 22	0.5 – 2.5	4.5	0.5
	K1 (11, 12, 14)	14 – 22	0.5 – 2.5	4.5	0.5
	K2 (21, 22, 24)	14 – 22	0.5 – 2.5	4.5	0.5

* Use same gauge wire for Earth ground as is used for L1, L2 and L3.

** Use terminal #4–350kcmil,1 per phase (ILSCO Part No.LO–350–S, LO–600–S or LO–1000–S or equivalent).

Table 2-6 NEC Wire Size and Protection Devices

Control Rating Amps	Input Breaker (Amps)	Input Fuse (Amps)		Wire Gauge	
		Fast Acting	Time Delay	AWG	mm²
9	15	30	20	12	3.31
16	30	50	30	12	3.31
23	40	70	40	10	5.26
30	50	90	60	8	8.37
44	70	150	80	8	8.37
59	90	200	110	6	13.3
85	110	250	150	4	21.2
105	175	350	200	2	33.6
146	250	450	275	2/0	67.4
174	275	600	300	3/0	85.0
202	300	600	350	4/0	107.0
242	400	750	450	250MCM	127.0
300	450	900	600	350MCM	177.0
370	600	1200	700	500MCM	253.0
500	800	1500	900	(2) 250MCM	(2) 127.0
600	900	1800	1100	(2) 350MCM	(2) 177.0
750	1200	2500	1400	(2) 500MCM	(2) 253.0
900	1400	3000	1600	(2) 700MCM	(2) 355.0
1100	1600		2000	(3) 700MCM	(3) 355.0
1200	1800		2000	(3) 700MCM	(3) 355.0

Note: All wire sizes are based on 75°C copper wire. Higher temperature smaller gauge wire may be used per NEC and local codes. Recommended fuses/breakers are based on 40°C ambient, maximum continuous control output current and no harmonic current.

Three Wire Control

Figure 2-4 Three Wire Control Connection

* See Figure 2-7 for alternate connection and fusing for control circuits that have more than 100VA burden.

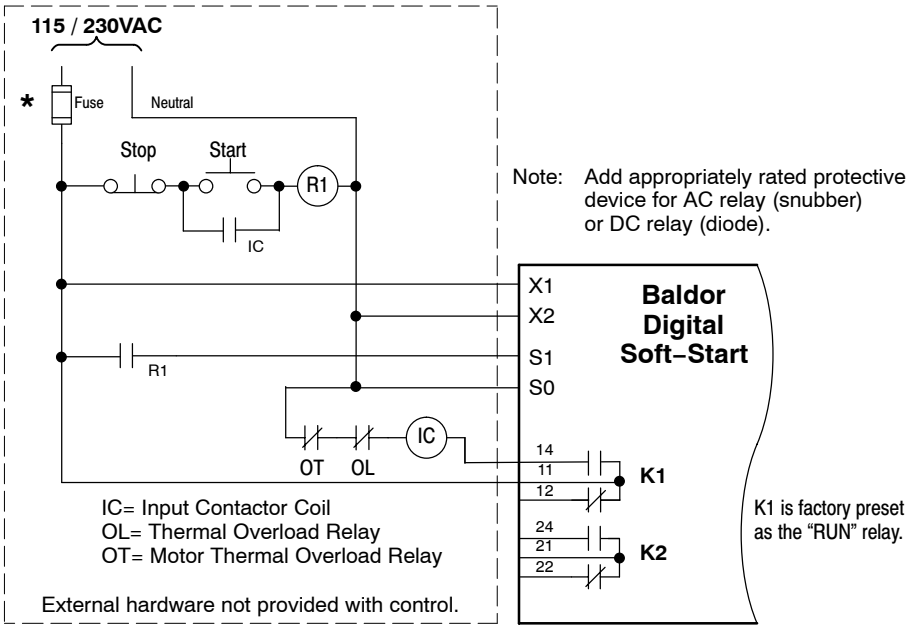

See Recommended Tightening Torques in Table 2-5.

Two Wire Control

Figure 2-5 Two Wire Control Connection

* See Figure 2-7 for alternate connection and fusing for control circuits that have more than 100VA burden.

Choose Control Circuit

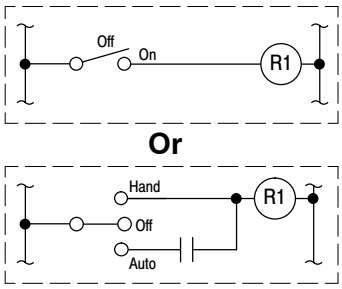

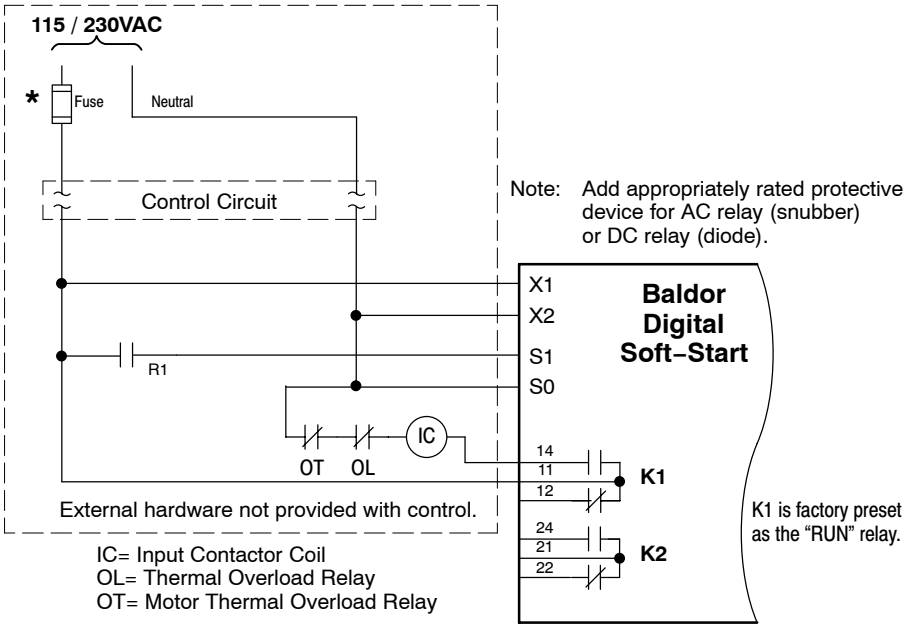

See Recommended Tightening Torques in Table 2-5.

NEMA 12/4 Installation

When a NEMA12, NEMA4, NEMA4x OR IP65 enclosure is used, a separate Top of Ramp Bypass (or shunt) contactor must be connected in parallel with the soft−start control. This will allow a solid connection of the motor to the AC power lines and eliminate the heating effect caused by the SCR's. At the completion of the start ramp (when full start voltage is obtained) a Bypass contactor is closed. This contactor is controlled by the "Top of Ramp" relay K2. This ensures that bypass will only occur when motor voltage equals the AC line voltage.

Figure 2-6 Top of Ramp (Bypass) Connection

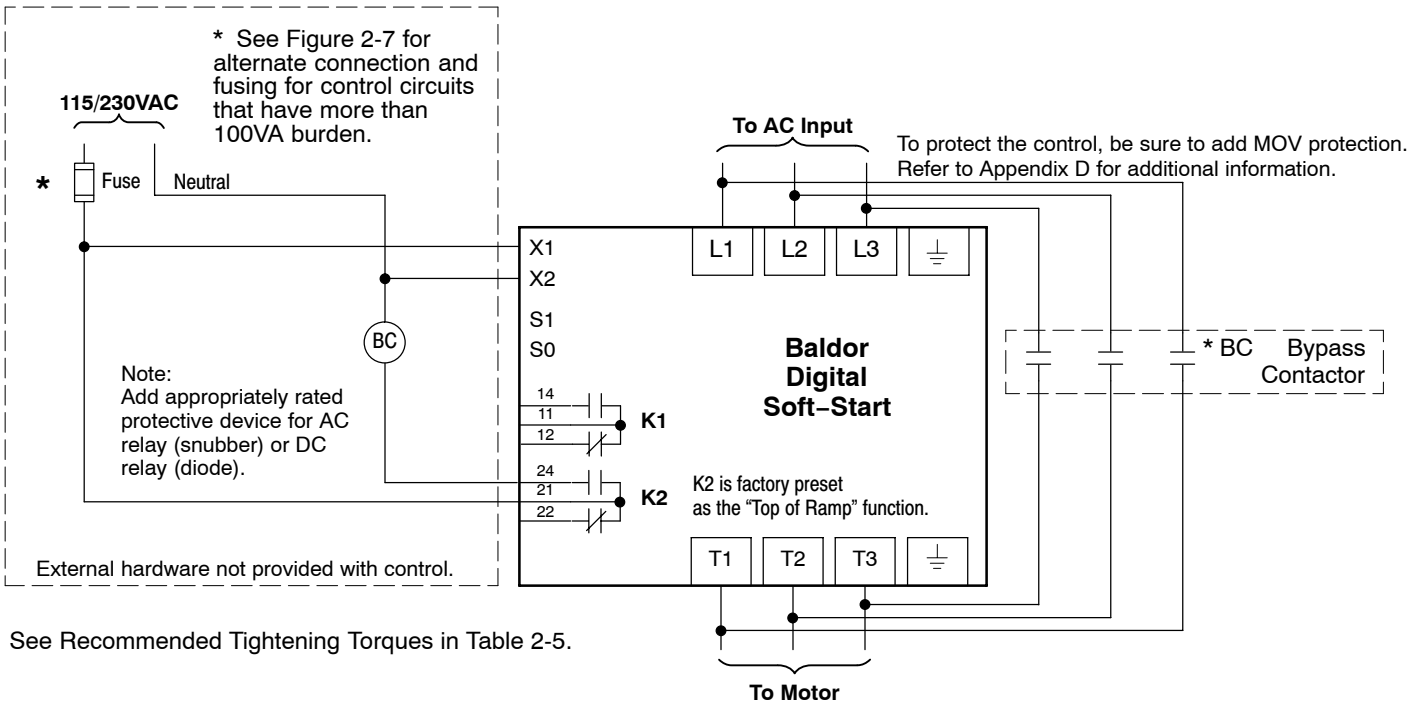

See Recommended Tightening Torques in Table 2-5.

Figure 2-7 Alternate Control Power Source Connection

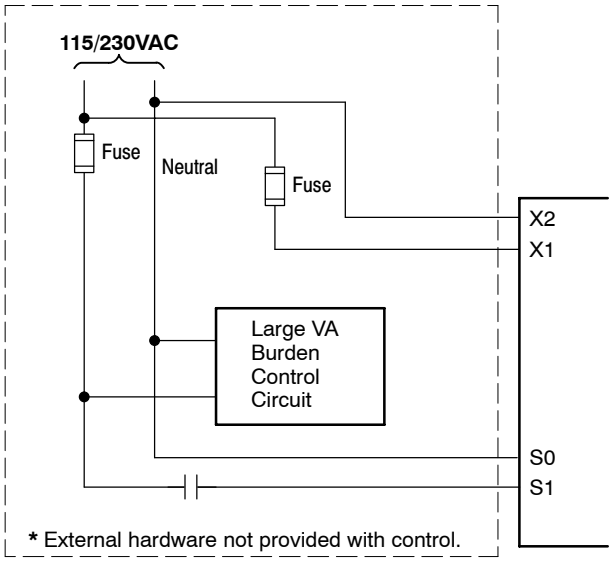

When the VA burden of the Control Circuit exceeds 100VA, a second fuse should be installed as shown. One fuse powers the Softstart control X1 and X2 terminals. The second fuse powers the external control circuit.

See Recommended Tightening Torques in Table 2-5.

Reversing Contactor For this mode, the Stop Time must be set to zero. Also, allow a minimum of 350 milli seconds between the Forward and Reverse commands.

Figure 2-8 Motor Reversing Connection

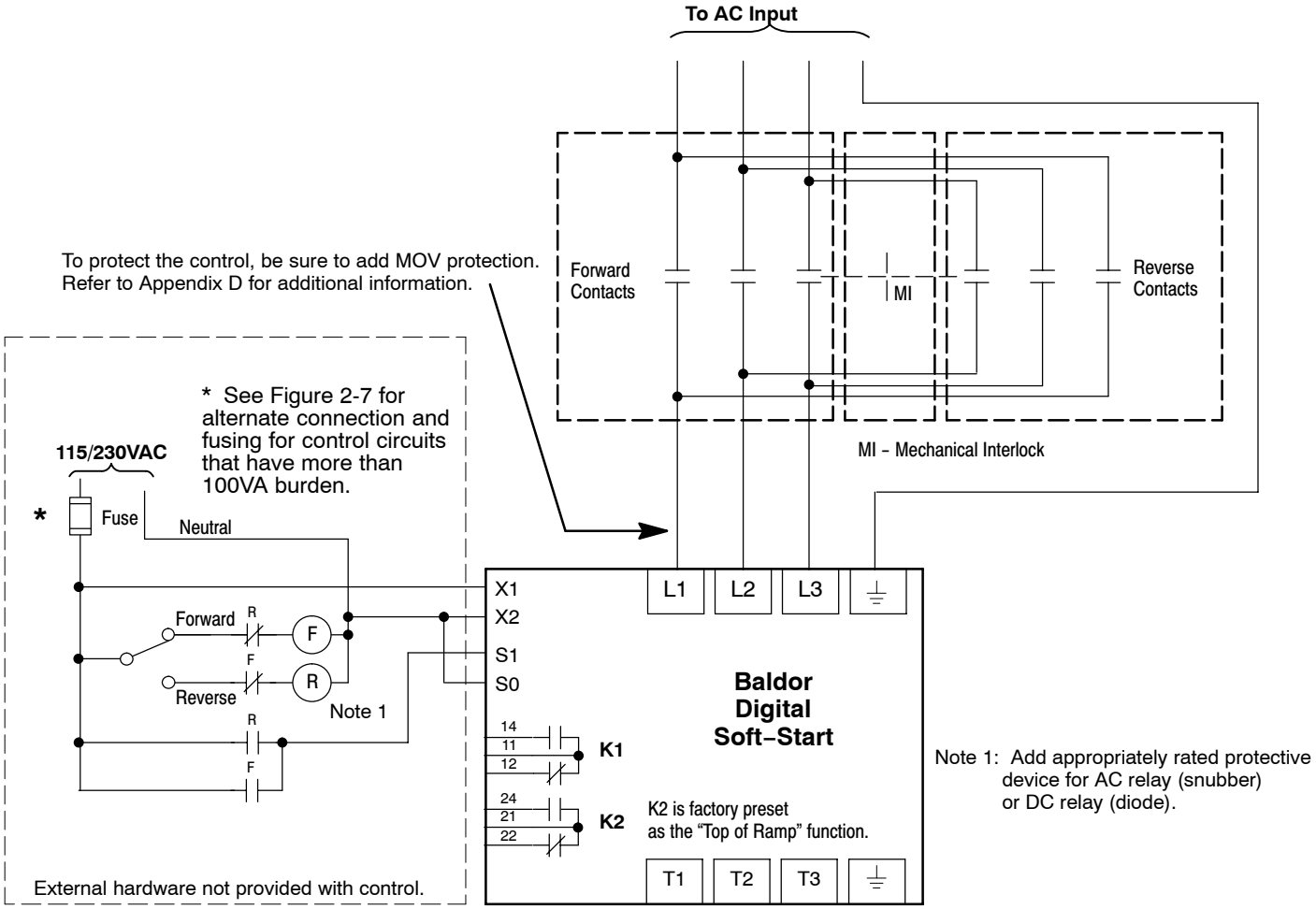

See Recommended Tightening Torques in Table 2-5.

Additional Connections J2, J3, J4

Figure 2-9 Additional Connections

J2 – Control Power Transformer Connections
J3 – Current Transformer Feedback Connections
J4 – Thermal Sensor Connection (if used)

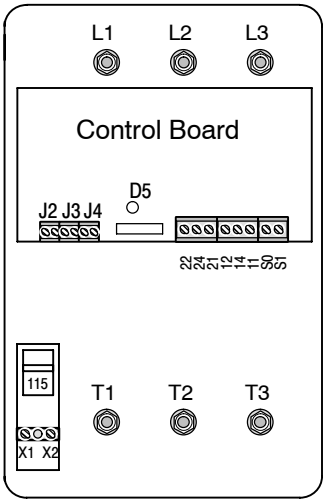

Inside View (Terminal Locations)

See Recommended Tightening Torques in Table 2-5.

Installation Procedure

1. Remove cover. (See cover removal described previously in this section.)
2. Mount the panel or enclosure to the mounting surface. The panel or enclosure must be securely fastened to the mounting surface. Refer to the mounting dimensions in Section 6 of this manual.

   Shock Mounting

   If the control will be subjected to levels of shock greater than 1G or vibration greater than 0.5G at 10 to 60Hz, the control should be shock mounted.
3. Ground the panel and control per NEC article 250 as well as state and local codes.
4. Use copper wire rated for at least 75°C. Refer to Tables 2-5 and 2-6 for wire size recommendations.
5. Connect the incoming AC power wires from the power disconnect and/or protection devices to L1, L2 and L3 terminals. Tighten each terminal as specified in Section 2 of this manual. To protect the control, be sure to add MOV protection (refer to Appendix D for additional information).
6. Connect 115VAC to the X1 and X2 terminals. This 115VAC input must be fused. Refer to Table 2-4 for ratings.
7. Be sure to set the 115/230VAC switch (Control Voltage Selector Switch) to the 115VAC position.
8. ***** Connect earth ground to the “GND” of the control. Be sure to comply with local codes.
9. Connect the motor leads to terminals T1, T2, and T3.
10. ***** Connect motor ground wire to the “GND” of the control. Be sure to comply with all applicable codes.
11. Connect the S0, S1, K1 and K2 control terminals as required for your installation.
12. Verify the input line voltage is correct.
13. Verify the Control Voltage is correct and that the selector switch is correctly set.
14. Complete any optional wiring connections that may be needed for your installation.
15. Install cover.

* Grounding by using conduit or panel connection is not adequate. A separate conductor of the proper size must be used as a ground conductor.

Section 3
Operation

Overview

The start−up procedure will help get your system up and running quickly and will allow motor and control operation to be verified. This procedure assumes that the Control and Motor are correctly installed (see Section 2 for procedures) and that you have a basic understanding of the keypad programming & operation procedures.

1. Read the Safety Notice and Precautions in section 1 of this manual.
2. Mount the control.
3. Be sure the cover is on and the keypad is plugged in but all power is OFF.
4. Connect Three Phase AC power (L1, L2, L3).
5. Connect 115VAC 1 phase power (X1, X2).

Note: Factory assembled combination and non−combination controllers and controllers in ventilated NEMA 12 enclosures have an internal transformer that provides 115VAC power to X1 and X2 terminals (pre−wired).

6. Connect the motor.

Pre−Start Checklist

Check of electrical items.

⚠ **CAUTION: After completing the installation but before you apply power, be sure to check the following items.**

1. Verify the Three Phase AC line voltage at source matches control rating.
2. Verify the X1, X2 Control Voltage at source is correct. An external fuse is required and must be sized as described in Table 2-4.
3. Verify the Control Voltage Selector Switch is correctly set.
4. Inspect all connections for accuracy, workmanship and tightness as well as compliance to codes.
5. Verify control and motor are grounded to each other and the control is connected to earth ground.
6. Check all signal wiring for accuracy.
7. Be certain all brake coils, contactors and relay coils have noise suppression. This should be an R-C filter for AC coils and reverse polarity diodes for DC coils. MOV type transient suppression is not adequate.

Check of Motors and Couplings

1. Verify freedom of motion of motor shaft.
2. Verify that the motor coupling is tight without backlash.
3. Verify the holding brakes if any, are properly adjusted to fully release and set to the desired torque value.

Start−Up Procedure

This procedure assumes that this is the first time the control and motor have been started. The normal start−up procedure would be as follows:

1. Apply X1, X2 Control Voltage power (115VAC).
2. Apply three phase power. The display should show “`Stopped & Ready`”.
3. Press ENTER and the display should show “`Applications`”.
4. Press ENTER and the display should show “`Settings`”.
5. Press the UP or DOWN Arrows and select the desired type of motor load.
6. Press ENTER and the display should briefly display loading of parameters then prompt for “`Send to Store?`”. Press ENTER to store values.

Note: Values must be saved to “Permanent Store” to be restored at power−up. See “Changing the Power−up Settings” in this section.

7. Press “#” twice to exit programming.
8. The display should show “`Stopped & Ready`”. Press “`Start/Stop`” to run the motor.

First Time Start–up (Apply X1, X2 115 volt power and become familiar with the control).

Apply X1, X2 Control Voltage power (115VAC). The backlit LCD display will illuminate and display. The control is now ready for operation.

Action	Description	Display	Comments
Apply Control Voltage (115VAC)	Keypad Display shows this opening message.	Baldor Soft Start	Logo display for 2 seconds.
	If no faults the display will show this message. *	Stopped & Ready 1:	System Status mode.
		OR	
		Starter Disabled 1: ▼ to Enable	

*Note: Starter Enable/Disable. A safety feature that disables the starter after certain actions. It is strongly recommended that before changing a parameter value, the starter should be disabled (basic menu). When disabled, the starter cannot drive the load until it is Enabled (basic menu), the AC power source is turned Off then turned On again, or the ▼ key is pressed when prompted.

Keypad Operation

On the control front panel is a keypad and display as shown in Figure 3-1.

Figure 3-1 Keypad Definition

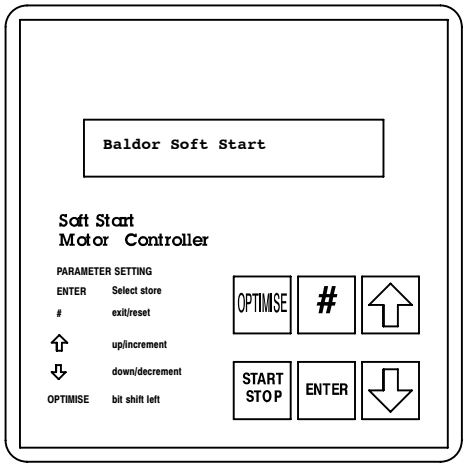

Display is a backlit 2 line x 16 character LCD display (32 character display).

Note: For keypad to be active, keypad control must be selected.

Keypad Switch	Mode		
	System Status	Program Menu	Data Entry
ENTER	Enters the Program menu.	Position in the menu structure goes forward (down) one level. (e.g. from Level 2 to Level 3).	Accepts any changes to the setting of a menu item. The new setting is flashed on the display for 2 seconds then returns to the menu mode.
#	No action	Position in the menu structure goes back (up) one level. (e.g. from Level 1 to Level 0).	Cancels any changes to the setting of a menu item. The display returns to the menu mode.
⇧	No action	Position in the menu structure goes back (up) one level.	Increments a menu item that has an analog value. Or, Sets one selected bit to Bit=1 for a menu item that requires a logical selection.
⇩	No action	Position in the menu structure goes back (up) one level. (e.g. from Level 1 to Level 0).	Decrements a menu item that has an analog value. Or, Sets one selected bit to Bit=0 for a menu item that requires a logical selection.
OPTIMISE	Selects or deselects optimizing, when motor is running.	0000 0000 Shifts left one bit position at a time.	Note: Optimise key is used as left right shift key to scroll through the bit map in parameter 18, 51, 52, 53, 54, 86, 95, 96.
Start Stop	Starts or Stops the motor.	No action	No action

Operating Modes

System Status Mode

Description	Display	Comments
If no faults the display will show this message. *	Starter Disabled 1: ▼ to Enable	System Status mode.

*Note: Starter Enable/Disable. A safety feature that disables the starter after certain actions. It is strongly recommended that before changing a parameter value, the starter should be disabled (basic menu). When disabled, the starter cannot drive the load until it is Enabled (basic menu), the AC power source is turned Off then turned On again, or the ▼ key is pressed when prompted.

Description	Display	Comments
During normal operation, the display shows the status of operation.	OPTIMIZE CURRENT 183 A	Shows that Optimized operation is selected and the load current is 183 amperes.

Menu Mode

At the power up display, press ENTER one time to go to the menu mode and display the level 1 menu.

Description	Display	Comments
In the menu mode, a flashing cursor is displayed. Use the ⇑ or ⇓ keys to scroll through the menu items. Use the ENTER key to select a menu item or move to the next level.	APPLICATIONS BASIC	☐ represents blinking cursor.

Data Entry Mode

At the menu mode, scroll to the desired parameter value you wish to change. Press enter to view or change the data. (If a blinking cursor is not present, the data is read only.)

Description	Display	Comments
In the data entry mode, a flashing cursor is displayed. Use the ⇑ or ⇓ keys to increase or decrease the value of the parameter. Use the ENTER key to save the data value. The display will flash one time if the value is accepted. The display will flash two times if the value is erroneous.	START PEDESTAL 20☐ PERCENT	☐ represents blinking cursor.

Menu Structure

Figure 3-2 Menu Structure Diagram

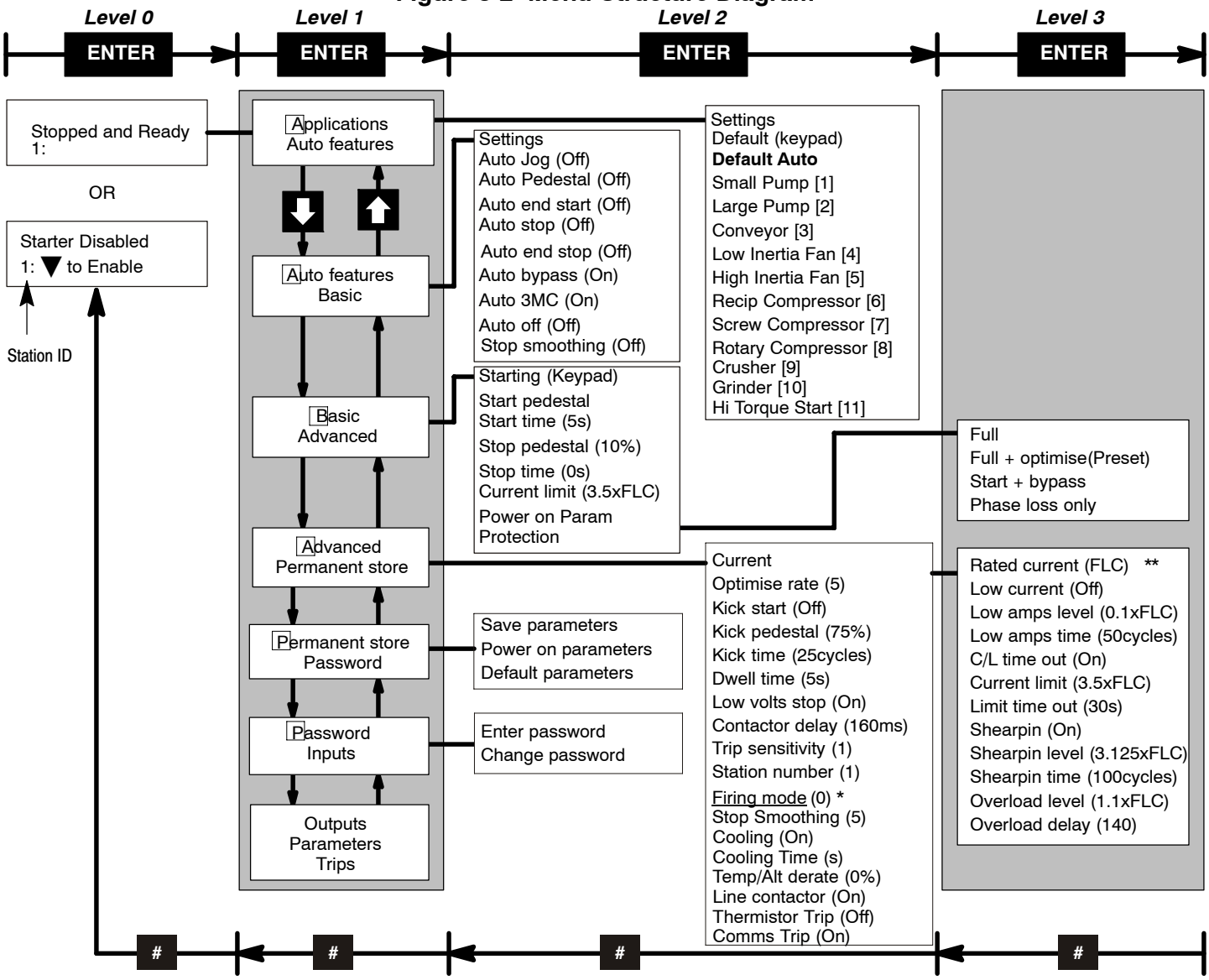

* The "Firing Mode" must be set to 1 for the In–Delta configuration.
** The "Rated Current" setting is for reference only and is not user adjustable. (Designated as Ie or FLC, Full Load Current).

Menu Navigation Examples

Menu Navigation This example shows how to go to the Inputs menu and map an input parameter.

Action	Description	Display	Comments
Apply Control Voltage (115VAC)	Keypad Display shows this opening message.	Baldor Soft Start	Logo display for 2 seconds.
	If no faults the display will show this message.	Stopped & Ready	System Status mode.
Press ENTER key		APPLICATIONS AUTO FEATURES	Press ENTER to access menu mode.
Press ⇓ key	Scroll to the AUTO FEATURES menu.	AUTO FEATURES BASIC	Press ENTER to access Basic level 2 parameters if desired.
Press ⇓ key	Scroll to the BASIC menu.	BASIC ADVANCED	Press ENTER to access Advanced level 2 parameters if desired.
Press ⇓ key	Scroll to the ADVANCED menu.	ADVANCED PERMANENT STORE	Press ENTER to access Advanced level 2 parameters if desired.
Press ⇓ key	Scroll to the PERMANENT STORE menu.	PERMANENT STORE PASSWORD	Press ENTER to access Password parameter if desired.
Press ⇓ key	Scroll to the PASSWORD menu.	PASSWORD INPUTS	Press ENTER to access Password parameter if desired.
Press ⇓ key	Scroll to the INPUTS menu.	INPUTS OUTPUTS	Press ENTER to access Password parameter if desired.
Press ENTER key	Enter level 2 of inputs menu.	DIGITAL I/P 1	
Press ENTER key	Enter level 3 of inputs menu.	MAP TO 52 PARAMETER	
Press ⇓ key	Scroll to the 52 Parameter menu.	52 PARAMETER BIT NUMBER	
Press ⇓ key	Scroll to the Bit Number menu.	BIT NUMBER POLARITY	
Press ENTER key	Enter the Bit Number menu.	BIT NUMBER 01000000 MASK	
Press OPTIMISE key	Allows you to change the value of the first bit.	BIT NUMBER 01000000 MASK	
Press OPTIMISE key	Allows you to change the value of the second bit.	BIT NUMBER 01000000 MASK	
Press OPTIMISE key	Allows you to change the value of the third bit.	BIT NUMBER 01000000 MASK	
Press ⇑ key	Allows you to change the value of the third bit.	BIT NUMBER 01100000 MASK	
Press ENTER key	Accept the change.	BIT NUMBER 01100000 MASK	
Press # key several times	Press the # key numerous times to return to the system status mode.	Stopped & Ready	System Status mode.

Setup Examples

When the Control Supply (115VAC) power is first applied, the control loads the parameter settings into working memory. You may change any of these parameters and operate a motor with the changed settings. However, if these values are not saved they will be lost the next time power is removed. You can save the new values as power−up values so they will be loaded the next time Control Supply power is turned off and turned back on.

Procedure:
Turn Control Supply power on. Use the menu's and change any parameters to the new values as desired. When all changes are made, operate the motor to ensure that all values are as desired. Then, stop the control and perform the following:

Saving Parameters

Action	Description	Display	Comments
Press ENTER key		APPLICATIONS AUTO FEATURES	Press ENTER to access menu mode.
Press ⇓ key several times	Scroll to the Permanent Store menu.	PERMANENT STORE PASSWORD	
Press ENTER key	Save the parameters to Permanent store.	SAVE PARAM POWER ON PARAM	Display will flash twice to indicate save is complete. If "Cancelled" is displayed: 1. Remove the remote run signal and repeat. 2. Disable soft start and repeat.
Press # key several times	Scroll to the Basic menu.	APPLICATIONS AUTO FEATURES	

Select Remote Starting and Stopping

Action	Description	Display	Comments
Press ENTER key		APPLICATIONS AUTO FEATURES	Press ENTER to access menu mode.
Press ⇓ key	Scroll to the Basic menu.	BASIC ADVANCED	
Press ENTER key	Enter level 2 of Basic menu.	DISABLE STARTER ENABLE STARTER	
Press ⇓ key two times	Scroll to the Starting (Keypad)	STARTING KEYPAD STARTING	
Press ENTER key	Changes to Remote Starting.	STARTING REMOTE STARTING	Press ENTER again to change to Keypad Starting, if desired.
Press # key several times	Scroll to the Basic menu.	APPLICATIONS AUTO FEATURES	

Motor Starting Definitions

Term	Definition
Starting	Selectable in Basic Menu as either Keypad or Remote starting method.
Voltage Pedestal	Initial voltage applied to motor after the 3 cycle power−up ramp. Programmed as parameter 11 or as Start Pedestal in Basic Menu.
Kick Pedestal	For traction or “frozen” loads, this boost pulse of higher voltage helps the load to start moving. Kick Start is in the Advanced menu. Kick Pedestal is parameter 13 or as Kick Pedestal in Advanced menu.
Kick Time	Number of cycles duration the kick pedestal voltage is applied. Programmed as parameter 14 or as Kick Time in Advanced menu.
Start Time	Number of seconds after the 3 cycle power−up to full motor voltage. Programmed as parameter 12 or as Start Time in Basic Menu.
Dwell Time	Number of seconds that full voltage is applied to the motor before optimizing begins (if optimizing is selected). Programmed as parameter 15 or as Dwell Time in Advanced menu.
Optimizing	Process of detecting underload condition and reducing the RMS voltage to the motor. This eliminates overflux condition of the motor windings to reduce saturation and results in substantial power savings (up to 2% efficiency increase). Optimizing is selected by the keypad or as parameter 7 or as Protection parameter in Basic Menu.
Optimizing Rate	A numerical value that represents the rate at which the motor voltage is reduced during optimizing. When this number is large, improves efficiency on stable loads. A lower number for unstable loads will reduce speed variations. Programmed as parameter P19.
Contactor Delay	A delay is required when an input contactor is energized by the soft−start “Run” relay. This delay allows bouncing contactor armature to settle during the “Closed” position. Programmed as parameter 71 or as Contactor Delay in Advanced menu.
3 Cycle Power−up	This non adjustable time is to allow voltage build up from zero to the initial pedestal. It is intended to reduce current inrush and allows for shorted SCR detection. This delay may be turned off to start a motor even with one shorted SCR or to use high inertia loads on class C or D motors. Programmed as the “Auto 3MC” parameter in Auto Features menu.

Figure 3-3 Motor Starting Key Terms

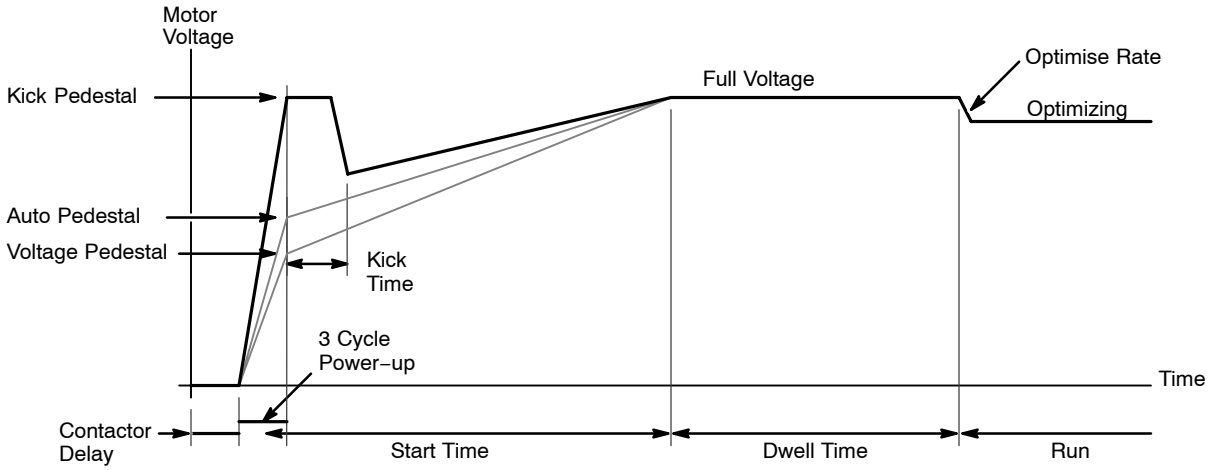

Keypad Starting and Running the Motor with Factory Settings

Action	Description	Display	Comments
Apply Control Voltage (115VAC)	Keypad Display shows this opening message.	Baldor Soft Start	Logo display for 2 seconds.
	If no faults the display will show this message.	Stopped & Ready	System Status mode.
Press ENTER key		APPLICATIONS AUTO FEATURES	
Press ENTER key	Access Level 1 Application Menu.	Settings Default (Keypad)	
Press ⇓ key two times	Scroll to the correct application.	Small Pump Large Pump	
Press ENTER key	Select the application.	Large Pump Conveyor	Large pump is selected in this example.
Press ENTER key	Choose set of parameters for the application.	Send to Store '#'=no Enter=Yes	
Press ENTER key	Scroll to the PASSWORD menu.	Storing	
Press # key twice	Press # key two times to exit programming.	Large Pump Conveyor	
Press Start/Stop key	Displays motor starting current and full voltage and current.	Starting Current 8A	
		Full volts Current 8A	

Keypad Starting and Running the Motor in Optimise Mode

Action	Description	Display	Comments
Apply Control Voltage (115VAC)	Keypad Display shows this opening message.	Baldor Soft Start	Logo display for 2 seconds.
	If no faults the display will show this message.	Stopped & Ready	System Status mode.
Press ENTER key		APPLICATIONS AUTO FEATURES	
Press ENTER key	Access Level 1 Application Menu.	Settings Default (Keypad)	
Press ⇓ key two times	Scroll to the correct application.	Small Pump Large Pump	
Press ENTER key	Select the application.	Large Pump Conveyor	Large pump is selected in this example.
Press ENTER key	Choose set of parameters for the application.	Send to Store '#'=no Enter=Yes	
Press ENTER key	Scroll to the PASSWORD menu.	Storing	
Press # key twice	Press # key two times to exit programming.	Large Pump Conveyor	
Press Start/Stop key	Displays motor starting current and full voltage and current.	Starting Current 8A	
		Full volts Current 8A	
Press OPTIMISE key		Optimising Current 4A	

Ready for Remote Start/Stop.

Baldor Digital Soft−Start offers three modes of protection during operation:

1. Full protection with full voltage after top of ramp.
2. Full optimize protection with energy optimizing by reduced voltage at lower loads.
3. Start + Bypass protection (during start only). No soft−start protection is provided when during bypass (when soft−start is shorted by the bypass contactor).

Remote Start and Running the Motor

When Remote Starting is selected, the keypad Start/Stop pushbutton is not active.

Action	Description	Display	Comments
Apply 115VAC at the input terminals S0 and S1.	Input 1 is Start/Stop input when Remote Starting is selected. (P52 Bit 16 set to terminal.)		

Motor Stopping Definitions

Term	Definition
Stop Pedestal Voltage	Stop Pedestal Voltage is the percentage of line voltage applied to the motor after a stop command. Programmed as parameter 16 or as Stop Pedestal in Basic Menu.
Stop Time	Time in seconds after a stop command to ramp down the motor voltage (Stop Time 1 or 2) Stop Time 1 with low voltage ramp active. Stop Time 2 with no low voltage ramp. Programmed as parameter 17 or as Stop Time in Basic Menu.
Stop Smoothing	Adjustable voltage ramp for smooth deceleration. Motor current is monitored and stop smoothing will continue until the Start Pedestal value is reached. Programmed as parameter
Run Voltage	Full voltage or Running Voltage
Start Pedestal Voltage	Start Pedestal Voltage – end of stop smoothing and beginning of low voltage ramp to zero volts (if low voltage ramp is active). Programmed as parameter 11 or as Start Pedestal in Basic Menu.

Figure 3-4 Motor Stopping Key Terms

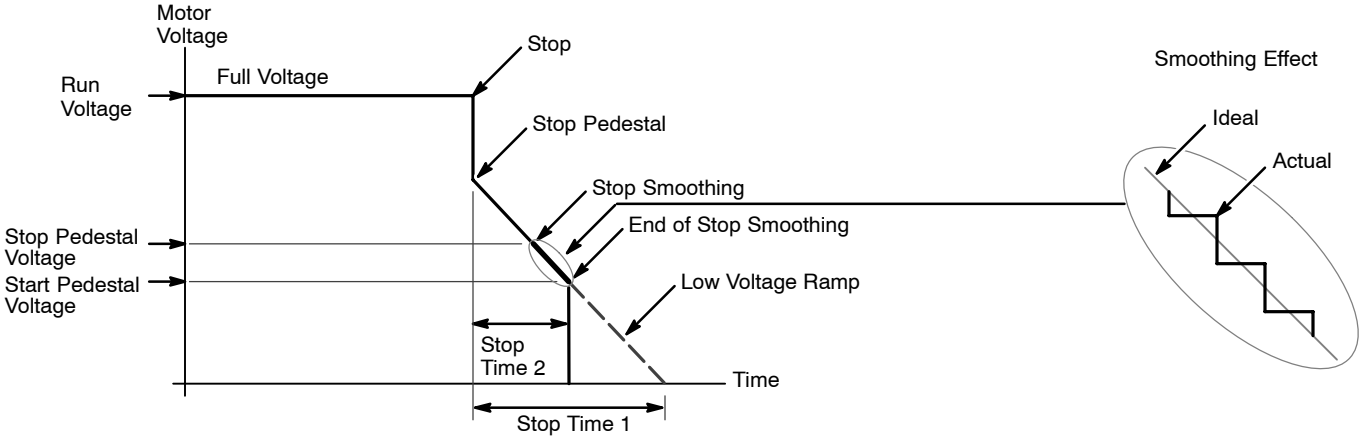

Stopping the Motor

When Remote Starting is selected, the keypad Start/Stop pushbutton is not active.

Action	Description	Display	Comments
Press Start/Stop key (Keypad Stop)	Displays motor starting current and full voltage and current.	Stopping Current 8A	Begins the Stop operation
Remove the 115VAC from S0 and S1. (Remote Stop)		Stopping Current 8A	Begins the Stop operation

Section 4
Parameter Index

Menu Descriptions

Basic Menu

Block Title	Parameter	Description
Basic	Starting	Keypad – Allows motor starting and stopping by pressing Start/Stop key on keypad. Remote – Allows motor starting and stopping by applying or removing 115VAC at terminals S0 and S1 of the control board.
	Start Pedestal	Start Pedestal Voltage – end of stop smoothing and beginning of low voltage ramp to zero volts (if low voltage ramp is active).
	Start Time	Number of seconds after the 3 cycle power–up to full motor voltage.
	Stop Pedestal	Stop Pedestal Voltage is the percentage of line voltage applied to the motor after a stop command.
	Stop Time	Time in seconds after a stop command to ramp down the motor voltage (Stop Time 1 or 2). Stop Time 1 with low voltage ramp active. Stop Time 2 with no low voltage ramp.
	Current Limit	Percentage of running current (P24 and P25). Adjustable from 100 – 800%.
	Power on Parameter	Resets all parameter values to the values at the most recent power up. Display blinks twice to confirm reset is complete.
	Protection	Full – provides shorted SCR protection during start and run, single phase protection during start, optimizing not selected. Full + Optimise – provides shorted SCR protection during start and run, single phase protection during start, optimizing is selected. Start + Bypass – provides shorted SCR protection during start, single phase protection during start, optimizing not selected and no single phase protection during run. This mode must be used with top of ramp bypass contactor. Phase Loss only – shorted SCR protection during start and run is disabled, single phase protection during start, optimizing not selected. This mode is recommended when input power noise frequently causes nuisance trips.

Applications Menu

Block Title	Parameter	Description
Applications	Settings	Display starting method, either Keypad or Remote. Also displays operating mode (Optimizing or Full Voltage).
	Default (Keypad)	Sets starting and stopping mode to keypad, resets control and restores all parameters to factory preset values.
	Small Pump [1]	Uses preset parameter values for typical small centrifugal pump. (P11, P12, P16, P17, P30 and P31 values).
	Large Pump [2]	Uses preset parameter values for typical large centrifugal pump. (P11, P12, P16, P17, P30 and P31 values).
	Conveyor [3]	Uses preset parameter values for typical conveyor. (P11, P12, P16, P17, P30 and P31 values).
	Low Inertia Fan [4]	Uses preset parameter values for Low Inertia Fan. (P11, P12, P16, P17, P30 and P31 values).
	High Inertia Fan [5]	Uses preset parameter values for High Inertia Fan. (P11, P12, P16, P17, P30 and P31 values).
	Reciprocating Compressor [6]	Uses preset parameter values for Reciprocating Compressor. (P11, P12, P16, P17, P30 and P31 values).
	Screw Compressor [7]	Uses preset parameter values for Screw Compressor. (P11, P12, P16, P17, P30 and P31 values).
	Rotary Compressor [8]	Uses preset parameter values for Rotary Compressor. (P11, P12, P16, P17, P30 and P31 values).
	Crusher [9]	Uses preset parameter values for Crusher. (P11, P12, P16, P17, P30 and P31 values).
	Grinder [10]	Uses preset parameter values for Grinder. (P11, P12, P16, P17, P30 and P31 values).
	Hi Torque Start [11]	Uses preset parameter values for High Torque Starting. (P11, P12, P16, P17, P30 and P31 values).

Applications Menu Continued

Name	Small Pump				1
Start Pedestal %	10	%	Stop Pedestal %	10	%
Start Time	5	S	Stop Time	30	S
Current Limit Level	3.5	*FLC	Current Limit Time	25	S
Optimise Rate			☑ Auto Pedestal	☐ Auto Jog	
☐ Auto End Start	☑ Auto 3MC		☑ Auto Bypass	☑ Auto Stop	
☑ Soft Stop Smoothing	☑ Low Volt SoftStop		☐ Auto ramp	☑ Auto End Stop	

Name	Large Pump				2
Start Pedestal %	10	%	Stop Pedestal %	10	%
Start Time	7	S	Stop Time	45	S
Current Limit Level	3.5	*FLC	Current Limit Time	25	S
Optimise Rate			☑ Auto Pedestal	☐ Auto Jog	
☐ Auto End Start	☑ Auto 3MC		☑ Auto Bypass	☑ Auto Stop	
☑ Soft Stop Smoothing	☑ Low Volt SoftStop		☐ Auto ramp	☑ Auto End Stop	

Name	Conveyor				3
Start Pedestal %	10	%	Stop Pedestal %	0	%
Start Time	10	S	Stop Time	7	S
Current Limit Level	3.5	*FLC	Current Limit Time	30	S
Optimise Rate			☑ Auto Pedestal	☐ Auto Jog	
☑ Auto End Start	☑ Auto 3MC		☑ Auto Bypass	☑ Auto Stop	
☐ Soft Stop Smoothing	☑ Low Volt SoftStop		☐ Auto ramp	☑ Auto End Stop	

Name	Low Inertia Fan				4
Start Pedestal %	30	%	Stop Pedestal %	0	%
Start Time	15	S	Stop Time	0	S
Current Limit Level	3.5	*FLC	Current Limit Time	30	S
Optimise Rate			☑ Auto Pedestal	☐ Auto Jog	
☑ Auto End Start	☑ Auto 3MC		☑ Auto Bypass	☐ Auto Stop	
☑ Soft Stop Smoothing	☑ Low Volt SoftStop		☐ Auto ramp	☐ Auto End Stop	

Name	High Inertia Fan				5
Start Pedestal %	40	%	Stop Pedestal %	0	%
Start Time	3	S	Stop Time	0	S
Current Limit Level	2.8125	*FLC	Current Limit Time	60	S
Optimise Rate			☑ Auto Pedestal	☐ Auto Jog	
☑ Auto End Start	☑ Auto 3MC		☑ Auto Bypass	☐ Auto Stop	
☑ Soft Stop Smoothing	☑ Low Volt SoftStop		☐ Auto ramp	☐ Auto End Stop	

Name	Reciprocating Compressor				6
Start Pedestal %	45	%	Stop Pedestal %	0	%
Start Time	3	S	Stop Time	0	S
Current Limit Level	3.5	*FLC	Current Limit Time	25	S
Optimise Rate	15		☑ Auto Pedestal	☐ Auto Jog	
☑ Auto End Start	☑ Auto 3MC		☑ Auto Bypass	☐ Auto Stop	
☐ Soft Stop Smoothing	☐ Low Volt SoftStop		☐ Auto ramp	☐ Auto End Stop	

Name	Screw Compressor				7
Start Pedestal %	40	%	Stop Pedestal %	0	%
Start Time	7	S	Stop Time	0	S
Current Limit Level	7.8125	*FLC	Current Limit Time	25	S
Optimise Rate			☑ Auto Pedestal	☐ Auto Jog	
☑ Auto End Start	☑ Auto 3MC		☑ Auto Bypass	☐ Auto Stop	
☐ Soft Stop Smoothing	☑ Low Volt SoftStop		☐ Auto ramp	☐ Auto End Stop	

Name	Rotary Compressor				8
Start Pedestal %	35	%	Stop Pedestal %	0	%
Start Time	7	S	Stop Time	0	S
Current Limit Level	3.5	*FLC	Current Limit Time	25	S
Optimise Rate			☑ Auto Pedestal	☐ Auto Jog	
☑ Auto End Start	☑ Auto 3MC		☑ Auto Bypass	☐ Auto Stop	
☐ Soft Stop Smoothing	☑ Low Volt SoftStop		☐ Auto ramp	☐ Auto End Stop	

Name	Crusher				9
Start Pedestal %	40	%	Stop Pedestal %	0	%
Start Time	3	S	Stop Time	0	S
Current Limit Level	2.8125	*FLC	Current Limit Time	60	S
Optimise Rate			☑ Auto Pedestal	☐ Auto Jog	
☑ Auto End Start	☑ Auto 3MC		☑ Auto Bypass	☐ Auto Stop	
☐ Soft Stop Smoothing	☐ Low Volt SoftStop		☐ Auto ramp	☐ Auto End Stop	

Name	Grinder				10
Start Pedestal %	40	%	Stop Pedestal %	0	%
Start Time	3	S	Stop Time	0	S
Current Limit Level	2.8125	*FLC	Current Limit Time	60	S
Optimise Rate			☑ Auto Pedestal	☐ Auto Jog	
☑ Auto End Start	☑ Auto 3MC		☑ Auto Bypass	☐ Auto Stop	
☐ Soft Stop Smoothing	☐ Low Volt SoftStop		☐ Auto ramp	☐ Auto End Stop	

Name	High Torque Start				11
Start Pedestal %	60	%	Stop Pedestal %	0	%
Start Time	3	S	Stop Time	0	S
Current Limit Level	4.375	*FLC	Current Limit Time	12	S
Optimise Rate			☑ Auto Pedestal	☐ Auto Jog	
☑ Auto End Start	☑ Auto 3MC		☑ Auto Bypass	☐ Auto Stop	
☐ Soft Stop Smoothing	☐ Low Volt SoftStop		☐ Auto ramp	☐ Auto End Stop	

Name	MG Set				12
Start Pedestal %	40	%	Stop Pedestal %	0	%
Start Time	5	S	Stop Time	0	S
Current Limit Level	2.8125	*FLC	Current Limit Time	25	S
Optimise Rate	0		☐ Auto Pedestal	☐ Auto Jog	
☐ Auto End Start	☐ Auto 3MC		☐ Auto Bypass	☐ Auto Stop	
☐ Soft Stop Smoothing	☐ Low Volt SoftStop		☐ Auto ramp	☐ Auto End Stop	

Name	Default				13
Start Pedestal %	20	%	Stop Pedestal %	0	%
Start Time	5	S	Stop Time	0	S
Current Limit Level	3.5	*FLC	Current Limit Time	60	S
Optimise Rate	5		☐ Auto Pedestal	☐ Auto Jog	
☐ Auto End Start	☑ Auto 3MC		☑ Auto Bypass	☐ Auto Stop	
☐ Soft Stop Smoothing	☐ Low Volt SoftStop		☐ Auto ramp	☐ Auto End Stop	

Name	Default Auto				14
Start Pedestal %	10	%	Stop Pedestal %	0	%
Start Time	10	S	Stop Time	0	S
Current Limit Level	5	*FLC	Current Limit Time	12	S
Optimise Rate	0		☑ Auto Pedestal	☐ Auto Jog	
☐ Auto End Start	☐ Auto 3MC		☑ Auto Bypass	☐ Auto Stop	
☑ Soft Stop Smoothing	☑ Low Volt SoftStop		☑ Auto ramp	☐ Auto End Stop	

Advanced Menu

Block Title	Parameter	Description
Advanced (Permanent Store)	Current	Rated Current – (View Only) this value is the continuous current rating of the control. Low Current – If on, activates low current trip protection. Useful to detect a low current condition (broken belt, coupling, pump etc.) on driven equipment. Low Current Level – The value of the low current trip detection. Value can be 0 to 100% of the Rated Current parameter value. Parameter 28. Low Current Time – The number of power cycles the motor current is allowed to remain below the low current level before a low current trip occurs. Value can be 5 to 255 cycles. Parameter 29. C/L Time Out – If on, allows current limit time out trip (active). Current Limit – The value of the current limit trip detection. Value can be 1 to 7.9 times the Rated Current parameter value. Parameter 30. Limit Time Out – The number of seconds Value can be 0 to 255 seconds. Parameter 31. Shearpin – If on, Shearpin protection is active. Useful to detect a high current condition (such as a jammed conveyor or press) on driven equipment. Shearpin Level – The value of the high current Shearpin trip detection. Value can be 1 to 5 times the Rated Current parameter value. Parameter 32. Shearpin Time – The number of power cycles the motor current is allowed to remain above the low shearpin level before a Shearpin trip occurs. Value can be cycles. Parameter 33. Overload Level – Provides overload protection for SCR's. (Not for motor thermal overload). The value of the overload current trip detection. Value can be 0.6 to 2 times the Rated Current parameter value. Parameter 34. Overload Delay – A numerical value that represents the time and current characteristics for overload integration. Value can be 10 to 140. Parameter 35. Note: For applications that have frequent Start/Stop sequences, it is necessary to maintain 115VAC at terminals X1 and X2. Removing 115VAC from these terminals resets the overload delay integration to 140. 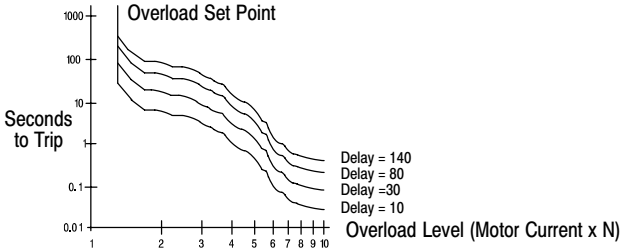
	Optimise Rate	A numerical value that represents the rate at which the motor voltage is reduced during optimizing. When this number is large, improves efficiency on stable loads. A lower number for unstable loads will reduce speed variations. Value can be 4 to 30. Parameter 19.
	Kick Start	If on, Kick Start feature is active.
	Kick Pedestal	For traction or "frozen" loads, this boost pulse of higher voltage helps the load to start moving. Value can be 60% to 90% of line voltage. Parameter 13.
	Kick Time	Number of cycles duration the kick pedestal voltage is applied. Value can be 10 to 40. Parameter 14.
	Dwell Time	Number of seconds that full voltage is applied to the motor before optimizing begins (if optimizing is selected). Value can be 1 to 255. Parameter 15.
	Low Volts Stop	Allows decel to zero volts (not just to the level of the start pedestal). (Sometimes helpful for unstable loads or regeneration).
	Contactor Delay	A delay is required when an input contactor is energized by the soft–start "Run" relay. This delay allows bouncing contactor armature to settle during the "Closed" position. Value can be 20 to 800 milliseconds. Parameter 71.
	Trip Sensitivity	A numerical value that sets the sensitivity level for all trips. A larger number provides slower response to a trip. Value can be 1 to 15. Parameter 72.

Advanced Menu Continued

Block Title	Parameter	Description
Advanced (Permanent Store) Continued	Station Number	Reserved for future use.
	Firing Mode	Sets the SCR firing mode to one of the following: (Value can be 0 to 3. Parameter 7.) 0 – Normal, 3 phase induction motor, Soft–Start conducting line current. 1 – Induction motor (Delta), Soft–Start conducting phase current. 2 – Closed loop phase control for electrical loads other than motors. Current sensing is active but current protection is disabled. 3 – Open loop phase control for electrical loads other than motors. Current sensing is disabled and current protection is disabled. 4 – Closed loop control for resistive loads with the neutral connected to the load star point. Protection is automatically set to phase loss only so system can operate with an unbalanced load. 5 – Open loop control for resistive loads with the neutral connected to the load star point. Protection is automatically set to phase loss only so system can operate with an unbalanced load. Note: Modes 2, 3, 4 and 5 are not suitable for motor loads and may damage motor and control. These modes are suitable for electrical loads such as lighting or resistive heaters.
	Stop Smoothing	Adjustable voltage ramp for smooth deceleration. Motor current is monitored and stop smoothing will continue until the Start Pedestal value is reached. Value can be 1 to 255. Parameter 122.
	Cooling	On/Off – On calculates accumulated heat when starting to protect soft starter SCR's during frequent starting.
	Cooling Time	Factory set based on current rating. Increase cooling time for frequent starts.
	Temp/Alt Derate	Derating factor for abnormal temperature or altitude conditions. The Derate % adjusts all current parameters (rated current, Current limit, shear pin level, overload delay and overload level). See derating in Section 6 of this manual.
	Line Contactor	On – Set to On ff input contactor is installed. A soft start control is not a power switching device (defined by NEC article 100) and may not be suitable to interrupt locked rotor current off high efficiency motors required by NEMA 430.82(A). Use of Line Contactor is always recommended. Off – Allows use of Input Circuit Breaker. If input circuit breaker is used, it must have a shunt trip device connected to output relay K1 or K2 which must be mapped to "Alarm" parameter 9 bit 0. Enable user flag 4, parameter 121 bit 3 or disable Line Contactor option in Advanced menu to enable breaker option.
	Thermistor Trip	On – Set to on when motor thermistor is connected to expansion board (see MN851). Off – No thermistor is installed.
	Comms Trip	Reserved for future use.

Auto Features Menu

Block Title	Parameter	Description
Auto Features	Settings	Display starting method, either Keypad or Remote. Also displays operating mode (Optimizing or Full Voltage).
	Auto Jog	If on, and Stop is commanded within 0.5 seconds of a start command the control will change to jog mode. In jog mode, the decel ramp is changed to 0 seconds. Repeatedly pushing the Start/Stop button will cause the motor to move slightly in the same direction.
	Auto Pedestal	If on, will automatically increase the voltage pedestal to start motor rotation.
	Auto End Start	If on and motor reaches full speed during ramp up, the start ramp will be terminated and full voltage will be applied to the motor.
	Auto Stop	If on, automatically activates stop smoothing if required by the load during stop for smooth deceleration of the load.
	Auto End Stop	If on, detects a stalled or stopped motor and terminates ramp down (turns SCR's off) during stop.
	Auto Bypass	If on, control detects the bypass contactor closing and automatically disables shorted SCR detection (activates shorted SCR detection when contactor opens).
	Auto 3MC	If on, reduces inrush current by allowing the motor voltage to build up from zero to the set voltage pedestal over 2 to 3 cycles. On "Sticky" or "Traction" type loads, this mode allows dynamic boost and stall sensing to start load.
	Auto Off	Off – No effect. On – changes the setting of all "Auto" parameters. If on, the parameter turns off etc.
	Stop Smoothing	If on, allows motor deceleration smoothing (see Stop Smoothing Rate, Advanced menu).

Permanent Store Menu

Block Title	Parameter	Description
Permanent Store	Save Parameters	Saves all parameter values and overwrites previously saved values.
	Power on Parameters	Restores all parameter values to the values that were last saved (last power up cycle). All parameter values changes since last power up are overwritten. Display blinks twice to confirm reset is complete.
	Default Parameters	Restores all parameter values to the factory settings. All parameter values are overwritten. Display blinks twice to confirm reset is complete.

Password Menu

Block Title	Parameter	Description
Password	Enter Password	If a password is set, it prevents unauthorized users from changing any parameter values. Value can be 0 to 255 (0=no password). If the correct password is entered, all parameters are unlocked. Parameter 5.
	Change Password	If the parameters are unlocked, a new password can be set using this option. Value can be 0 to 255 (0=no password). Parameter 5. Note: Remember your password. Removing power etc. will not clear the password. When a password is set, use Enter Password to unlock the parameters.

Inputs Menu

Block Title	Parameter	Description
Inputs	Digital i/p1	Input 1 is available at J10, terminals S1 (hot) and S0 (neutral). May be set as follows: Map to – Value can be parameter 0 – 112. Parameter 65. Bit number – Press “Optimise” to shift one position to the left. Press “⇑” to change that character to a logic 1. Press “⇓” to change that character to a logic 0. The value is stored in Parameter 66. Polarity – Value of each of the 8 I/O bits can be Positive or Inverse Logic. The value is stored in Parameter 54.
	Digital i/p2	Reserved for future use.
	Digital i/p3	Reserved for future use.
	Temperature i/p	Reserved for future use.
	4–20ma i/p	Reserved for future use.
	DC i/p	Reserved for future use.

Outputs Menu

The internal LED, four digital outputs and two analog outputs can be individually defined as desired. Each digital output can be assigned positive or inverse logic.

Block Title	Parameter	Description
Outputs	LED	Available only on size 2 and 3 controls, this Red LED can represent a variety of status conditions. The LED is located on the control board.
	K1	Relay output with Form C (1 N.O. and 1 N.C.) single pole, double throw contacts. Contacts are rated for 10Amp @ 250VAC. Parameter 57 contains the parameter number of the status parameter assigned to K1. Parameter 58 contains the bit location for the K1 output. Parameter 54 contains the polarity value for the K1 output.
	K2	Relay output with Form C (1 N.O. and 1 N.C.) single pole, double throw contacts. Contacts are rated for 10Amp @ 250VAC. Parameter 59 contains the parameter number of the status parameter assigned to K1. Parameter 60 contains the bit location for the K1 output. Parameter 54 contains the polarity value for the K1 output.
	K3	Available with optional I/O expansion board. Refer to MN851 for information.
	K4	Available with optional I/O expansion board. Refer to MN851 for information.
	Analog o/p1	Available with optional I/O expansion board. Refer to MN851 for information.
	Analog o/p2	Available with optional I/O expansion board. Refer to MN851 for information.
	Voltage o/p	Available with optional I/O expansion board. Refer to MN851 for information.

Parameters Menu

Allows quick access to parameter values. Useful to view status or change a value of any programmable parameter. Refer to Appendix B for parameter numbers and values.

Block Title	Parameter	Description
Parameters	P1 – P20	Entry point for viewing or programming parameters P1 – P20.
	P21 – P40	Entry point for viewing or programming parameters P21 – P40.
	P41 – P60	Entry point for viewing or programming parameters P41 – P60.
	P61 – P80	Entry point for viewing or programming parameters P61 – P80.
	P81 – P100	Entry point for viewing or programming parameters P81 – P100.
	P101 – P120	Entry point for viewing or programming parameters P101 – P120.
	P121 – P125	Entry point for viewing or programming parameters P121 – P125.

Trips Menu

This menu is used to view the last five fault trip conditions. Additional information about fault trips may be found in the troubleshooting section of this manual.

Block Title	Parameter	Description
Trips	1–16 External Trip	Use the "⇑" and "⇓" keys to scroll through the fault trip list. In this example, 1 = the most recent trip (5 would indicate oldest). 16 = the code for the fault trip. External Trip = the text message for the fault trip.

Mapping to an Output Relay Most status values are stored in memory as status words. The following is a list of these status words:

Parameter	Description	7 (128) 10000000	6 (64) 01000000	5 (32) 00100000	4 (16) 00010000	3 (8) 00001000	2 (4) 00000100	1 (2) 00000010	0 (1) 00000001
8	Status 1	Stopping	Energy Saving	Full Conduction	Dwell	Top of Ramp	Current Limit	Starting	Stopped
9	Status 2	4-20mA level >P46	DC I/P level >P48	Inhibit Start	Noise on Power lines	Forced Override	Stall	Overload Integrating	Alarm
10	Status 3	Red LED (Not Used)	Input 3	Input 2	Input 1	Relay K4	Relay K3	Relay K2	Relay K1
18	Auto Config (for first Param. set)	Auto Pedestal	Auto End Start	Auto Stop	Auto End Stop	Auto Jog	Auto Bypass	Auto 3MC	Auto Ramp
51	User Flag 1 (for first Param. set)	Remote Starting	Not Used	Thermistor Selector	Low Current Selector	Shearpin Selector	Overload Selector	Current Limit Timeout	Kickstart Selector
52	User Flag 2 (for first Param. set)	Zero Start Time	Second Parameter Set	Main Contactor	Remote Start/Stop	Keypad Start/Stop	Not Global Enable 2	Not Global Enable 1	Low Voltage Soft-Stop
53	User Flag 3 (for first Param. set)	Not Used	Not Used	Inhibit Restart	Inverted Controller Input	User Trip	User Current Limit	Flag Polarity 2 P101,102, 103,104	Flag Polarity 1 P97,98,99, 100
54	I/O Polarity	Red LED Polarity (Unused)	Input 3	Input 2	Input 1	Relay K4	Relay K3	Relay K2	Relay K1
86	Auto Config 2 (for 2nd Param. set)	Auto Pedestal	Auto Endstart	Auto Stop	Auto Endstop	Auto Jog	Auto Bypass	Auto 3MC	Auto Ramp
95	User Flag 1 (for 2nd Param. set)	Remote Starting	Not Used	Thermistor Selector	Low Current Selector	Shearpin Selector	Overload Selector	Current Limit Timeout	Kickstart Selector
96	User Flag 2 (for 2nd Param. set)	Zero Start Time	Second Parameter Set	Main Contactor	Remote Start/Stop	Keypad Start/Stop	Not Global Enable 2	Not Global Enable 1	Low Voltage Soft-Stop
112	Status 4	Heatsink Thermal Switch	Overload	Current Limit Timeout	Thermistor	Under Current	Shearpin	ABC Phase Sequence	60Hz
120	Status 5	Not Used	Not Used	Not Used	Not Used	Not Used	Not Used	Off Line Command Fail	Over Temperature
121	User Flag 4	Not Used	Two Stop Bits	Not Used	Not Used	Quick Ramp Time	Input Breaker Used	Auto Soft Start Smoothing	Serial Mode 2
127	Trip Flags	Not Used	Not Used	Not Used	Not Used	Not Used	Not Used	Not Used	Enable or Disable Trip 1 Phase Loss

Each parameter is an 8 bit word and is used as a bit mask.
Any bit of each word can be assigned to an output relay (K1, K2, K3 or K4).

Parameter Descriptions Version 5MC (9/3/03)

Title	P#	Parameter	Description
Parameter	P0	Dummy Parameter	Map unused bits, parameters etc.
	P1	Station Number	Unused
	P2	Country	Determines the language used by the display. 44=English.
	P3	Software Type	Manufacturers product code for the Soft-Start software.
	P4	Software Version	Version of the software.
Password	P5	Password Value	Allows you to set and enter a password.
Advanced	P6	Firing Mode	0= Normal motor (outside delta or star) 1= Delta (inside delta, no optimization) 2= Closed loop phase control 3= Open loop phase control 4= Closed loop phase control WYE connected load 5= Open loop phase control WYE connected load
Basic	P7	Protection Mode	Determines the fault protection method. 0= Input phase loss detection only. 64= Full protection with full volts after top of ramp. 128= Full protection during start then bypass (no protection) 192= Full protection + Optimization
Parameters	P8	Status 1	Definition (Preset Value, all = 0) Bit0= Stopped (1=Start/stop signal inactive, SCR's Off, Main contactor open). Bit1= Starting (1= Starter is in Start Ramp). Bit2= Current Limit (1=Motor current has reached limit and is being held). Bit3= Top of Ramp (Full volts) (1=start ramp and current limit is complete). Bit4= Dwell (1=the time at the end of the start ramp when the motor is held at full volts before optimizing to stabilize the load). Bit5= Full Conduction- (1= thyristors in continuous conduction). Bit6= Energy Saving (1=Motor pf is monitored and volts are adjusted to optimum) Bit7= Stopping (1=the stop ramp is active).
	P9	Status 2	Definition (Preset Value, all = 0) Bit0= Alarm (1=fault is detected and a trip has occurred) Bit1= Overload Integrating (1=overcurrent is detected and is integrating) Bit2= Stall (1=a stall condition is detected, motor speed decreasing). Bit3= Forced Override (1= Optimizing not available even if selected because motor current>80%FLA). Bit4= Noise (1=Noise on AC input power mains is detected). Bit5= Inhibit Start (1=Start is inhibited for a period to maintain duty cycle). Bit6= DC I/P level reached (1= DC > P48). Bit7= 4-20mA I/P level reached (1= 4-20mA > P46).
	P10	Status 3	Definition (Preset Value, all = 0) Bit0= K1 (1= K1 Active). Bit1= K2 (1= K2 Active). Bit2= K3 (1= K3 Active). Bit3= K4 (1= K4 Active). Bit4= Input 1 (1= Control Input1 is high). Bit5= Input 2 (1= Control Input2 is high). Bit6= Input 3 (1= Control Input3 is high). Bit7= Red LED status (unused)
Basic	P11	Start Pedestal	Sets the voltage level for the "Start of Voltage Ramp". Must be sufficient to allow motor to generate a breakaway torque.
	P12	Start Time	Sets the time allowed for motor voltage to equal line voltage.
Advanced	P13	Kick Pedestal	Sets the voltage level at the start of the kickstart operation.
	P14	Kick Time	Sets the number of cycles that the P13 voltage is applied. Note that for 60 Hz, 40 cycles = 667ms. For 50 Hz, 40 cycles = 800ms.
	P15	Dwell Time	Sets the dwell time allowed after top of ramp is reached.
Basic	P16	Stop Pedestal	Sets the drop in motor voltage for the "Stop Voltage Ramp" operation.
	P17	Stop Time	Sets the ramp down time for motor stopping.
Auto Features	P18	Auto Config	Auto configuration flags to use with the first parameter set. Definition (Preset Value) Bit0= Auto Ramp Bit1= Auto 3MC (1, Auto remove low volt. ramp for high start pedestal). Bit2= Auto Bypass (1, Enable Automatic Bypass Contactor detection). Bit3= Auto Jog (0, Disable auto jog detect. If 1, a stop request within .5 sec of a start request is forced to 0 stop time). Bit4= Auto Endstop (0, Do not detect stalled motor at softstop). Bit5= Auto Stop (0, Do not detect variations in pf during stop smooth stall). Bit6= Auto Endstart (0, Do not detect full speed at start and adjust start ramp). Bit7= Auto Pedestal (0, Do not detect rotation at start and adjust pedestal).
Advanced	P19	Optimise Rate	Sets the optimizing response rate. This parameter helps to stabilize small slip speed motors with low inertia loads. (4=fastest optimizing rate).

Title	P#	Parameter	Description
Parameters	P20	Reference PF (Power Factor)	The calculated power factor to optimize the control loop.
	P21	Present PF (Power Factor)	The present power factor of the motor (load).
	P22	Delay Angle (SCR OFF time)	The period (in degrees) that the thyristors are in the OFF state.
	P23	Maximum Optimizing Delay	Sets the maximum delay angle (max degrees that the thyristors are OFF) used during the optimizing mode.
	P24	Rated Current (High Byte –Hundreds)	The current rating of the soft–start set by manufacturer.
	P25	Rated Current (Low Byte – Units)	The current rating of the soft–start set by manufacturer.
	P26	Running Current Amps $\frac{(RatedCurrent) \times (7.96875)}{32}$	The load current. (Always shown as phase current).
	P27	Peak Start Current (measured at last start)	The maximum current used during the last start–up.
Advanced Current	P28	Low Current Level (undercurrent trip) (scaling = 0.03125)	Sets the under current trip level. (The low current level flag is updated even if the low current trip is disabled).
	P29	Low Current Time (delay before trip)	The number of cycles allowed for a low current level condition (P28) to exist before tripping. For 60 Hz, 40 cycles = 667ms. For 50 Hz, 40 cycles = 800ms.
	P30	Current Limit Level (scaling = 0.03125) $\frac{(RatedCurrent) \times (7.96875)}{32}$	Sets the level that the start ramp is held. (The start ramp is only held if the P30 value is reached. The current decreases as motor speed increases allowing the ramp to continue).
	P31	Current Limit Time (delay before trip)	The time allowed for start current to equal P30 value before tripping. Note that for 60 Hz, 40 cycles = 667ms. For 50 Hz, 40 cycles = 800ms.
	P32	Shearpin Level (overcurrent trip)	Sets the over current trip level. Shearpin operation begins after start–up is complete.
	P33	Shearpin Time (delay before trip)	The number of cycles allowed for an overcurrent condition before tripping (only when shearpin flag P51, Bit3=1). For 60 Hz, 60 cycles = 1second. For 50 Hz, 50 cycles = 1second.
	P34	Overload Level (SCR protection)	Sets the overload current level as a portion of FLA. (P34 is always active but P30 is only active during motor starting.)
	P35	Overload Delay (delay before trip)	The time allowed for an overload condition before tripping. For 60 Hz, 60 cycles = 1second. For 50 Hz, 50 cycles = 1second.
Parameters	P36	% Overload (status only)	The integration of the Current–Time product represented as a % of a value that was preset by the manufacturer.
	P37	Chassis Temperature	The heatsink temperature. When the temperature exceeds a threshold value, P37 value will change from <20 to >200.
	P38	Pot1	The value of RV1 on the control card. 255=fully CW setting for 5VDC input. (Not applicable for keypad operation).
	P39	Pot2	The value of RV2 on the control card. 255=fully CW setting for 5VDC input. (Not applicable for keypad operation).
	P40	Pot3	The value of RV3 on the control card. 255=fully CW setting for 5VDC input. (Not applicable for keypad operation).
	P41	DC I/P	0–12V input for load monitoring or phase angle setpoint etc.
	P42	Thermistor	Monitors the Thermistor I/P (standard motor thermistor). The values are not all that useful as thermistors act much like a switch.
	P43	4–20mA I/P	Monitors the 4 to 20mA input. Note this input is referenced to the PCB 0V and so cannot be used with daisy chained sensors.
	P44	TEMP Trip Level	The value at which Parameter 37 causes a trip.
	P45	4–20mA MAP	Value is the Parameter to which the 4–20mA data is sent.
	P46	4–20mA Set Level	Value is the level at which the 4–20mA level bit will be set.
	P47	DC Input Map	Value is parameter to which the DC input data is sent.
	P48	Set Level DC I/P	Value is the level at which the DC–I/P level bit will be set.
	P49	MAP DAC O/P 1	The value is the parameter that is the source for DAC 1 (0–10VDC).
	P50	MAP DAC O/P 2	The value is the parameter that is the source for DAC 2 (0–10VDC).

Title	P#	Parameter	Description
Parameters Continued	P51	User Flags 1	Note that these bits operate with P52 bit 6 (param group selector). This lets you set a primary and secondary group value: e.g. P14: Kick Time 1 (primary); P82: Kick Time 2 (secondary). Definition (Preset Value) Bit0= Kickstart selector (0, do not select kickstart) Bit1= Current limit timeout (1, trip on timeout) Bit2= Overload selector (1, selects overload operation) Bit3= Shearpin selector (1, selects shearpin operation) Bit4= Low current selector (0, do not select low current operation) Bit5= Thermistor selector (0, do not select thermistor operation) Bit6= Not Used Bit7= Remote input selector (1, start/stop by remote terminals) (See P52 Bit4)
	P52	User Flags 2	Definition (Preset Value) Bit0= Low voltage stop selector (0, do not select low voltage part of stop ramp) Bit1= Not global enable 1 - active low (0, not active signal from terminal) Bit2= Not global enable 2 - active low (0, not active signal from bus) Bit3= Keypad Start/Stop (0, Off)- (Available when P51 Bit7=0) Bit4= Remote Start/Stop (0, Off)- (Available when P51 Bit7=1) Bit5= Main contactor selector (0, Off)- (use with a relay) Bit6= Parameter group selector (0, Off= Group 1) Bit7= Zero Start Time (0, do not use full voltage at motor start)
	P53	User Flags 3	Definition (Preset Value) Bit0= User Flag 1 Polarity (1, positive) used with P97, 98, 99, & 100 Bit1= User Flag 2 Polarity (1, positive) used with P101, 102, 103 & 104 Bit2= User Current limit (0, do not request a start ramp hold) Bit3= User trip (0, do not request a trip) Bit4= Invert Controller Input (1, set point source input is inverted in servo loop) Bit5= Cooling Time On, Inhibit restart (0, inhibited restart control is disabled for the duration of cooling time P116) Bit6= Unused Bit7= Unused
	P54	I/O Polarity	Determines the polarity of the digital inputs and outputs. A Bit set=0; is negative logic. A Bit set=1; is positive logic. **Example:** P54, Bit0=1 (K1 mapped to Main Contactor), P57=52, P58=00100000 P52, Bit 5=1 will cause K1 to close. Definition (Preset Value) Bit0= Relay K1 (1, positive) Bit1= Relay K2 (1, positive) Bit2= Relay K3 (1, positive) Bit3= Relay K4 (1, positive) Bit4= Control Input 1 (1, positive) Bit5= Control Input 2 (1, positive) Bit6= Control Input 3 (1, positive) Bit7= Led (RED) Unused
	P55	MAP LED	Unused
	P56	LED MASK	Unused
	P57	Map K1 To (Parameter)	The parameter number that will control Relay K1. The preset is P52: User Flags 1–2. (P57 operates with P58). (Mapped to means electronic transfer of the analog value.)
	P58	K1 Bit Mask (P57 bit selected for K1)	Sets the bit in the parameter selected by P57 that operates the relay K1 on the control card. The preset is P52:User Flags 1–2, Bit5 (main contactor). (P58 operates with P57). 7 6 5 4 3 2 1 0 Bits 1 0 0 0 0 0 0 0 0 1 0 0 0 0 0 0 0 0 1 0 0 0 0 0 (Preset) 0 0 0 1 0 0 0 0 0 0 0 0 1 0 0 0 0 0 0 0 0 1 0 0 0 0 0 0 0 0 1 0 0 0 0 0 0 0 0 1
	P59	Map K2 To (Parameter)	The parameter number that will control Relay K2. The preset is P8: Status 1. (P59 operates with P60). (Mapped to means electronic transfer of the analog value.)

Title	P#	Parameter	Description
Parameters Continued	P60	K2 Bit Mask (P59 bit selected for K2)	Sets the bit in the parameter selected by P59 that operates the relay K2 on the control card. The preset is P8:Status 1, Bit3 (Top of Ramp or Full Volts). (P60 operates with P59). 7 6 5 4 3 2 1 0 Bits 1 0 0 0 0 0 0 0 0 1 0 0 0 0 0 0 0 0 1 0 0 0 0 0 0 0 0 1 0 0 0 0 0 0 0 0 1 0 0 0 (Preset) 0 0 0 0 0 1 0 0 0 0 0 0 0 0 1 0 0 0 0 0 0 0 0 1
	P61	MAP K3 TO (Parameter)	Value is the destination parameter number for the K3 bit. Parameter 62 is the mask for P61 (Map K3 To).
	P62	K3 BIT MASK	Parameter 62 is the mask for P61 (Map K3 To).
	P63	MAP K4 TO (Parameter)	Value is the destination parameter number for the K4 bit. Parameter 64 is the mask for P63 (Map K4 To).
	P64	K4 BIT MASK	Parameter 64 is the mask for P63 (Map K4 To).
	P65	Map I/P1 To (Parameter)	The parameter number that will control Input 1 on the control card. The preset is P52: User Flags 1–2. (Parameter 66 is the mask for P65, Map I/P1 To). (Mapped to means electronic transfer of the analog value.)
	P66	I/P1 Bit Mask (P65 bit selected for I/P1)	Sets the bit in the parameter selected by P65 that operates Input 1 of the control card. The preset is P52:User Flags 1–2, Bit4 (Board Start/Stop). (Parameter 66 is the mask for P65, Map I/P1 To). 7 6 5 4 3 2 1 0 Bits 1 0 0 0 0 0 0 0 0 1 0 0 0 0 0 0 0 0 1 0 0 0 0 0 0 0 0 1 0 0 0 0 (Preset) 0 0 0 0 1 0 0 0 0 0 0 0 0 1 0 0 0 0 0 0 0 0 1 0 0 0 0 0 0 0 0 1
	P67	Map I/P2 To (Parameter)	The parameter number that will control Input 2 on the control card. The preset is P0. (Parameter 68 is the mask for P67, Map I/P2 To). (Mapped to means electronic transfer of the analog value.)
	P68	I/P2 Bit Mask (P67 bit selected for I/P2)	Parameter 68 is the mask for P67, Map I/P2 To.
	P69	Map I/P3 To (Parameter)	The parameter number that will control Input 3 on the control card. The preset is P0. (Parameter 70 is the mask for P69, Map I/P3 To). (Mapped to means electronic transfer of the analog value.)
	P70	I/P3 Bit Mask (P69 bit selected for I/P3)	Parameter 70 is the mask for P69, Map I/P3 To.

Title	P#	Parameter	Description
Advanced Current	P71	Contactor Delay (after start command)	Sets the delay time between the request to actuate K1 and the start of firing the thyristors.
	P72	Trip Sensitivity	1-15; 1 (most sensitive), 15 (least sensitive, slowest to trip)
	P73	Last Trip (Most Recent Trip)	P73 stores the most recent trip code for the most recent fault. Trip code definitions are as follows: 0 Not Used 1 Phase Loss Fault. One or phases of the incoming three phase AC power is missing. Check fuses etc. 2 Thermal Switch Fault. A thermal switch (fan cooled units only) detected an over temperature condition. P51 (or P95) bit 5 enabled. 3 * Thyristor Signal Fault. Thyristor control signal fault. 4 * Thyristor Firing Fault. One or more thyristors not firing. 5 * Thyristor Signal Fault. Thyristor control signal fault. 6 * Thyristor Signal Fault. Thyristor control signal fault. 7 * Thyristor Sensing Signal Fault. 8 * Thyristor Sensing Signal Fault. 9 * Thyristor Sensing Signal Fault. 10 * Thyristor Short Circuit. Thyristor shorted across the poles. 11 Under Current Fault. When "Top of Ramp" is reached, P28 (or P87) Low Current Level and P29 (or P88) Low Current Time become active. If P51, Bit 4 is enabled, a fault will occur if the output current is less than P28 for longer than the P29 time period. 12 Current Limit Fault. During start-up, P30 (or P89) Current Limit Level and P31 (or P90) Current Limit Time are active. If P51, Bit 1 is enabled, a fault will occur if the output current exceeds P30 for longer than the P31 time period. 13 Overload Fault. During normal operation, P34 (or P93) Overload Level and P35 (or P94) Overload Delay are active. If P51, Bit 2 is enabled, a fault will occur if the output current is equal to or greater than P34 for longer than the P35 time period. 14 Shearpin Fault. When "Top of Ramp" is reached, P32 (or P91) Shearpin Level and P33 (or P92) Shearpin Time become active. If P51, Bit 3 is enabled, a fault will occur if the output current is greater than P32 for longer than the P33 time period. 15 Thermistor Fault. Motor is overtemperature. 16 External Trip. * Contact Baldor if this fault occurs.
Parameters	P74	2nd Last Trip	P74 stores the trip code for the fault previous to P73. See P73 for definitions.
	P75	3rd Last Trip	P75 stores the trip code for the fault previous to P74. See P73 for definitions.
	P76	4th Last Trip	P76 stores the trip code for the fault previous to P75. See P73 for definitions.
	P77	5th Last Trip (Oldest trip)	P77 stores the trip code for the fault previous to P76. See P73 for definitions.
	P78	Protection Mode 2 (trips or 2nd param set)	Determines the fault protection method 0= Input phase loss detection only. 64= Full protection with full volts after top of ramp. 128= Full protection during start then bypass (no protection) 192= Full protection + Optimization
	P79	Start Pedestal 2 (for 2nd param set)	Sets the voltage level for the "Start of Voltage Ramp". Must be sufficient to allow motor to generate a breakaway torque.
	P80	Start Time 2 (for 2nd param set)	Sets the time allowed for motor voltage to equal line voltage.
	P81	Kick Pedestal 2 (for 2nd param set)	Sets the voltage level at the start of the kickstart operation.
	P82	Kick Time 2 (for 2nd param set)	Sets the number of cycles that the P81 voltage is applied. Note that for 60 Hz, 40 cycles = 667ms. For 50 Hz, 40 cycles = 800ms.
	P83	Dwell 2 (for 2nd param set)	Sets the dwell time allowed after top of ramp is reached.
	P84	Stop Pedestal 2 (for 2nd param set)	Sets the drop in motor voltage for the "Stop Voltage Ramp" operation.
	P85	Stop Time 2 (for 2nd param set)	Sets the ramp down time for motor stopping.

Title	P#	Parameter	Description
Parameters Continued	P86	Auto Config 2 (for 2nd param set) Auto configuration flags for the second parameter set.	Definition (Preset Value) Bit0= Unused Bit1= Auto 3MC (1, enable auto removal of low voltage ramp for high start pedestals) Bit2= Auto Bypass (1, enable automatic bypass contactor detection). Bit3= Auto Jog (0, disable jog detection. If enabled a stop request within 0.5 second of a start request is forced to 0 stop time). Bit4= Auto Endstop (0, disabled. If enabled detect a stalled motor during softstop and turn off thyristors). Bit5= Auto Stop (0, do not detect variations in pf during stop smooth stall). Bit6= Auto Endstart (0, disable detection of full speed during start and end of start ramp) Bit7= Auto Pedestal (0, disable detection of motor rotation at start with pedestal adjustment).
	P87	Under Current 2 (for 2nd param set)	Sets the under current trip level.
	P88	Under Current Time 2 (for 2nd param set)	The time allowed for a low current level condition (P87) to exist before tripping. For 60 Hz, 40 cycles = 667ms. For 50 Hz, 40 cycles = 800ms.
	P89	Current Limit 2 (for 2nd param set)	Sets the motor starting current.
	90	(for 2nd param set)	The time allowed for start current to equal P89 value before tripping. Note that for 60 Hz, 40 cycles = 667ms. For 50 Hz, 40 cycles = 800ms.
	91	Shearpin 2 (for 2nd param set)	Sets the over current trip level. Shearpin operation begins after start–up is complete.
	92	(for 2nd param set)	The number of cycles allowed for an overcurrent condition before tripping (only when shearpin flag P95, Bit3=1). For 60 Hz, 60 cycles = 1second. For 50 Hz, 50 cycles = 1second.
	93	(for 2nd param set)	Sets the overload current level as a portion of FLA. (P93 is always active but P89 is only active during motor starting.)
	94	(for 2nd param set)	The time allowed for an overload condition before tripping. For 60 Hz, 60 cycles = 1second. For 50 Hz, 50 cycles = 1second.
	95	User Flags 1 (for 2nd param set)	Note that these bits operate with P96 bit 6 (param group selector). This lets you set a primary and secondary group value. Definition (Preset Value) Bit0= Kickstart 2 (0, Off) Bit1= Current limit selector 2 (1, On) Bit2= Overload selector 2 (1, On) Bit3= Shearpin selector 2 (0, Off) Bit4= Low current selector 2 (0, Off) Bit5= Thermistor selector 2 (0, Off) Bit6= Unused Bit7= Remote starting 2 (1=P96 Bit4) (If 0, 0=P96 Bit 3)
	96	User Flags 2 (for 2nd param set)	Definition (Preset Value) Bit0= Low voltage Softstop (0, Off) Bit1= Not global enable 1(2) (0, Off) Bit2= Not global enable 2(2) (0, Off) Bit3= Keypad Start/Stop 2 (0, Off)– (Available when P95 Bit7=1) Bit4= Remote Start/Stop (0, Off)– (Available when P95 Bit7=0) Bit5= Main contactor 2 (0, Off)– (use with a relay) Bit6= Second Parameter Set 2 (1, On= Group 2) Bit7= Zero Start time 2 (0, Off)
	97	Flag1 I/P Source Address	Address of source flag parameter. (Parameter 98 is the mask for P97.)
	98	Flag1 I/P Source Mask	The bit mask for source flag parameter.
	99	Flag1 O/P Destination Address	Address of destination flag parameter. (Parameter 100 is the mask for P99.)

Title	P#	Parameter	Description
Parameters Continued	100	Flag1 O/P Destination Mask	The bit mask for destination flag parameter.
	101	Flag2 I/P Source Address	Address of source flag parameter. (Parameter 102 is the mask for P101.)
	102	Flag2 I/P Source Mask	The bit mask for source flag parameter.
	103	Flag2 O/P Destination Address	Address of destination flag parameter. (Parameter 104 is the mask for P103.)
	104	Flag2 O/P Destination Mask	The bit mask for destination flag parameter.
	105	Loop Input	The parameter number used as the source for control loop setpoint.
	106	Loop Feedback	The parameter number used as the source for control loop feedback.
	107	Error Gain	Multiplier for the control loop error signal.
	108	Error Divisor	Divisor for the control loop error signal.
	109	Max Slope	The maximum allowed single error in open loop.
	110	Guard Gap	The minimum allowed firing delay in both open loop and phase control modes. This allows for jitter and power factor of the load.
	111	User Parameter	This parameter may be set by the user by the serial link.
	112	Status 4	Definition (Preset Value, all = 0) Bit0= The unit is using 60Hz parameters Bit1= The phase rotation detected at start (ABC Sequence) Bit2= Indicates current is greater than shearpin level Bit3= Indicates current is less than under current level Bit4= Thermistor is overtemperature or I/P's are open circuit Bit5= Current limit has timed out Bit6= Overload has passed trip level Bit7= Heatsink temperature is greater than max allowed
	113	Drive Type	Unused
	114	Soft Switch Off	Unused
	115	Selected Application	Value selected from application table.
	116	Cooling Time (restart not allowed)	Cooling Time. Number of seconds after stop that restart is not allowed. (Protects SCR's for large loads.)
	117	Command Source	Unused
	118	Motor Rated Current	Specifies motor rated current (FLC) as a percentage of the soft start full load current (50 to 100%)
	119	Preset Parameter Number to Display	Unused
	120	Status 5	Definition (Preset Value) Bit0= Thermal Switch 2 Over temp. Prevents re-start if set. (0, Off) Bit1= Off Line Command Failure
	121	User Flags 4	Definition (Preset Value) Bit0= Serial Mode 2 Bit1= Auto Soft Start Smoothing Bit2= Input Breaker used Bit3= Quick Ramp Time Bit6= Two Stop Bits
	122	Soft–Start Smoothing	Sets the amount of soft–start smoothing. This parameter helps stabilize jitter caused by unstable loads.
	123	Temperature/Altitude Derate	% derate for Current limit, Shear Pin level, Overload Delay, Overload Level. Only applied when application is loaded.
	124	Off Line Command	1=Disable, 2=Enable, 3=Bus Starting, 4=Remote Starting, 5=Reset Starter, 6=Reset Trip, 7=Bus Start, 8=Bus Stop, 9=Load EEROM from defaults, 10=Load RAM from EEROM, 11=Save RAM to EEROM
	125	BUS Baud Rate	0=9600, non–zero=15625
	126	BUS Action Fail	0=no trip, 1=trip (after bus failure)
	127	Not Used.	

Section 5
Troubleshooting

Safety Notice

Be sure to read and understand all notices, warning and caution statements in Section 1 of this manual. If you have any questions about the safe operation of this equipment, please contact your Baldor representative before you proceed.

Preliminary Checks

In the event of trouble, disconnect all input power to the control and perform these preliminary checks.

Power Off Checks

1. Check all connections for tightness and signs of overheating.
2. Check for cracked or damaged insulators and terminal blocks.
3. Ensure the correct setting of the overload relay.
4. Check the 115VAC input power.
5. If one or more SCR's should be replaced, contact Baldor.

Table 5-1 Fault Trip Messages

This menu is used to view the last five fault trip conditions. Additional information about fault trips may be found in the troubleshooting section of this manual.

Note: The control is shipped with five fault messages in the log (P73–P77). The last message is "External Trip". There is no software method to clear the fault log.

Block Title	Parameter	Description
Trips	1 16 External Trip	Use the "⇑" and "⇓" keys to scroll through the fault trip list. In this example, 1 = the most recent trip (5 would indicate oldest). Parameters P73 to P77. 16 = the code for the fault trip. External Trip = the text message for the fault trip. **16 error conditions that cause a fault trip to occur are: (E1 – E16)** 1 – Phase loss. This is a start–up protection fault that indicates single phase power at the AC input. This error can also indicate phase unbalance or undervoltage (low voltage). 2 – Too Hot. Heat sink temperature exceeded limit. Possible causes are overload, frequent starting, poor ventilation, excessive dirty on heat sink, high ambient temperature or high humidity. 3 – SCR Signal. Excessive electrical noise on input power lines. 4 – SCR Firing. SCR's are not responding to firing commands. May be a result of a failed control board, voltage spikes on power lines, noise, loose connections or SCR failure. 5 – SCR Signal. Excessive electrical noise on input power lines. 6 – SCR Signal. Excessive electrical noise on input power lines. 7 – SCR Sensing. Loss of the sensing signal from an SCR. May be a result of a failed SCR, loss of phase current when running, undervoltage or phase unbalance when running. 8 – SCR Sensing. Loss of the sensing signal from an SCR. May be a result of a failed SCR, loss of phase current when running, undervoltage or phase unbalance when running. 9 – SCR Sensing. Loss of the sensing signal from an SCR. May be a result of a failed SCR, loss of phase current when running, undervoltage or phase unbalance when running. 10 – SCR Shorted. Shorted SCR is detected. If not using input contactor, it is recommended that you map this fault to an output relay to trip the circuit breaker if the error occurs. When one phase is shorted, motor can be stopped. However, when two or three phases are shorted, the motor cannot be stopped without the input contactor. 11 – Low Current. Motor current is less than full load current level (broken belt or coupling). 12 – C/L Timeout. Motor current exceeded current limit value. Voltage was reduced to limit output current but it still exceeded limit for longer than allowed. 13 – Overload. Provides overload protection for SCR's. (Not for motor thermal overload). The value of the overload current trip detection was exceeded. 14 – Shearpin. The value of the high current Shearpin trip detection has been exceeded. 15 – Thermistor. Optional with I/O expansion board. Refer to MN851 for information. 16 – External Trip. Optional with I/O expansion board. Refer to MN851 for information. 17 – Drive is not communicating with the Keypad. Communications timeout. Possible causes are: X1X2 power not applied before Start command issued (S0S1); Low voltage at X1X2 input; or Keypad cable disconnected or not secure. X1X2 power should be permanent power (not cycled or have a disconnect).

Table 5-2 Troubleshooting Guide

INDICATION	CORRECTIVE ACTION
Unit fails to start	**LED's on control card are OFF and no error messages displayed:** 1. Verify that 115VAC is present at X1 and X2 terminals. 2. Verify that 9VAC is present at terminal J2 (see Section 2 cover removal). **Green power LED is ON and no error messages displayed:** 1. Control board or other component may be defective. Contact Baldor.
Unit trips during start	1. Check parameter 73 (last trip) error code and isolate source of problem (see Table 5-1). 2. Verify that all three phases of AC input power and motor power are present (no missing phases). 3. If input contactor is used, verify AC input power is present at L1, L2 and L3 before the contactor delay time is complete. If the SCR's fire before AC power is present, the "Phase Loss" message is displayed and unit will trip. 4. Verify all connections at the SCR gate connections. (Resistance check: with all power removed, the resistance between adjacent Red & Yellow wires at the control card connections can be checked. Between pins 1–2, 3–4, 5–8 etc. the resistance should be between 10 – 50 ohms±20%. 5. Verify there are no power factor correction capacitors on the output. Power factor correction capacitors may only be connected on the line side of the control and must be switched out during starting. 6. Verify SCR are not shorted (error display "Motor SCR Loss"). (Resistance check: with all power removed, the resistance can be checked between adjacent Red to Red wires at the control connections. Between pins 1–4 (L3 & T3), 5–8 (L2 & T2) and 9–12 (L1 & T1) the resistance must be greater than 500k ohms. 7. If the "Shearpin" or "Overload" messages are displayed, verify that the soft–start control is correctly sized. 8. If the "Too Hot" message is displayed, verify the thermal switch connection (or jumper is installed) at J4. 9. If the "Sensing Signal" or "SCR Signal" messages are displayed, problem can be excess noise or failure on another circuit board. Contact Baldor. 10. Verify that the motor is less than 328ft.(100m) from the soft–start control.
Bad start then unit trips	1. Check parameter 73 (last trip) error code and isolate source of problem (see Table 5-1). 2. Verify that AC input power and motor power wires are not reversed. (The motor will give an initial kick then start very roughly.) 3. Verify all connections at the SCR gate connections. (Resistance check: with all power removed, the resistance between adjacent Red & Yellow wires at the control card connections can be checked. Between pins 1–2, 3–4, 5–8 etc. the resistance should be between 10 – 50 ohms±20%. 4. Verify there are no power factor correction capacitors on the output. Power factor correction capacitors may only be connected on the line side of the control and must be switched out during starting. 5. Verify SCR are not shorted (error display "Motor SCR Loss"). (Resistance check: with all power removed, the resistance can be checked between adjacent Red to Red wires at the control connections. Between pins 1–4 (L1 & T1), 5–8 (L2 & T2) and 9–12 (L3 & T3) the resistance must be greater than 500k ohms. 6. Verify that the motor is less than 328ft.(100m) from the soft–start control.
SCR's short on first start–up	1. Verify there are no power factor correction capacitors on the output. Power factor correction capacitors may only be connected on the line side of the control and must be switched out during starting. 2. Verify that the soft–start control is correctly sized. Verify the Rated Current, Overload Trip level, and trip delay are correct for the application. 3. Verify that the motor is less than 328ft.(100m) from the soft–start control. Also, verify the motor and motor leads are good.
Unit trips during ramp–up	1. Check parameter 73 (last trip) error code and isolate source of problem (see Table 5-1). 2. Verify that all three phases of AC input power and motor power are present (no missing phases). Check for blown fuse if "Phase Loss" message is displayed. 3. Verify that the soft–start control is correctly sized. Verify the Rated Current, Overload Trip level, and trip delay are correct for the application. 4. If the "Too Hot" message is displayed, verify the thermal switch connection (or jumper is installed) at J4.

Table 5-2 Troubleshooting Guide Continued

INDICATION	CORRECTIVE ACTION
Initial motor kick then bad start	Verify that AC input power and motor power wires are not reversed. (The motor will give an initial kick then start very roughly.)
Current is not displayed	1. Verify the current transformer connections at J3 control terminal. 2. Verify that the soft–start control is correctly sized.
Motor does not accelerate	1. Verify the Current Limit parameter value and increase if necessary. 2. Verify the Ramp Time parameter value and decrease if necessary. 3. Excessive motor current, decrease load. 4. Insufficient break away torque. Change pedestal voltage value to allow greater break away torque.
Fuse(s) blown	1. Excessive start time. 2. Fuse undersized. Use only specified fuses for UL short circuit current ratings (see Section 2).
Cannot change starting from “Remote” to “Keypad”	Remote start input. Factory preset start input is Programmable Input 1 terminals S1 and S0. If a start voltage has been applied to S1 and S0, you cannot change to Keypad until the start command is removed. Therefore, remove the start voltage from S1 and S0 and then change to keypad.

Figure 5-1

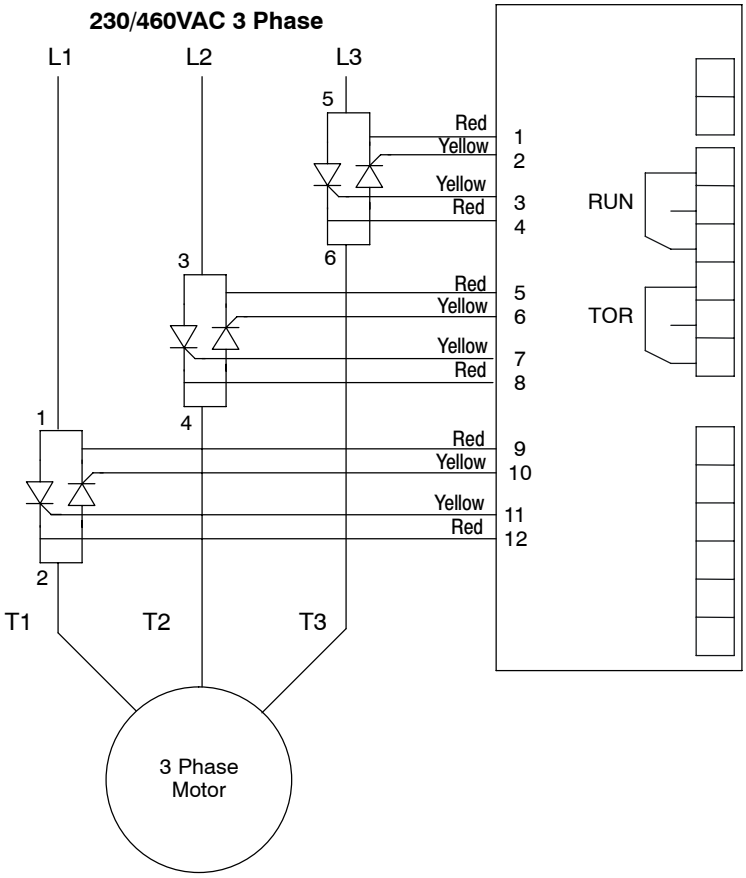

Electrical Noise Considerations

All electronic devices are vulnerable to significant electronic interference signals (commonly called “Electrical Noise”). At the lowest level, noise can cause intermittent operating errors or faults. From a circuit standpoint, 5 or 10 millivolts of noise may cause detrimental operation. For example, analog speed and torque inputs are often scaled at 5 to 10VDC maximum with a typical resolution of one part in 1,000. Thus, noise of only 5 mV represents a substantial error.

At the extreme level, significant noise can cause damage to the drive. Therefore, it is advisable to prevent noise generation and to follow wiring practices that prevent noise generated by other devices from reaching sensitive circuits. In a control, such circuits include inputs for speed, torque, control logic, and speed and position feedback, plus outputs to some indicators and computers.

Relay and Contactor Coils

Among the most common sources of noise are the coils of contactors and relays. When these highly inductive coil circuits are opened, transient conditions often generate spikes of several hundred volts in the control circuit. These spikes can induce several volts of noise in an adjacent wire that runs parallel to a control-circuit wire. Figure 5-1 illustrates noise suppression for AC and DC relay coils.

Figure 5-1 AC and DC Coil Noise Suppression

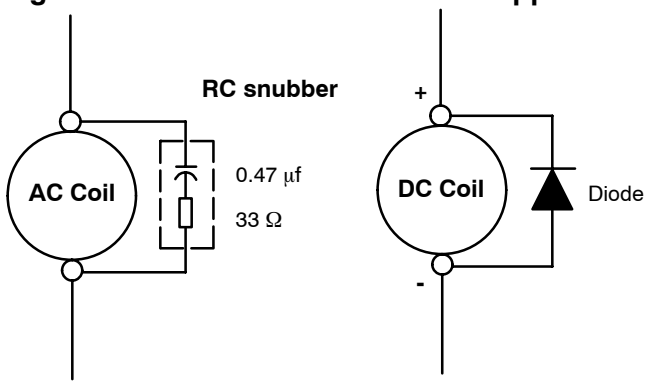

Control Enclosures

Motor controls mounted in a grounded enclosure should also be connected to earth ground with a separate conductor to ensure best ground connection. Often grounding the control to the grounded metallic enclosure is not sufficient. Usually painted surfaces and seals prevent solid metallic contact between the control and the panel enclosure. Likewise, conduit should never be used as a ground conductor for motor power wires or signal conductors.

Special Motor Considerations

Motor frames must also be grounded. As with control enclosures, motors must be grounded directly to the control and plant ground with as short a ground wire as possible. Capacitive coupling within the motor windings produces transient voltages between the motor frame and ground. The severity of these voltages increases with the length of the ground wire. Installations with the motor and control mounted on a common frame, and with heavy ground wires less than 10 ft. long, rarely have a problem caused by these motor−generated transient voltages.

Analog Signals

Analog signals generally originate from speed and torque controls, plus DC tachometers and process controllers. Reliability is often improved by the following noise reduction techniques:

- Use twisted-pair shielded wires with the shield grounded at the drive end only.
- Route analog signal wires away from power or control wires (all other wiring types).
- Cross power and control wires at right angles (90°) to minimize inductive noise coupling.

Identification

Three Phase Digital Soft−Start

MD 7 016 C B

Control Type
MD − Multipurpose Digital

Input Voltage
7- 208, 230, 460VAC
8- 230, 460, 575VAC

Ampere Rating
009- 9 Amp
016- 16 Amp
023- 23 Amp
030- 30 Amp
044- 44 Amp
059- 59 Amp
072- 72 Amp
085- 85 Amp
105- 105 Amp
146- 146 Amp
174- 174 Amp
202- 202 Amp
242- 242 Amp
300- 300 Amp
370- 370 Amp
500- 500 Amp
600- 600 Amp
750- 750 Amp
900- 900 Amp
1100- 1100 Amp
1200- 1200 Amp

Enclosure
A- Open Kit
B- Open Chassis (IP20)
C- NEMA12 (IP65)
P- Panel Mount

Note: Open Chassis meets NEMA Type 1 enclosure requirements but does not comply with UL Type 1 requirement for cable bending space.

Soft−Start Type
A- Combination controller with:
- Input circuit breaker
- Motor overload
- Multipurpose Digital Soft−Start

B- Non−Combination controller with:
- Motor overload
- Multipurpose Digital Soft−Start

C- Controller only
- Multipurpose Digital Soft−Start

Input Ratings

Input Voltage Range	**MD7–XXX** = 208/230/460 VAC +10% to –15% **MD8–XXX** = 230/460/575 VAC +10% to –15%
Phase	Three Phase
Input Frequency	60/50 HZ ± 5%
Overload Rating	Continuous 115% of FLA; 350% for 30 seconds.
Duty Cycle	Continuous
Peak Inverse Voltage	**MD7–XXX** = 1400VAC maximum **MD8–XXX** = 1600VAC maximum
S0, S1	12VDC or 240V (AC or DC)
X1, X2	115VAC (98 – 126VAC) or 230VAC (196 – 253VAC)

Storage Conditions

Ambient Temperature:	–4 to 140°F (-20 to 60 °C)
Humidity:	0 - 95% RH Non-Condensing

Operating Conditions

Enclosure:	NEMA 1 – Wall mounted (Industrial indoor, general purpose) For other enclosures, contact Baldor. The SCR's generate about 3.3 watts of heat per running amp (motor FLA). If the control is mounted in an enclosure, the installer must provide fans or blower with sufficient ventilation. Fan or blower should be rated for at least 0.8 CFM per ampere of motor FLA rating. Baldor provided enclosures are designed to dissipate the heat from the SCR's.
Humidity:	0 - 85% RH Non-Condensing (not to exceed 50% at 40°C ambient). Note: If humidity exceeds 85% RH, use separate enclosure with proper humidity and temperature control or space heater and bypass contactor.
Control Heat Loss	3.3 Watt per running ampere of input current
Ambient Operating Temperature:	32-113°F (0 to +40 °C) enclosed 32-122°F (0 to +40 °C) open panel
Altitude:	Sea level to 3300 Feet (1000 Meters) Derate 1% per 330 Feet (100 Meters) above 3300 Feet
Derating	Derate Amp rating 1% per 330 Feet (100 Meters) above 3300 Feet Derate Amp rating 2% per °C over 40 °C to 60 °C Max
Output Relays – K1 and K2 contacts	Category AC1, 230VAC, 3A.

Standard Duty: Agitator, Compressor, Centrifuge, Fan, Blower, Chiller, Escalator, Pump, Bandsaw, Low Inertia Fan, Small Pump.

Medium Duty: Mill, Conveyor, Drilling Press, Reciprocating Compressor, Elevator, Screw Feeder, Grinder, Hammer Press, Mixer, Large Pump, High Inertia Fan, Pelletizer, Pulper, Flywheel Press, Positive Displacement Pump, Circular Saw, Vibrating Screens.

Heavy Duty: Rock Crusher, Pulverizer, Separator, Chipper, Screw Compressor.

Catalog Number	Output Cont. Current	HP Ratings								
		Standard Duty			Medium Duty			Heavy Duty		
		230V	460V	575V	230V	460V	575V	230V	460V	575V
MD7–009–CB	9A		5			5				
MD7–016–CB	16A	5	10			7.5			5	
MD7–023–CB	23A	7.5	15		5	10			7.5	
MD7–030–CB	30A	10	20		7.5	15			10	
MD7–044–CB	44A	15	30		10	20		5	15	
MD7–059–CB	59A	20	40		15	30		7.5	20	
MD7–072–CB	72A	25	50		15	40		10	30	
MD7–085–CB	85A	30	60		20	50		15	40	
MD7–105–CB	105A	40	75		30	60		20	50	
MD7–146–CB	146A	50	100		40	75		30	60	
MD7–174–CB	174A	60	125		50	100		40	75	
MD7–202–CB	202A	75	150		60	125		50	100	
MD7–242–CB	242A	100	200		75	150		60	125	
MD7–300–CB	300A	125	250		100	200		75	150	
MD7–370–CB	370A	150	300		125	250		100	200	
MD7–500–CB	500A	200	400		150	300		125	250	
MD7–600–CB	600A		500		200	400		150	300	
MD7–750–CB	750A		600			500		200	400	
MD7–900–CB	900A		700			600			500	
MD8–009–CB	9A		5	7.5		5	5			
MD8–016–CB	16A	5	10	10		7.5	7.5		5	5
MD8–023–CB	23A	7.5	15	20	5	10	10		7.5	7.5
MD8–030–CB	30A	10	20	25	7.5	15	20		10	10
MD8–044–CB	44A	15	30	40	10	20	30	5	15	20
MD8–059–CB	59A	20	40	50	15	30	40	7.5	20	30
MD8–072–CB	72A	25	50	60	15	40	50	10	30	40
MD8–085–CB	85A	30	60	75	20	50	60	15	40	50
MD8–105–CB	105A	40	75	100	30	60	75	20	50	60
MD8–146–CB	146A	50	100		40	75	125	30	60	100
MD8–174–CB	174A	60	125	150	50	100		40	75	
MD8–202–CB	202A	75	150	200	60	125	150	50	100	125
MD8–242–CB	242A	100	200	250	75	150	200	60	125	150
MD8–300–CB	300A	125	250		100	200		75	150	
MD8–370–CB	370A	150	300	300	125	250		100	200	
MD8–500–CB	500A	200	400	400	150	300	250	125	250	300
MD8–600–CB	600A		500	500	200	400	400	150	300	400
MD8–750–CB	750A		600	600		500	500	200	400	500
MD8–900–CB	900A		700	700		600	600		500	600
MD8–1100–CB	1100A		800	800		700	700		600	600
MD8–1200–CB	1200A		900	900		800	800		700	700

Mounting Dimensions

Size 1

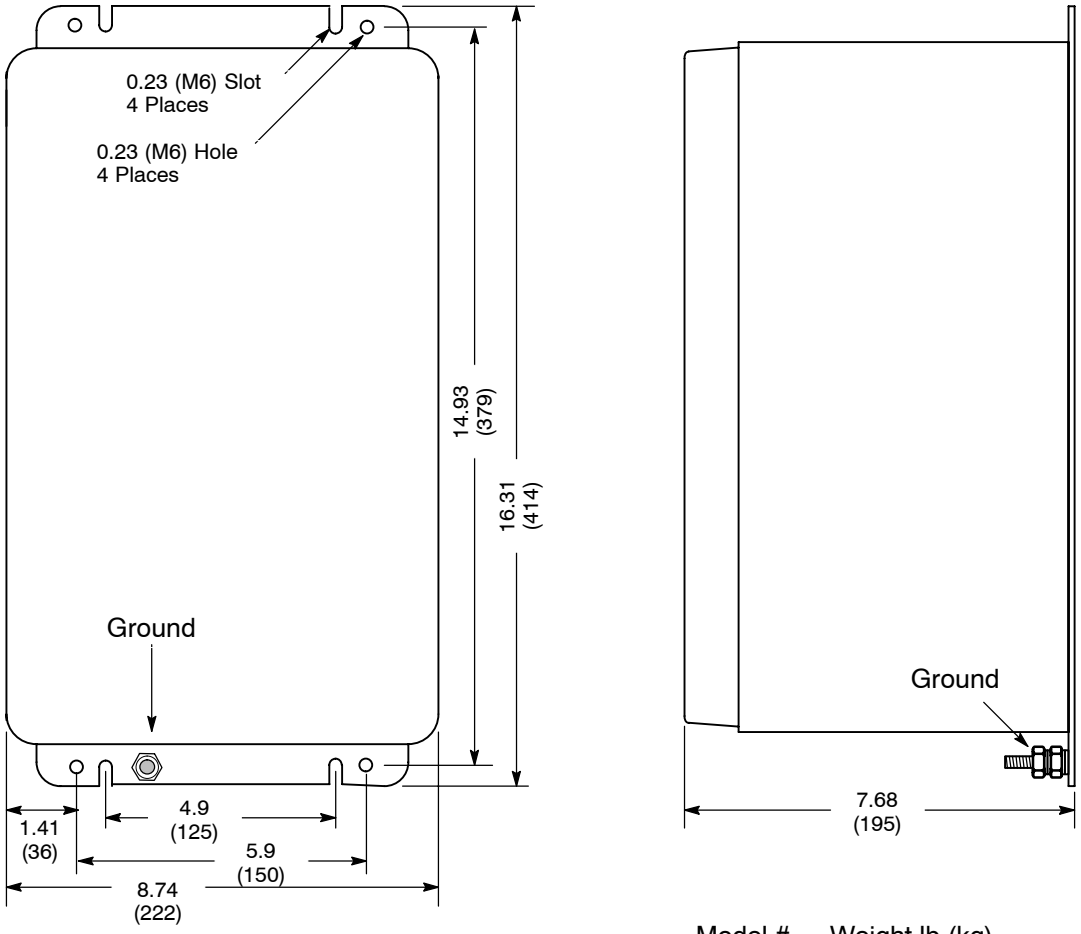

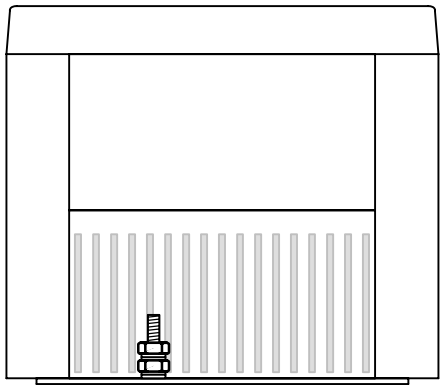

Model #	Weight lb (kg)
–9	16.1(7.3)
–16	16.1(7.3)
–23	16.1(7.3)
–30	16.1(7.3)
–44	16.1(7.3)
–59	18.3(8.3)
–72	18.3(8.3)
–85	18.3(8.3)
–105	18.3(8.3)
–146	18.3(8.3)

Mounting Dimensions Continued

Size 2

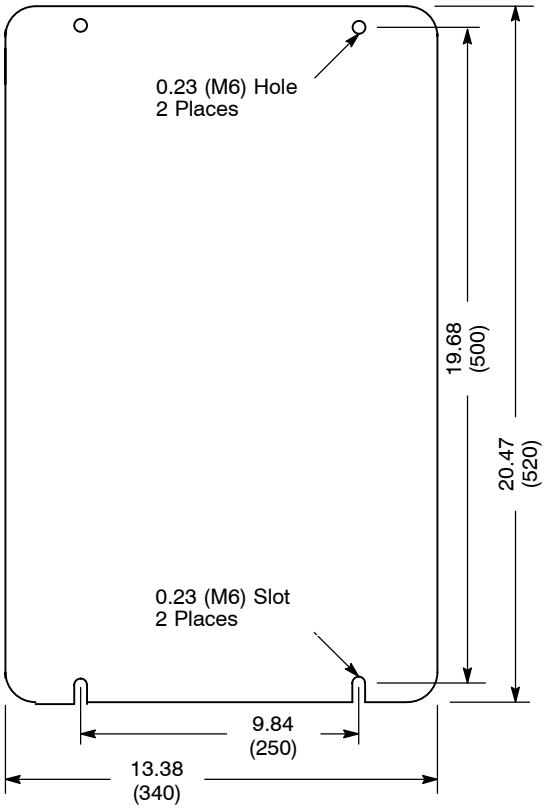

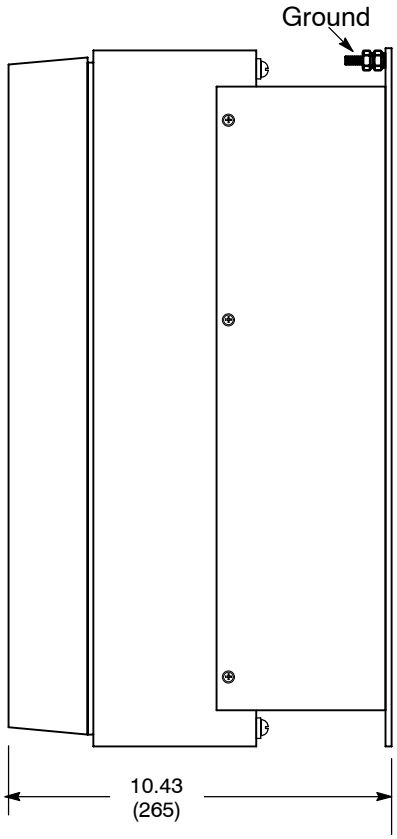

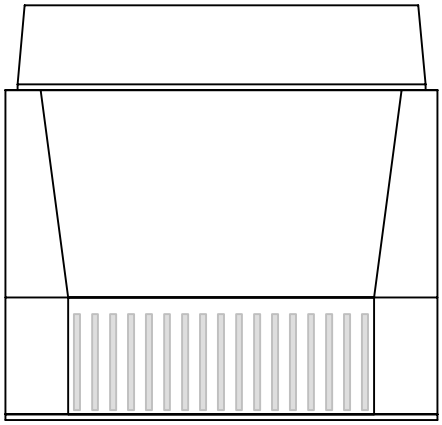

Model #	Weight lb (kg)
–174	34.6(15.7)
–202	34.6(15.7)
–242	48.5(22)
–300	48.5(22)
–370	48.5(22)

Mounting Dimensions Continued

Size 3

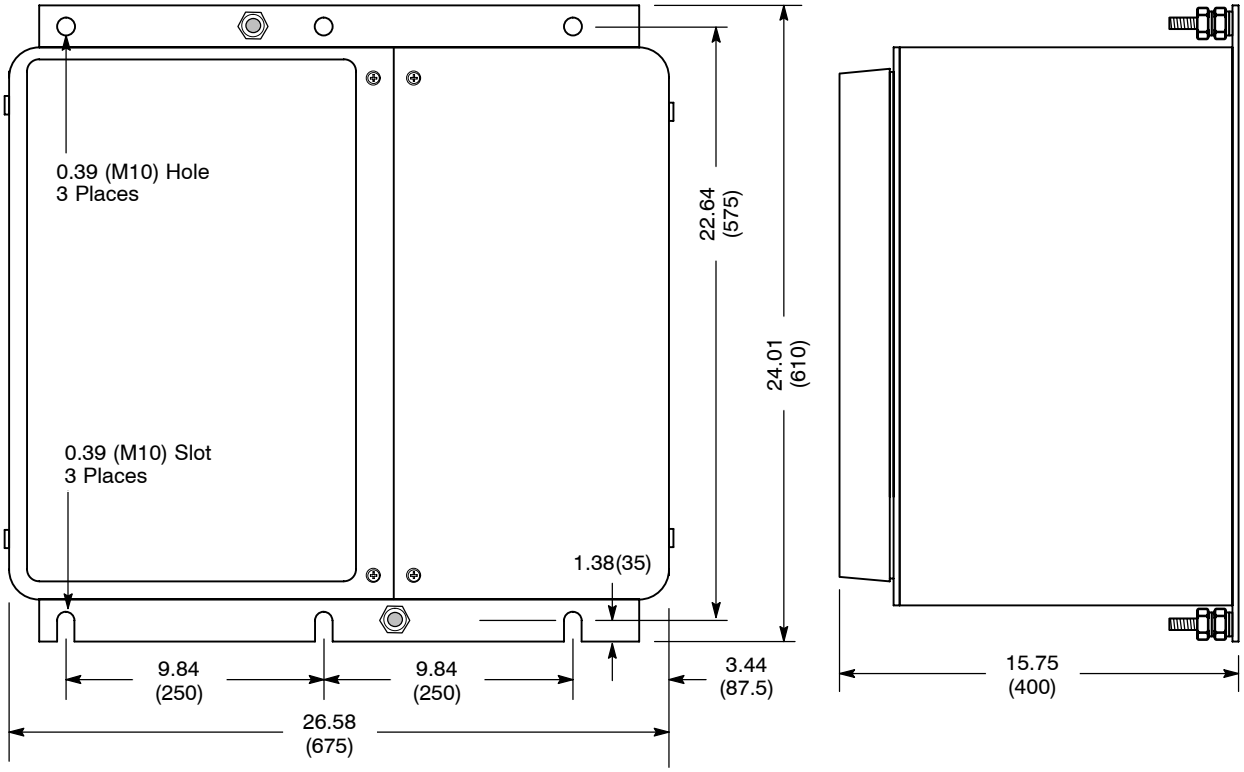

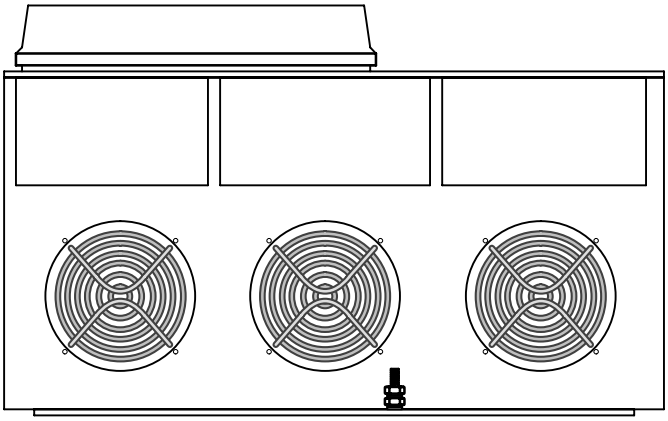

Model #	Weight lb (kg)
–500	143.3(65)
–600	143.3(65)
–750	158.8(72)
–900	158.8(72)

Mounting Dimensions Continued

Size 4

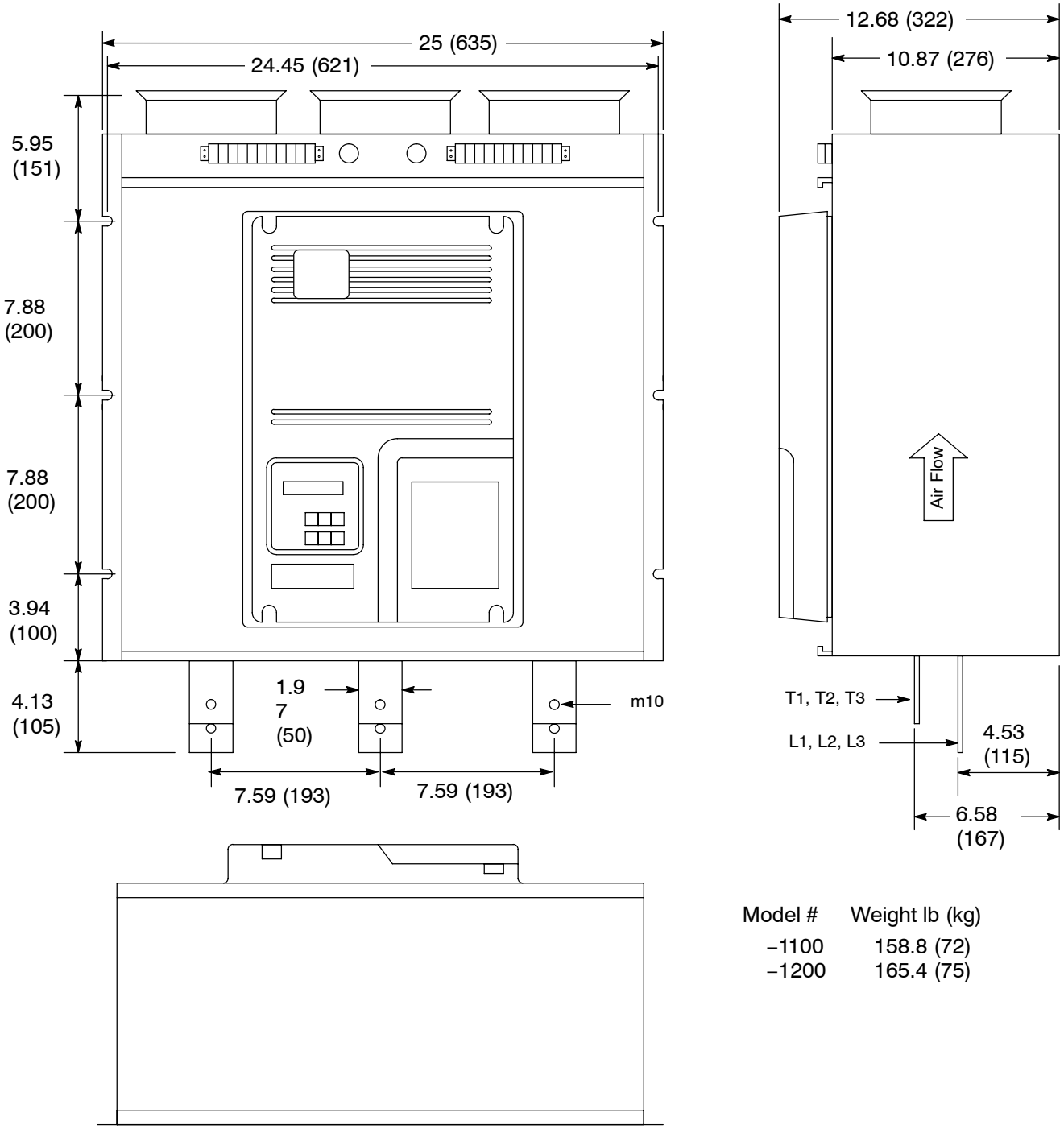

Model #	Weight lb (kg)
–1100	158.8 (72)
–1200	165.4 (75)

Appendix A
CE Guidelines

CE Declaration of Conformity

Baldor indicates that the products are only components and not ready for immediate or instant use within the meaning of “Safety law of appliance”, “EMC Law” or “Machine directive”.

The final mode of operation is defined only after installation into the user’s equipment. It is the responsibility of the user to verify compliance.

The product conforms with the following standards:

EN 60947−4−2	Low−voltage switch gear and control gear − Contactors and motor starters − AC semiconductor motor controllers and starters.

EMC − Conformity and CE − Marking

The information contained herein is for your guidance only and does not guarantee that the installation will meet the requirements of the council directive 89/336/EEC.

The purpose of the EEC directives is to state a minimum technical requirement common to all the member states within the European Union. In turn, these minimum technical requirements are intended to enhance the levels of safety both directly and indirectly.

Council directive 89/336/EEC relating to Electro Magnetic Compliance (EMC) indicates that it is the responsibility of the system integrator to ensure that the entire system complies with all relative directives at the time of installing into service.

Motors and controls are used as components of a system, per the EMC directive. Hence all components, installation of the components, interconnection between components, and shielding and grounding of the system as a whole determines EMC compliance.

The CE mark does not inform the purchaser which directive the product complies with. It rests upon the manufacturer or his authorized representative to ensure the item in question complies fully with all the relative directives in force at the time of installing into service, in the same way as the system integrator previously mentioned. Remember, it is the instructions of installation and use, coupled with the product, that comply with the directive.

Wiring of Shielded (Screened) Cables

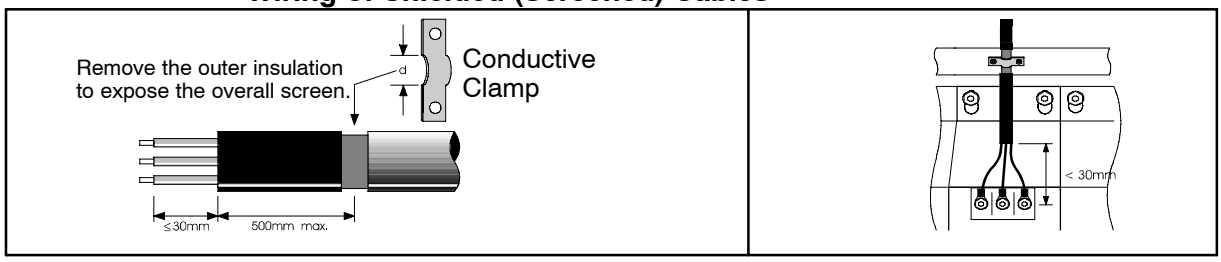

Using CE approved components will not guarantee a CE compliant system!

1. The components used in the drive, installation methods used, materials selected for interconnection of components are important.
2. The installation methods, interconnection materials, shielding, filtering and grounding of the system as a whole will determine CE compliance.
3. The responsibility of CE mark compliance rests entirely with the party who offers the end system for sale (such as an OEM or system integrator).

Baldor products which meet the EMC directive requirements are indicated with a “CE” mark. A duly signed CE declaration of conformity is available from Baldor.

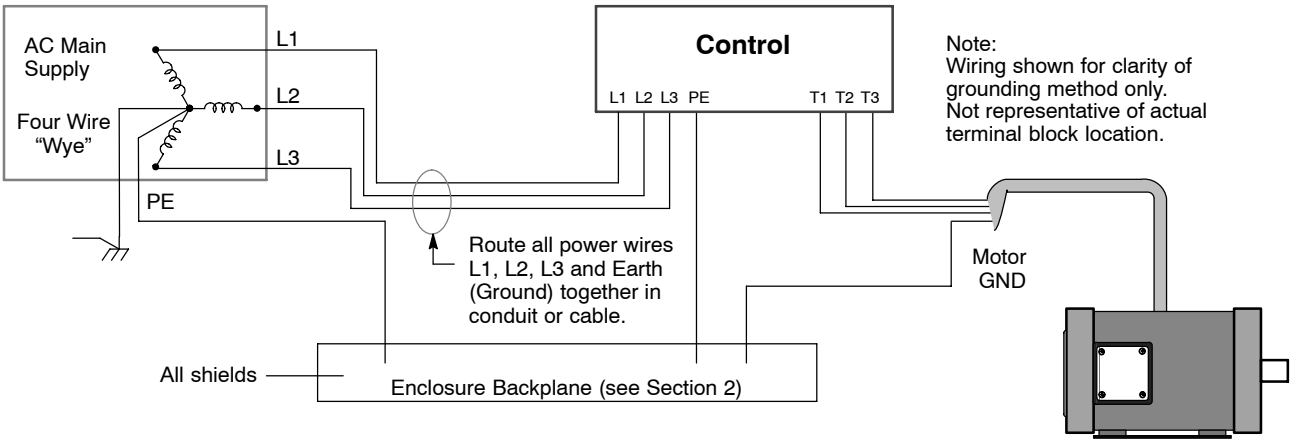

Note: Use shielded cable for control signal wires. Route control signal wires in conduit. These wires must be kept separate from power and motor wires.

EMC Installation Instructions

To ensure electromagnetic compatibility (EMC), the following installation instructions should be completed. These steps help to reduce interference.
Consider the following:

- Grounding of all system elements to a central ground point
- Shielding of all cables and signal wires
- Filtering of power lines

A proper enclosure should have the following characteristics:

A) All metal conducting parts of the enclosure must be electrically connected to the back plane. These connections should be made with a grounding strap from each element to a central grounding point . [1]

B) Keep the power wiring (motor and power cable) and control wiring separated. If these wires must cross, be sure they cross at 90 degrees to minimize noise due to induction.

C) The shield connections of the signal and power cables should be connected to the screen rails or clamps. The screen rails or clamps should be conductive clamps fastened to the cabinet. [2]

D) The cable to the regeneration resistor must be shielded. The shield must be connected to ground at both ends.

E) The location of the AC mains filter has to be situated close to the drive so the AC power wires are as short as possible.

F) Wires inside the enclosure should be placed as close as possible to conducting metal, cabinet walls and plates. It is advised to terminate unused wires to chassis ground. [1]

G) To reduce ground current, use at least a 10mm^2 (6 AWG) solid wire for ground connections.

[1] Grounding in general describes all metal parts which can be connected to a protective conductor, e.g. housing of cabinet, motor housing, etc. to a central ground point. This central ground point is then connected to the main plant (or building) ground.

[2] Or run as twisted pair at minimum.

Cable Screens Grounding

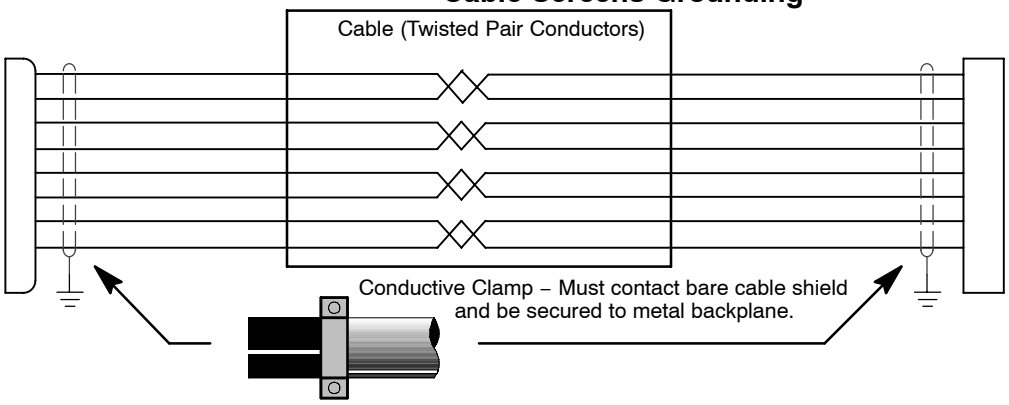

Appendix B
Parameter Values

Version 5MC (4/2/01) ☐ Read Only Parameter Values

Title	P#	Parameter	Adjustable Range	Factory	User Setting
Parameter	P0	Dummy Parameter	0–255	0	
	P1	Station Number	1–99	1	
	P2	Country	1–255	44 (England)	
	P3	Software Type	Factory Set	Read Only	
	P4	Software Version	Factory Set	Read Only	
Password	P5	Password Value	0–255	0	
Advanced	P6	Firing Mode	0–5	0 (MTR outside delta)	
Basic	P7	Protection Mode	0–192	192 (Full + Optimize)	
Parameters	P8	Status 1	0–255	1 (bit 00000001)	
	P9	Status 2	0–99	0 (bit 00000000)	
	P10	Status 3	0–255	0 (bit 0000000)	
Basic	P11	Start Pedestal	10–60%	20 (% of line volts)	
	P12	Start Time	1–255 seconds	5 (seconds)	
Advanced	P13	Kick Pedestal	60–90%	75 (% of Line)	
	P14	Kick Time	10–40 cycles	25 Cycles	
	P15	Dwell Time	1–255 seconds	5 seconds	
Basic	P16	Stop Pedestal	10–60%	10 (% of Line)	
	P17	Stop Time	0–255 seconds	0 seconds	
Auto Features	P18	Auto Config.	0–255	6 (bit 00000110)	
Advanced	P19	Optimise Rate	4–30	5 (for unstable load)	
Parameters	P20	Reference PF (Power Factor)	0–147 degrees	146.7626 degrees	
	P21	Present PF (Power Factor)	0–147 degrees	146.7626 degrees	
	P22	Delay Angle (SCR OFF time)	0–147 degrees	146.7626 degrees	
	P23	Maximum Optimizing Delay	17–147 degrees	57.55396 degrees	
	P24	Rated Current (High Byte –Hundreds)	Factory Set	Factory Set	
	P25	Rated Current (Low Byte – Units)	Factory Set	Factory Set	
	P26	Running Current Amps	Factory Set	Factory Set	
	P27	Peak Start Current (measured at last start)	Factory Set	Factory Set	
Advanced Current	P28	Low Current Level (undercurrent trip)	100–800% of running Amps (P24 & P25)	9.375% of running Amps	
	P29	Low Current Time (delay before trip)	5–255 seconds	50 seconds	
	P30	Current Limit Level (scaling = 0.03125)	1–7.96875 (x FLC) Amps	350% of running Amps	
	P31	Current Limit Time (delay before trip)	5–255 seconds	30 seconds	
	P32	Shearpin Level (undercurrent trip)	1–5 (x FLC) Amps	3.125 x FLC Amps	
	P33	Shearpin Time (delay before trip)	5–255 cycles	100 cycles	
	P34	Overload Level (SCR protection)	0.59–2 (x FLC) Amps	1.09375 x FLC Amps	
	P35	Overload Delay (delay before trip)	10–140	140	

Note: (x Ie) or (x FLC) means “Times the rated current of the control (P24 and P25 values).”

Read Only Parameter Values

Title	P#	Parameter	Adjustable Range	Factory	User Setting
Parameters	P36	% Overload (status only)	0–100% (100%=Tripped)	0%	
	P37	Chassis Temperature	0–255	0	
	P38	Pot1	0–255	0	
	P39	Pot2	0–255	0	
	P40	Pot3	0–1	0	
	P41	DC Input	0–12	0VDC	
	P42	Thermistor	0–255	0	
	P43	4–20mA Input	0–20.4	0mA	
	P44	TEMP Trip Level	20–255	30	
	P45	4–20mA Map	0–125	0 (parameter #)	
	P46	4–20mA Set Level	0.08–20.32	10.24mA	
	P47	DC Input Map	0–125	0 (parameter #)	
	P48	Set Level DC Input	0.03922–9.960784	5.019608 VDC	
	P49	Map DAC Output 1	0–125	26 (parameter #)	
	P50	Map DAC Output 2	0–125	22 (parameter #)	
	P51	User Flags 1	0–255	142 (Bit 10001110)	
	P52	User Flags 2	0–255	0 (Bit 00000000)	
	P53	User Flags 3	0–255	19 (Bit 00010011)	
	P54	I/O Polarity	0–255	127 (Bit 01111111)	
	P55	MAP LED	0–255	9 (x FLC)	
	P56	LED MASK	0–255	1 (x FLC)	
	P57	Map K1 To (Parameter)	0–125	52 (Parameter #)	
	P58	K1 Bit Mask (P57 bit selected for K1)	0–255	32 (bit 00100000)	
	P59	Map K2 To (Parameter)	0–125	8 (Parameter #)	
	P60	K2 Bit Mask (P59 bit selected for K2)	0–128	8 (bit 00001000)	
	P61	Map K3 To (Parameter)	0–125	9 (Parameter #)	
	P62	K3 Bit Mask (P61 bit selected for K3)	0.1–3	1 (bit 00000001)	
	P63	Map K4 To (Parameter)	0–125	9 (Parameter #)	
	P64	K4 Bit Mask (P63 bit selected for K4)	0–3	2 (bit 00000010)	
	P65	Map Input1 To (Parameter)	0–125	52 (Parameter #)	
	P66	Input1 Bit Mask (P65 bit selected for I/P1)	0–128	16 (bit 00010000)	
	P67	Map Input2 To (Parameter)	0–125	0 (Parameter #)	
	P68	Input2 Bit Mask (P67 bit selected for I/P2)	0–128	0 (bit 00000000)	
	P69	Map Input3 To (Parameter)	0–125	0 (Parameter #)	
	P70	Input3 Bit Mask (P69 bit selected for I/P3)	0–128	0 (bit 00000000)	
Advanced Current	P71	Contactor Delay (after start command)	20–800milli seconds	160 milli seconds	
	P72	Trip Sensitivity	1–15 (Sensitivity Level)	1 (Most Sensitive)	
	P73	Last Trip (Most Recent Trip)	1–16 (Status Code)	0	

Read Only Parameter Values

Title	P#	Parameter	Adjustable Range	Factory	User Setting
Parameters	P74	2nd Last Trip	1–16 (Status Code)	0	
	P75	3rd Last Trip	1–16 (Status Code)	0	
	P76	4th Last Trip	1–16 (Status Code)	0	
	P77	5th Last Trip (Oldest trip)	1–16 (Status Code)	0	
	P78	Protection Mode 2	0–192	192 (Full + Optimize)	
	P79	Start Pedestal 2	10–60%	50 (% of line volts)	
	P80	Start Time 2	1–255 seconds	5 seconds	
	P81	Kick Pedestal 2	60–90%	75 (% of line volts)	
	P82	Kick Time 2	10–40 seconds	25 seconds	
	P83	Dwell 2	1–255 seconds	5 seconds	
	P84	Stop Pedestal 2	10–60 seconds	10 seconds	
	P85	Stop Time 2	0–255 seconds	0 seconds	
	P86	Auto Config 2	0–255	6 (Bit 00000110)	
	P87	Under Current 2	0–1 (x FLC) Amps	0.125 x FLC Amps	
	P88	Under Current Time 2	5–255 seconds	50 seconds	
	P89	Current Limit 2	0–8 (x FLC) Amps	4 x FLC Amps	
	P90	Current Limit Time 2	5–255 seconds	15 seconds	
	P91	Shearpin 2	1–5 (x FLC) Amps	3 x FLC Amps	
	P92	Shearpin Time 2	5–255 cycles	50 cycles	
	P93	Overload Level 2	0.5–2 (x FLC) Amps	1.09375 x FLC Amps	
	P94	Overload Delay 2	10–140 seconds	140 seconds	
	P95	User Flags 1 (for 2nd param set)	0–255	134 (Bit 10000110)	
	P96	User Flags 2 (for 2nd param set)	0–255	64 (Bit 01000000)	
	P97	Flag 1 Input Source Address	0–125	0 (Parameter #)	
	P98	Flag 1 Input Source Mask	0–128	0 (bit 00000000)	
	P99	Flag 1 Output Destination Address	0–125	0 (Parameter #)	
	P100	Flag 1 Output Destination Mask	0–255	0 (bit 00000000)	
	P101	Flag 2 Input Source Address	0–125	0 (Parameter #)	
	P102	Flag 2 Input Source Mask	0–20	0 (bit 00000000)	
	P103	Flag 2 Output Destination Address	0–125	0 (Parameter #)	
	P104	Flag 2 Output Destination Mask	0–11	0 (bit 00000000)	
	P105	Loop Input	0–125	41 (Parameter #)	
	P106	Loop Feedback	0–125	26 (Parameter #)	
	P107	Error Gain	1–255	37	
	P108	Error Divisor	1–255	7	
	P109	Max Slope	0–50	10	
	P110	Guard Gap	0–150	10	

Read Only Parameter Values

Title	P#	Parameter	Adjustable Range	Factory	User Setting
Parameters	P111	User Parameter	0–255	0	
	P112	Status 4	0–255	0 (bit 00000000)	
	P113	Drive Type	0–255	0	
	P114	Soft Switch Off	0–5	0	
	P115	Selected Application	1–11	0	
	P116	5MC Inhibit Time (restart not allowed)	0–63.75 minutes	0 minutes	
	P117	Command Source	Unused		
	P118	Motor Rated Current	(0.5 – 1) x FLC	100% of full load current (FLC)	
	P119	Preset Parameter Number to Display	0.1–125	26 (parameter #)	
	P120	Status 5	0–255	0 (bit 00000000)	
	P121	User Flags 4	1–255	0 (bit 00000000)	
	P122	Soft–Start Smoothing	1–15	5 (for unstable load)	
	P123	Temperature/Altitude Derate	0–50	0%	
	P124	Off Line Command	0–255	0	
	P125	Bus Baud Rate	0–255	0 (9600)	
	P126	Bus Action Fail	0 or 1	0 (No Trip)	
	P127	Hidden Trip Flags	0–255	0	

Appendix C
Replacement Parts

Voltage Independent Parts

PART No.	Description
SSDTR900	Control power transformer, 9-44 A & 500-900 A
SSDTR370	Control power transformer, 59-370 A
SSDCBL146	Keypad Cable, 16-146 A
SSDCBL900	Keypad Cable, 500-900 A
SSDCBL370	Keypad Cable, 174-370 A
SSDEBKPD	Keypad for all amp sizes
SSDCT044	Current transformer, 9- 44 A AND 500-900A
SSDCT202	Current transformer, 59-202 A
SSDCT370	Current transformer, 242-370 A
SSDCT900	Current transformer, 500-900 A
SSDCVR146	Cover, 9-146 A
SSDCVR900	Cover, 174-900 A
EF0034A01	Cooling Fan, 30-146A
EF0008	Cooling Fan, 500-900A
EF0034A02	Cooling Fan, 174-370A
SSDTBK120	Switch, Control Voltage Selector (X1/X2)
SSDTP	Switch, Termal Protection, all sizes, heat sink mounted

460VAC Parts

PART No.	Description
SSD1PSCR030	1 Phase SCR pair for 9, 16, 23, 30 A
SSD1PSCR059	1 Phase SCR pair for 44, 59 A
SSD1PSCR146	1 Phase SCR pair for 72, 85, 105, 146 A
SSD1PSCR202	1 Phase SCR pair for 174, 202 A
SSD3PC242	1 Phase power cell for 242, 300A
SSD1SCR300	Single SCR 242, 300A, 460V
SSD3SCR370	1 Phase power cell for 370 A
SSD1SCR370	Single SCR 370A
SSDPC600	1 Phase power cell for 500, 600 A
SSD1SCR600	Single SCR 500, 600A
SSDPC900	1 Phase power cell for 750, 900 A
SSD1SCR900	Single SCR 900A
SSDEB009	Standard control board for 9 A
SSDEB016	Standard control board for 16 A
SSDEB023	Standard control board for 23 A
SSDEB030	Standard control board for 30 A
SSDEB044	Standard control board for 44 A
SSDEB059	Standard control board for 59 A
SSDEB072	Standard control board for 72 A
SSDEB085	Standard control board for 85 A
SSDEB105	Standard control board for 105 A
SSDEB146	Standard control board for 146 A
SSDEB174	Standard control board for 174 A
SSDEB202	Standard control board for 202 A
SSDEB242	Standard control board for 242 A
SSDEB300	Standard control board for 300 A
SSDEB370	Standard control board for 370 A
SSDEB500	Standard control board for 500 A
SSDEB600	Standard control board for 600 A
SSDEB750	Standard control board for 750 A
SSDEB900	Standard control board for 900 A
SSDCBLGT900	Gate/Cathode wire assembly, 500-900 A
SSDCBLGT059	Gate/Cathode wires, 16-59 A
SSDCBLGT146	Gate/Cathode wires, 72-146 A
SSDCBLGT370	Gate/Cathode wires, 174-370 A

575VAC Parts

PART No.	Description
SSD1PSCR8030	1 Phase SCR pair for 9, 16, 23, 30 A
SSD1PSCR8059	1 Phase SCR pair for 44, 59 A
SSD1PSCR8146	1 Phase SCR pair for 72, 85, 105, 146 A
SSD1SCR8202	1 Phase SCR pair for 174, 202 A
SSD3PC8242	1 Phase power cell for 242, 300A
SSD1SCR8300	Single SCR 242, 300A
SSD3SCR8370	1 Phase power cell for 370 A
SSD1SCR8370	Single SCR 370A
SSDPC8600	1 Phase power cell for 500, 600 A
SSD1SCR8600	Single SCR 500, 600A
SSDPC8900	1 Phase power cell for 750, 900 A
SSD1SCR8900	Single SCR 900A
SSDEB8009	Standard control board for 9 A
SSDEB8016	Standard control board for 16 A
SSDEB8023	Standard control board for 23 A
SSDEB8030	Standard control board for 30 A
SSDEB8044	Standard control board for 44 A
SSDEB8059	Standard control board for 59 A
SSDEB8072	Standard control board for 72 A
SSDEB8085	Standard control board for 85 A
SSDEB8105	Standard control board for 105 A
SSDEB8146	Standard control board for 146 A
SSDEB8174	Standard control board for 174 A
SSDEB8202	Standard control board for 202 A
SSDEB8242	Standard control board for 242 A
SSDEB8300	Standard control board for 300 A
SSDEB8370	Standard control board for 370 A
SSDEB8500	Standard control board for 500 A
SSDEB8600	Standard control board for 600 A
SSDEB8750	Standard control board for 750 A
SSDEB8900	Standard control board for 900 A
SSDCBLGT8059	Gate/Cathode wires, 16–59 A
SSDCBLGT8146	Gate/Cathode wires, 72–146 A
SSDCBLGT8370	Gate/Cathode wires, 174–370 A
SSDCBLGT8900	Gate/Cathode wire assembly, 500–900 A

Appendix D
Voltage Surge Protection

Grounding

Proper grounding is extremely important. The symptoms produced by improper grounding are obvious. Sometimes filters and other expensive devices are added to reduce the effects of problems caused by poor grounding. There can be several reference points in a circuit but there should always only be one ground point. Neutral and ground are not the same. Neutral is a current carrying conductor. All of the neutrals in a system should connect at a central point and that point should be connected to the system ground.

The goal is to have no current through the ground conductor. Circulating ground current is a source of electrical noise normally associated with unbalanced voltages or unbalanced loads. Capacitive or inductive coupling between power lines and the neutral or ground conductors is another noise source. Currents that flow through capacitive paths or from a magnetic field tend to change rapidly and produce high frequency interference called RFI (radio frequency interference).

Good grounding is also important to minimize the effects of large voltage spikes that can create significant current flow in the ground conductors. The source of these voltages can be lightning striking the power lines, switching of large power loads and others. A balanced three phase four wire system with a system ground as shown in Figure D-1 can minimize noise problems normally associated with grounding. AC power and motor leads should be as short as possible and enclosed in conduit or shielded cable should be used. Power wires and Motor leads should never be in the same conduit.

Figure D-1

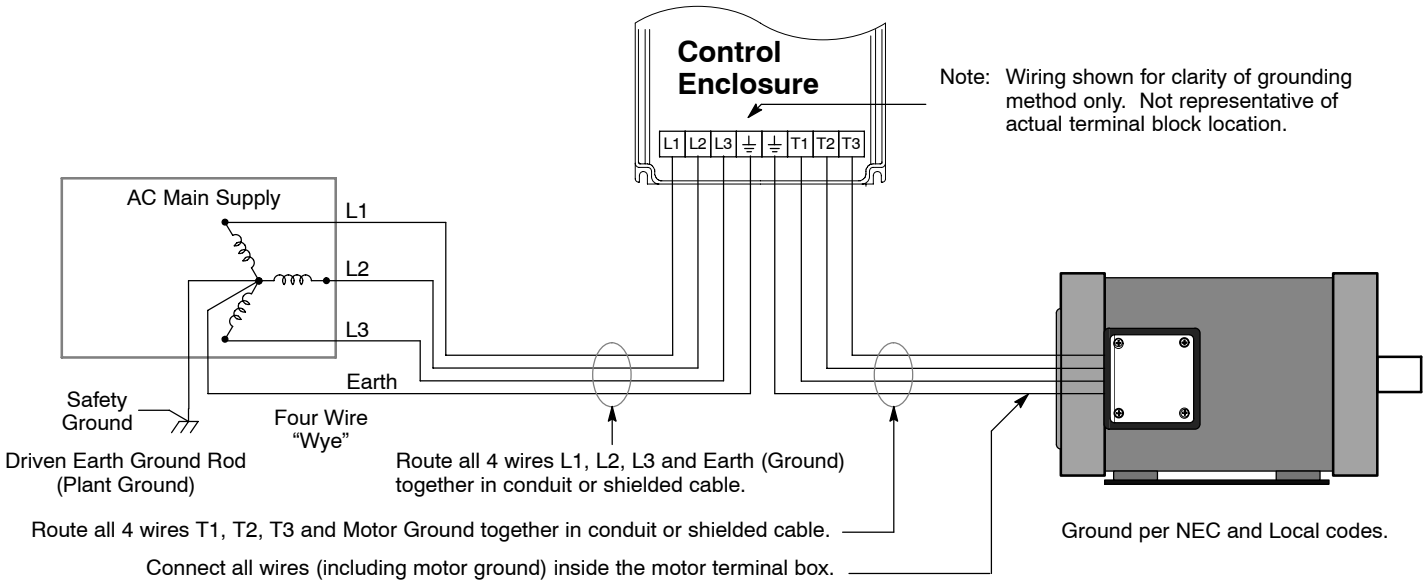

MOV

(Metal Oxide Varistor)

Baldor recommends that MOV devices be installed at the input power connections to the Soft−Start control to provide "phase−to phase" and "phase−to−ground" voltage spike protection. Three MOV devices can be connected in "WYE" configuration with an additional MOV device connected to ground. Figures D-2 and D-3 shows how to connect the MOV's into the various power distribution system designs. Voltage spikes on any phase will be conducted to ground by the lowest impedance path (phase−to−phase or phase−to−ground).

Figure D-2 WYE Configurations

Ungrounded

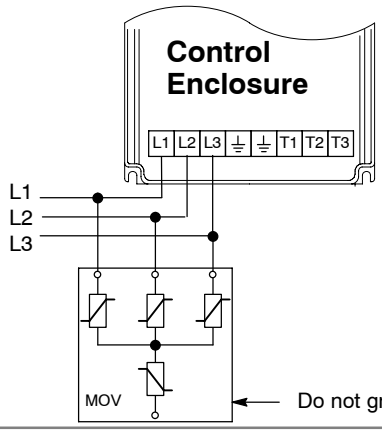

Do not ground MOV. Cut off green wire and insulate (cap off) with wire nut.

Symbol

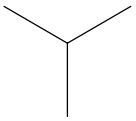

Grounded or High Resistance Ground

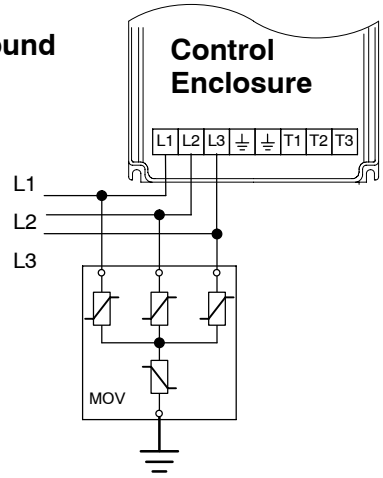

Symbol

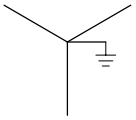

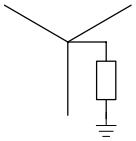

Figure D-3 Delta Configurations

Ungrounded

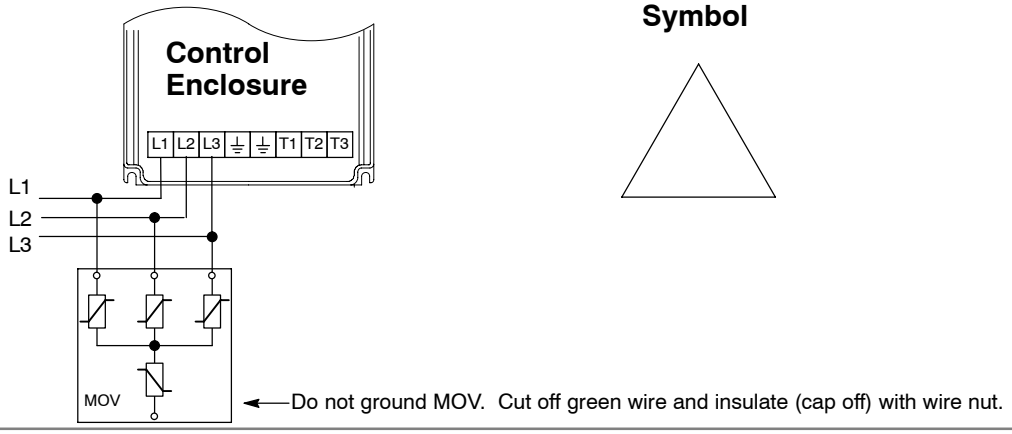

Corner or Center–Tap Grounded

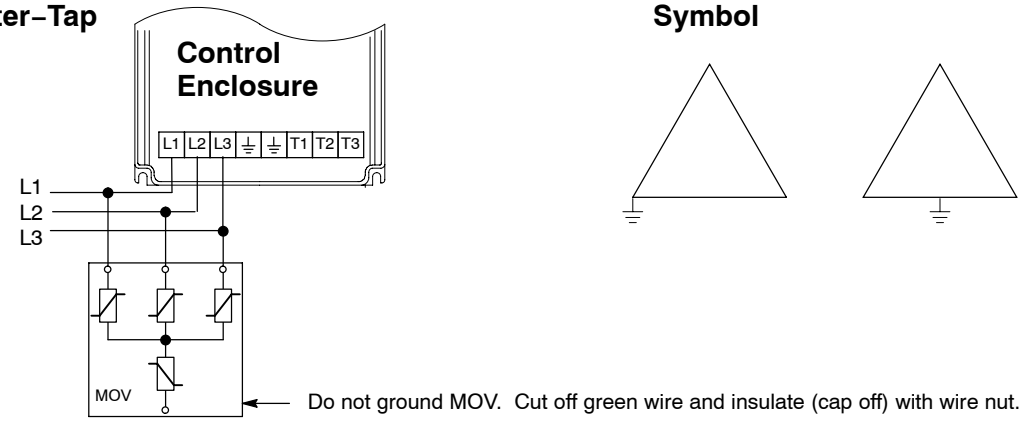

Table D-1 Baldor MOV Specifications

Catalog #		MOV505L	MOV620EL
Line Voltage	Volts	480	575
Energy	Joules	260	300
Peak Current	Amps	6500	6500
Clamping Voltage	Volts	1300	1580

Remote Keypad Mounting Template

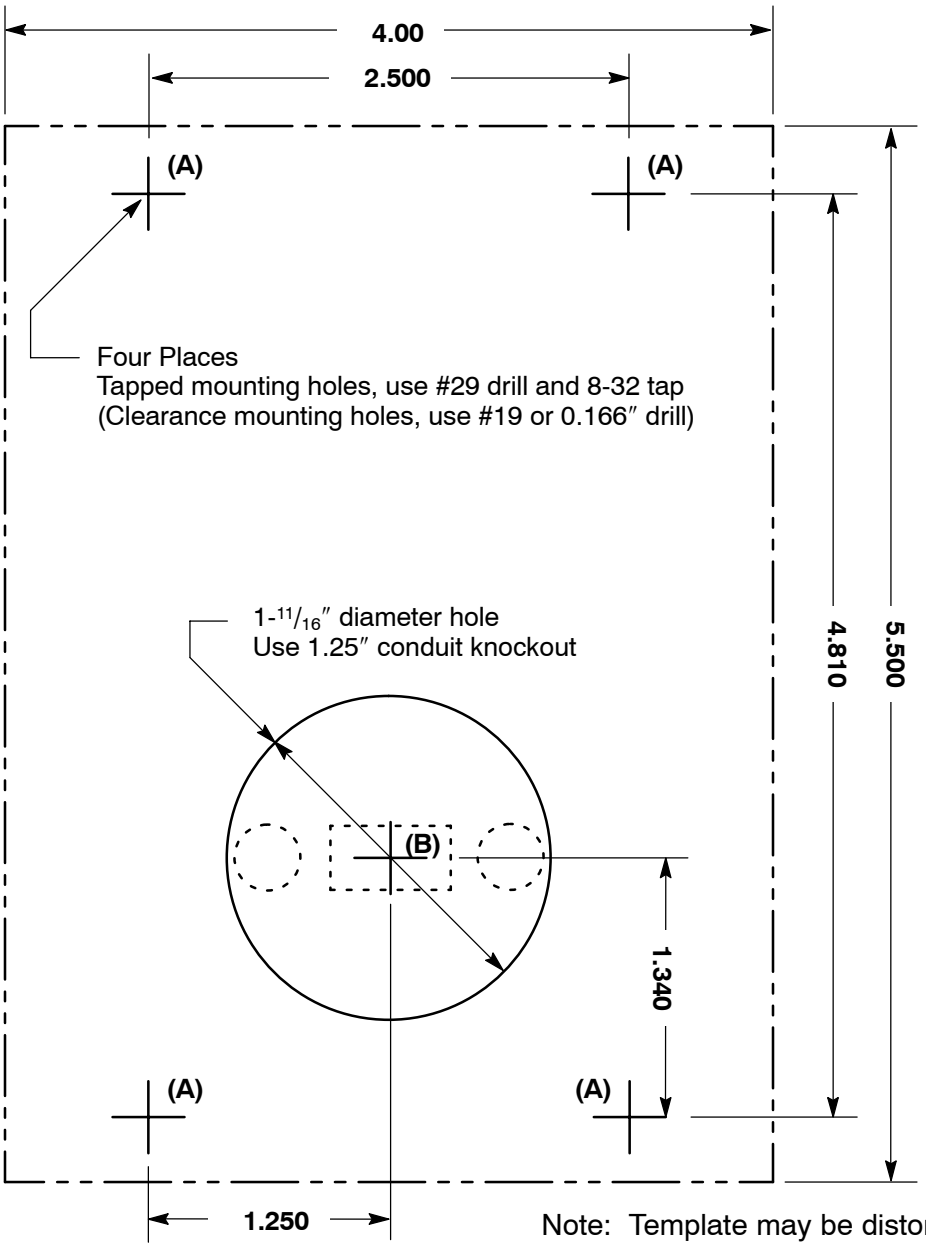

Note: Template may be distorted due to reproduction.

Baldor District Offices Baldor District Offices

UNITED STATES

ARIZONA
PHOENIX
4211 S 43RD PLACE
PHOENIX, AZ 85040
PHONE: 602 470 0407
FAX: 602 470 0464

ARKANSAS
CLARKSVILLE
1001 COLLEGE AVE.
CLARKSVILLE, AR 72830
PHONE: 479 754 9108
FAX: 479 754 9205

CALIFORNIA
LOS ANGELES
6480 FLOTILLA
COMMERCE, CA 90040
PHONE: 323 724 6771
FAX: 323 721 5859

HAYWARD
21056 FORBES STREET
HAYWARD, CA 94545
PHONE: 510 785 9900
FAX: 510 785 9910

COLORADO
DENVER
2520 W BARBERRY PLACE
DENVER, CO 80204
PHONE: 303 623 0127
FAX: 303 595 3772

CONNECTICUT
WALLINGFORD
65 SOUTH TURNPIKE ROAD
WALLINGFORD, CT 06492
PHONE: 203 269 1354
FAX: 203 269 5485

FLORIDA
TAMPA/PUERTO RICO/
VIRGIN ISLANDS
3906 EAST 11TH AVENUE
TAMPA, FL 33605
PHONE: 813 248 5078
FAX: 813 247 2984

GEORGIA
ATLANTA
62 TECHNOLOGY DR.
ALPHARETTA, GA 30005
PHONE: 770 772 7000
FAX: 770 772 7200

ILLINOIS
CHICAGO
1601 FRONTENAC ROAD
NAPERVILLE, IL 60563
PHONE: 630 848 5100
FAX: 630 848 51 10

INDIANA
INDIANAPOLIS
5525 W. MINNESOTA STREET
INDIANAPOLIS, IN 46241
PHONE: 317 246 5100
FAX: 317 246 51 10

IOWA
DES MOINES
1800 DIXON STREET, SUITE C
DES MOINES, IA 50316
PHONE: 515 263 6929
FAX: 515 263 6515

MARYLAND
BALTIMORE
6660 SANTA BARBARA RD.
SUITE 22 24
ELKRIDGE, MD 21075
PHONE: 410 579 2135
FAX: 410 579 2677

MASSACHUSETTS
BOSTON
6 PULLMAN STREET
WORCESTER, MA 01606
PHONE: 508 854 0708
FAX: 508 854 0291

MICHIGAN
DETROIT
33782 STERLING PONDS BLVD.
STERLING HEIGHTS, MI 48312
PHONE: 586 978 9800
FAX: 586 978 9969

GRAND RAPIDS
668 THREE MILE ROAD NW
GRAND RAPIDS, MI 49504
PHONE: 616 785 1784
FAX: 616 785 1788

MINNESOTA
MINNEAPOLIS
21080 134TH AVE. NORTH
ROGERS, MN 55374
PHONE: 763 428 3633
FAX: 763 428 4551

MISSOURI
ST LOUIS
422 INDUSTRIAL DRIVE
MARYLAND HEIGHTS, MO 63043
PHONE: 314 298 1800
FAX: 314 298 7660

KANSAS CITY
1501 BEDFORD AVENUE
NORTH KANSAS CITY, MO 64116
PHONE: 816 587 0272
FAX: 816 587 3735

NEW YORK
AUBURN
ONE ELLIS DRIVE
AUBURN, NY 13021
PHONE: 315 255 3403
FAX: 315 253 9923

NORTH CAROLINA
GREENSBORO
1220 ROTHERWOOD ROAD
GREENSBORO, NC 27406
P O BOX 16500
GREENSBORO, NC 27416
PHONE: 336 272 6104
FAX: 336 273 6628

OHIO
CINCINNATI
2929 CRESCENTVILLE ROAD
WEST CHESTER, OH 45069
PHONE: 513 771 2600
FAX: 513 772 2219

CLEVELAND
8929 FREEWAY DRIVE
MACEDONIA, OH 44056
PHONE: 330 468 4777
FAX: 330 468 4778

OKLAHOMA
TULSA
2 EAST DAWES
BIXBY, OK 74008
PHONE: 918 366 9320
FAX: 918 366 9338

OREGON
PORTLAND
20393 SW AVERY COURT
TUALATIN, OR 97062
PHONE: 503 691 9010
FAX: 503 691 9012

PENNSYLVANIA
PHILADELPHIA
1035 THOMAS BUSCH
MEMORIAL HIGHWAY
PENNSAUKEN, NJ 08110
PHONE: 856 661 1442
FAX: 856 663 6363

PITTSBURGH
159 PROMINENCE DRIVE
NEW KENSINGTON, PA 15068
PHONE: 724 889 0092
FAX: 724 889 0094

TENNESSEE
MEMPHIS
4000 WINCHESTER ROAD
MEMPHIS, TN 38118
PHONE: 901 365 2020
FAX: 901 365 3914

TEXAS
HOUSTON
4647 PINE TIMBERS
SUITE # 135
HOUSTON, TX 77041
PHONE: 713 895 7062
FAX: 713 690 4540

DALLAS
3040 QUEBEC
DALLAS, TX 75247
PHONE: 214 634 7271
FAX: 214 634 8874

UTAH
SALT LAKE CITY
2230 SOUTH MAIN STREET
SALT LAKE CITY, UT 84115
PHONE: 801 832 0127
FAX: 801 832 891 1

WISCONSIN
MILWAUKEE
2725 SOUTH 163RD STREET
NEW BERLIN, WI 53151
PHONE: 262 784 5940
FAX: 262 784 1215

INTERNATIONAL SALES
FORT SMITH, AR
P.O. BOX 2400
FORT SMITH, AR 72902
PHONE: 479 646 471 1
FAX: 479 648 5895

CANADA
EDMONTON, ALBERTA
4053 92 STREET
EDMONTON, ALBERTA T6E 6R8
PHONE: 780 434 4900
FAX: 780 438 2600

OAKVILLE, ONTARIO
2750 COVENTRY ROAD
OAKVILLE, ONTARIO L6H 6R1
PHONE: 905 829 3301
FAX: 905 829 3302

MONTREAL, QUEBEC
1844 WILLIAM STREET
MONTREAL, QUEBEC H3J 1R5
PHONE: 514 933 271 1
FAX: 514 933 8639

VANCOUVER,
BRITISH COLUMBIA
1538 KEBET WAY
PORT COQUITLAM, BC V3C 5M5
PHONE 604 421 2822
FAX: 604 421 31 13

WINNIPEG, MANITOBA
54 PRINCESS STREET
WINNIPEG, MANITOBA R3B 1K2
PHONE: 204 942 5205
FAX: 204 956 4251

AUSTRALIA
UNIT 3, 6 STANTON ROAD
SEVEN HILLS, NSW 2147,
AUSTRALIA
PHONE: (61) (2) 9674 5455
FAX: (61) (2) 9674 2495

UNIT 8, 5 KELLETTS ROAD
ROWVILLE, VICTORIA, 3178
AUSTRALIA
PHONE: (61) (3) 9753 4355
FAX: (61) (3) 9753 4366

AMÉRICA DEL SUR
APTDO. 0818 00440
CIUDAD DE PANAMÁ, PANAMÁ
PHONE: +507 261 5347
FAX: +507 261 5355

CENTRO AMÉRICA Y CARIBE
RESIDENCIAL PINARES DE SUIZA
POL. 15 #44,
NVA. SAN SALVADOR, EL SALVADOR
PHONE: +503 2288 1519
FAX: +503 2288 1518

CHINA
ROOM NO. A 8421,
JIAHUA BUSINESS CENTER
808 HONG QIAO ROAD
SHANGHAI 200030, CHINA
PHONE: (86 21) 6447 3060
FAX: (86 21) 6407 8620

GERMANY
DIESELSTRASSE 22
D 85551 KIRCHHEIM
MUNICH, GERMANY
PHONE: +49 89 90 5080
FAX: +49 89 90 50 8492

INDIA
14, COMMERCE AVENUE
MAHAGANESH COLONY
RAUD ROAD
PUNE 41 1 038
MAHARASHTRA, INDIA
PHONE: 91 20 25 45 95 31
FAX: 91 20 25 45 95 30

ITALY
BALDOR ASR AG
SUCCURSALE DI MENDRISIO
VIA BORROMINI, 20A
CH 6850 MENDRISIO
SWITZERLAND
PHONE: 0041 91 640 99 50
FAX: 0041 91 630 26 33

JAPAN
DIA BLDG 802,
2 21 1 TSURUY A CHO,
KANAGAWA KU
YOKOHAMA, 221 0835, JAP AN
PHONE: 81 45 412 4506
FAX: 81 45 412 4507

KOREA
ROOM 208 37
INCHEON INDUSTRIAL GOODS
CIRCULATING CENTER
SONGHYEON 3 DONG, DONG GU
INCHEON. KOREA, 401 705
PHONE: (82) 32 588 3253
FAX: (82) 32 588 3254

MÉXICO
KM. 2.0 BLVD. AL AEROPUERTO
LEÓN 37545, GUANAJUATO,
MÉXICO
PHONE: 52 477 761 2030
FAX: 52 477 761 2010

MIDDLE EAST & NORTH AFRICA
VSE INTERNATIONAL CORP.
3233 NORTH ARLINGTON HEIGHTS
SUITE 100W
ARLINGTON HEIGHTS, IL 60004
PHONE: 847 590 5547
FAX: 847 590 5587

SINGAPORE
51 KAKI BUKIT ROAD
2 KB WAREHOUSE COMPLEX
SINGAPORE 417863
PHONE: (65) 6744 2572
FAX: (65) 6747 1708

SWITZERLAND
POSTFACH 73
SCHUTZENSTRASSE 59
CH 8245 FEUER THALEN
SWITZERLAND
PHONE: +41 52 647 4700
FAX: +41 52 659 2394

TAIWAN
1F, NO 126 WENSHAN 3RD STREET,
NANTUN DISTRICT, TAICHUNG CITY 408
TAIWAN R.O.C
PHONE: (886) 4 238 04235
FAX: (886) 4 238 04463

UNITED KINGDOM
6 BRISTOL DISTRIBUTION PARK
HAWKLEY DRIVE
BRISTOL BS32 0BF U.K.
PHONE: +44 1454 850000
FAX: +44 1454 859001

850-0307

BALDOR®

BALDOR ELECTRIC COMPANY
P.O. Box 2400
Ft. Smith, AR 72901–2400
(479) 646–4711
Fax (479) 648–5792
www.baldor.com

© 2007 Baldor Electric Company
MN850

Printed in USA
3/07