BACnet Communications Expansion Board for VS1 H2-Technology Drives Catalog No. EXBHH015A01

8/09 **Installation & Operating Manual** MN769

Any trademarks used in this manual are the property of their respective owners.

Important:

Be sure to check www.baldor.com for the latest software, firmware and drivers for your VS1 product. Also, you can download the latest version of this manual in Adobe Acrobat PDF format.

Information contained in this document has been gathered from the various organizations that support the communications technologies used.

www.bacnet.org

Table of Contents

Chapter 1
Introduction
1.1 Getting Assistance from Baldor 1-1
1.2 Introduction. 1-1
1.3 Safety Notice 1-1
1.4 Limited Warranty. 1-2

Chapter 2
Expansion Board Description
2.1 Expansion Board Description 2-1

Chapter 3
Installation
3.1 Installation. 3-1
3.2 Receiving & Inspection 3-1
3.3 Board Installation 3-1
3.4 BACnet Connections 3-2
3.5 Diagnostic LEDs 3-3

Chapter 4
Setup and Operation
4.1 Configure the Drive. 4-1
4.2 Drive Terminal Connections 4-2
4.3 Points and Objects 4-3

Appendix A
BACnet Specification A-1

Appendix B
VS1 H2-Technology BACnet Configuration Notes
B.1 VS1 H2-Technology BACnet Configuration B-1
B.2 Monitoring B-1
B.2.1 To Monitor the Drive Condition and Inputs B-1
B.2.2 Reading and Resetting Faults B-1
B.2.3 Drive Behavior at Loss of Communication B-1
B.3 Command and Control. B-1
B.3.1 Control Mode, Source and Command B-1
B.3.2 Digital Outs B-2
B.3.3 Control. B-2
B.4 Mailbox Function Points B-2
B.4.1 Reading a Drive Parameter B-2
B.4.2 Writing to a Drive Parameter B-2
B.5 BACnet Installation and Configuration B-2
B.5.1 Drive Operates Correctly Without Network Enabled. B-2
B.5.2 Wiring and Cabling Checklist B-2
B.5.3 Drive Configuration B-2

Appendix C
Hex to Binary Chart C-1

Chapter 1
Introduction

Baldor controls represent the latest technology in microprocessor based motor controls. In addition to the user programmable parameters available in every control, many different expansion boards are available from Baldor to further customize the control to most any application. These expansion boards are compatible with drives designed upon the H2-Technology platform.

1.1 Getting Assistance from Baldor

For technical assistance, contact your local Baldor District Office. Before calling, please review the troubleshooting section of this manual and you will be asked for the drive model number or catalog number that is located on the Nameplate.

1.2 Introduction

Table 1-1 VS1 Expansion Boards

Board Name	Catalog No.	Manual No.
Ethernet Server Expansion Board	EXBHH001AXX	MN751
Isolated Input Expansion Board	EXBHH003AXX	MN753
High Resolution Analog Board	EXBHH005AXX	MN754
Master Pulse Reference/isolated Pulse Follower	EXBHH007AXX	MN755
DeviceNet / EtherNet/IP / Modbus/TCP Exp Board	EXBHH013AXX	MN756
PROFIBUS DP Expansion Board	EXBHH014AXX	MN758
BACnet Communications Expansion Board	EXBHH015AXX	MN769
LonWorks Communications Expansion Board	EXBHH016AXX	MN759
Metasys N2 Communications Expansion Board	EXBHH017AXX	MN770

1.3 Safety Notice

This equipment contains voltages that may be as high as 1000 volts! Electrical shock can cause serious or fatal injury. Only qualified personnel should attempt the start-up procedure or troubleshoot this equipment.
This equipment may be connected to other machines that have rotating parts or parts that are driven by this equipment. Improper use can cause serious or fatal injury. Only qualified personnel should attempt the start-up procedure or troubleshoot this equipment.

CLASSIFICATIONS OF CAUTIONARY STATEMENTS

WARNING: **Indicates a potentially hazardous situation which, if not avoided, could result in injury or death.**

CAUTION: **Indicates a potentially hazardous situation which, if not avoided, could result in damage to property.**

PRECAUTIONS

WARNING: **Do not touch any circuit board, power device or electrical connection before you first ensure that power has been disconnected and there is no high voltage present from this equipment or other equipment to which it is connected. Electrical shock can cause serious or fatal injury. Only qualified personnel should attempt the start-up procedure or troubleshoot this equipment.**

WARNING: **Be sure that you are completely familiar with the safe operation of this equipment. This equipment may be connected to other machines that have rotating parts or parts that are controlled by this equipment. Improper use can cause serious or fatal injury. Only qualified personnel should attempt the start-up procedure or troubleshoot this equipment.**

WARNING: **Be sure the system is properly grounded before applying power. Do not apply AC power before you ensure that all grounding instructions have been followed. Electrical shock can cause serious or fatal injury.**

WARNING: **Do not remove cover for at least five (5) minutes after AC power is disconnected to allow capacitors to discharge. Dangerous voltages are present inside the equipment. Electrical shock can cause serious or fatal injury.**

WARNING: **Improper operation of control may cause violent motion of the motor shaft and driven equipment. Be certain that unexpected motor shaft movement will not cause injury to personnel or damage to equipment. Peak torque of several times the rated motor torque can occur during control failure.**

WARNING: **Motor circuit may have high voltage present whenever AC power is applied, even when motor is not rotating. Electrical shock can cause serious or fatal injury.**

CAUTION: **To prevent equipment damage, be certain that the electrical service is not capable of delivering more than the maximum line short circuit current amperes listed in the appropriate control manual, 240 VAC, 480 VAC or 600 VAC maximum per control rating.**

CAUTION: **Before you proceed, be sure to read and become familiar with the safety precautions at the beginning of this manual. If you have any questions, seek expert advise before you proceed. Do not proceed if you are unsure of the safety precautions or any procedure.**

CAUTION: **Be sure all packing materials are removed from the board. Conductive foam may be present on the connectors to prevent static build up during shipping. This can prevent proper circuit operation.**

CAUTION: **Static electricity damages electrical components. This board has static sensitive components installed. Be sure to comply with ESD (Electro Static Discharge) procedures when handling circuit boards and components.**

1.4 Limited Warranty

For a period of two (2) years from the date of original purchase, BALDOR will repair or replace without charge controls and accessories which our examination proves to be defective in material or workmanship. This warranty is valid if the unit has not been tampered with by unauthorized persons, misused, abused, or improperly installed and has been used in accordance with the instructions and/or ratings supplied. This warranty is in lieu of any other warranty or guarantee expressed or implied. BALDOR shall not be held responsible for any expense (including installation and removal), inconvenience, or consequential damage, including injury to any person or property caused by items of our manufacture or sale. (Some states do not allow exclusion or limitation of incidental or consequential damages, so the above exclusion may not apply.)

In any event, BALDOR's total liability, under all circumstances, shall not exceed the full purchase price of the control. Claims for purchase price refunds, repairs, or replacements must be referred to BALDOR with all pertinent data as to the defect, the date purchased, the task performed by the control, and the problem encountered. No liability is assumed for expendable items such as fuses.

Goods may be returned only with the written notification including BALDOR Return Authorization Number and any return shipments must be prepaid.

Chapter 2
Expansion Board Description

2.1 Expansion Board Description

BACnet stands for Building Automation and Control Networks. It is a protocol designed to be used in but not limited to the following applications: HVAC control, Fire detection and alarm, Lighting control, Security, Elevators, and Utility company interface. In short it is a communications protocol designed for building automation. The BACnet protocol uses objects to define information for particular functions a device is to follow. An object can represent digital I/O, analog I/O, functions for a device to follow, data to be collected, or functions to be implemented in a network of devices. The messages used between the client and server are called “services”. These services are implemented by the server when a client sends out the message. Services are named to describe what is to be done by the recipient. Service names will often contain an object’s descriptor along with the property of that object to be implemented. BACnet is capable of being used on various hardware protocols. For RS485 it uses the Point-to-Point (PTP) or the Master-Slave/Token-Passing (MS/TP) protocol.

Chapter 3
Installation

3.1 Installation

CAUTION: **Before you proceed, be sure to read and become familiar with the safety precautions at the beginning of this manual. Do not proceed if you are unsure of the safety precautions described. If you have any questions, contact Baldor before you proceed.**

3.2 Receiving & Inspection

1. Observe the condition of the shipping container and report any damage immediately to the commercial carrier that delivered your control.
   Note: The board has static sensitive components installed. Be sure to comply with ESD (Electro Static Discharge) mitigation procedures when handling the board.
2. Remove the control from the shipping container and remove all packing materials from the control. The container and packing materials may be retained for future use.
3. Verify that the part number of the control you received is the same as the part number listed on your purchase order.
4. Inspect the control for external physical damage that may have been sustained during shipment and report any damage immediately to the commercial carrier that delivered your control.
5. If the control is to be stored for several weeks before use, be sure that it is stored in a location that conforms to published storage humidity and temperature specifications stated in this manual.

3.3 Board Installation

The board has static sensitive components installed. Be sure to comply with ESD (Electro Static Discharge) procedures, such as the use of a (Static discharge) wrist strap to ground, when handling any component boards.

CAUTION: **Be sure to accomplish this work without the presence of power of any kind.**

1. Remove the expansion board from the shipping container.
2. Remove all packing material from the board.

CAUTION: **Be sure all packing materials are removed from the board. Conductive foam may be present on the connectors to prevent static build up during shipping. This can prevent proper circuit operation.**

3. Be sure drive is not in operation and is secured from inadvertent control.
4. Remove all power sources from the control.
5. Wait at least 5 minutes for internal capacitors to discharge.
6. Utilize ESD Protective measures before handling boards.
7. Refer to the drive manual and remove the enclosure cover.
8. Open the control cover and locate Slots 1 & 2, see Figure 3-1.
   Note: Slot 3 is reserved for a feedback board only (encoder or resolver).
9. Install the expansion board in Slot 1 or 2. Be sure the board is securely pressed downward and makes good contact with the 48 pin connector in the slot position.
10. Secure the expansion board in the slot using the screw originally provided with the drive.

Figure 3-1 Expansion Board Location

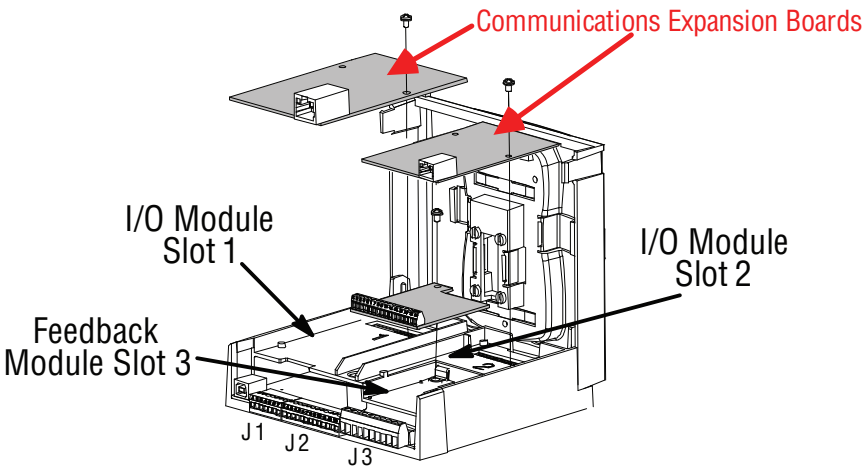

11. The mechanical installation of the expansion board is complete.

3.4 BACnet Connections

The EXBHH015AXX board is a MS/TP device for a BACnet application which utilizes RS485 serial communication. The wiring involved should adhere to the EIA/TIA-485 specification for serial communication.

Figure 3-2 EXBHH015AXX Connector and Jumper Locations

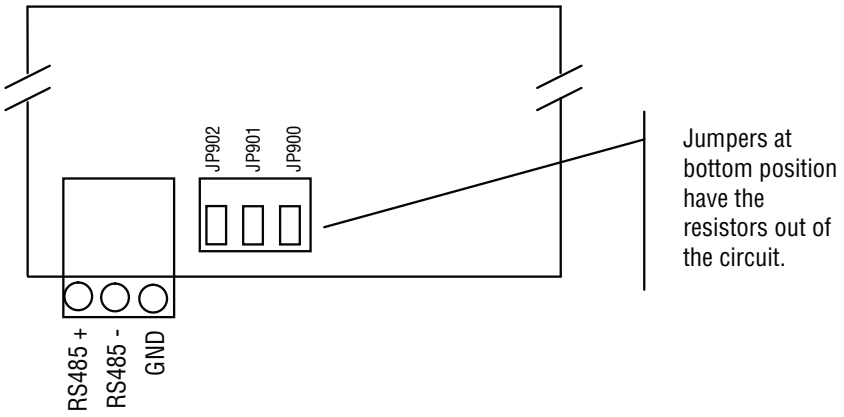

JP900 and JP902 are the bias resistors and should not be changed from the default position (Jumpers at the bottom). JP901 is the termination resistor. With the jumper at the bottom the resistor is not used. Move this jumper to the top and the resistor is put into the circuit. When the drive utilizing this option board is the last device on the RS-485 network the termination resistor is needed. In all other cases the resistor is not needed.

3.5 Diagnostic LEDs

Figure 3-3 BACnet Board LED Locations

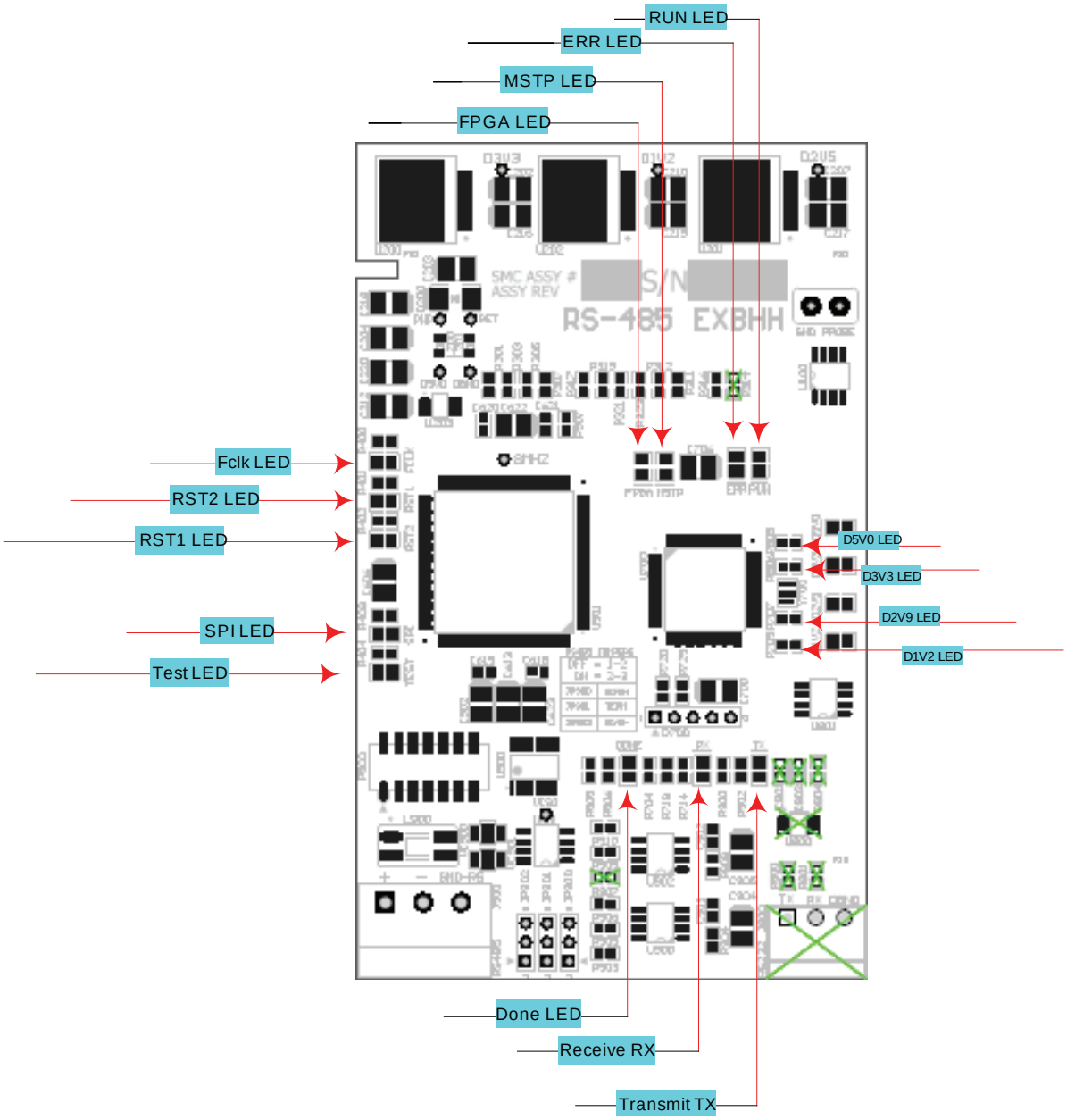

Note: Board only functions in drives with V1.22.04 or later F/W.

Table 3-1 BACnet Board LEDs

LED	Name	Function	Color	Purpose	Normal Operation
D605	FCLK	Clock	Green	Timing	Flashing
D602	RST2	Reset	Orange	Board is in Reset	Off
D601	RST1	Reset	Orange	Board Received Reset	Off
D603	SPI	Test	Orange	Used in Manufacturing	Off
D604	TEST	Test	Green	Used in Manufacturing	Off
D801	FPGA	State	Green	FPGA Configured	Rapid Flash
D800	MSTP	Diagnostic	Green	Comms OK	Flashing
D704	ERR	Diagnostic	Red	Fault	Off
D705	RUN	Diagnostic	Green	Bd running	Flashing - one/sec
D700	D5V0	P/S	Amber	P/S OK	On - Steady
D701	D2V5	P/S	Amber	P/S OK	On - Steady
D702	D3V3	P/S	Amber	P/S OK	On - Steady
D703	D1V2	P/S	Amber	P/S OK	On - Steady
D500	Done	State	Green	Xilinx Config Complete	On - Steady
D900	RX	Diagnostic	Green	Receive	Flashes during Communication
D901	TX	Diagnostic	Green	Transmit	

Chapter 4
Set-up and Operation

To utilize the BACnet option board a few setup procedures need to be completed first. Configure the drive to recognize the BACnet option board. Connect an enable, forward, reverse, and external trip connections to the drive's main terminal block. Identify which objects will be needed for operation.

4.1 Configure the Drive

A few parameters must be set before the drive can be controlled over the network. These parameters will not be visible unless the option board is installed. The following is how to set up the drive utilizing the keypad or by Mint WorkBench. These settings will allow the drive to be controlled over the network. If the drive is to be run in one of the standard modes and not over the network then steps 1 and 2 will not be necessary but 3 through 6 will need to be set to be able to read and write to parameters.

1. Set the "Advanced Prog" "Level 1", "Input Setup" "Operating Mode" (P1401) to Network.
2. Set the "Advanced Prog" "Level 1", "Input Setup" "Command Source" (P1402) to Network.
3. Set the "Advanced Prog" "Level 1", "Communication","OPTX Protocol" (1720 or 1770)* to "BACnet MSTP".
4. Set the "Advanced Prog" "Level 1", "Communication", "OPTX Baud Rate" (1721 or 1771)* to the value of the network baud rate.
5. Set the "Advanced Prog" "Level 1", "Communication", "OPTX MAC ID" (1722 or 1772)* to the desired MAC ID address.
6. Use the Local/Remote key to place the drive in Remote mode.

Note: OPTX is the slot "X" where the EXB is installed. For example, if the EXB is installed in Slot 1 this is OPT1 Protocol (P1720), Slot 2 is OPT2 Protocol (P1770).

Parameter 1701 "BAUD RATE" in the COMMUNICATION block is for the on board RS485 Modbus RTU connector and will have no effect on the option board's baud rate. The same is for P1704 DRIVE ADDRESS.

Table 4-1 Drive parameters associated when the BACnet option is installed

Block Title	Parameter	P	Drive Adjustable Settings	Factory	EXBHH015A01 Allowable Setting
Communication	OPT1 PROTOCOL OPT2 PROTOCOL	1720 1770	0 = None 1 = Devicenet 2 = Modbus/TCP 3 = EtherNet/IP 4 = Profibus 5 = WebBrowser 6 = BACnet MSTP 7 = Metasys N2 8 = LonWorks	0 = None	6
	OPT1 BAUD RATE OPT2 BAUD RATE	1721 1771	0 = Autobaud 1 = 9.6 KBPS 2 = 19.2 KBPS 3 = 31.25 KBPS 4 = 45.45 KBPS 5 = 93.75 KBPS 6 = 125 KBPS 7 = 187.5 KBPS 8 = 250 KBPS 9 = 500 KBPS 10 = 1.5 MBPS 11 = 3 MBPS 12 = 6 MBPS 13 = 12 MBPS	0 = Autobaud	0,1,2 (Use "0" for Baud Rates 38,400 & 76,800)
	OPT1 MAC ID OPT2 MAC ID	1722 1772	0 - 4095	0	0 -127

4.2 Drive Terminal Connections

Figure 4-1 Shows the required terminal connections for the drive to run in network mode.

Figure 4-1 Terminal Strip Connection Diagram

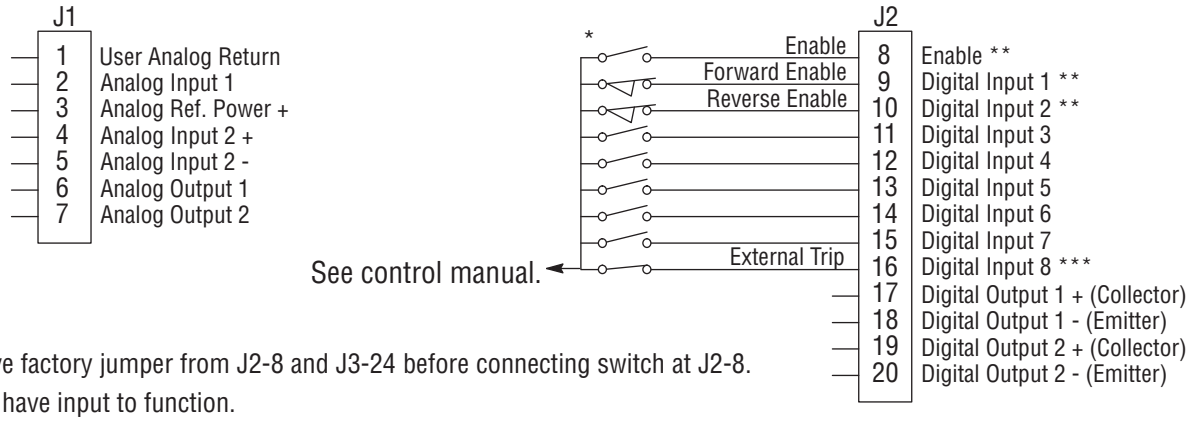

NOTES:

* Remove factory jumper from J2-8 and J3-24 before connecting switch at J2-8.

** Must have input to function.

*** Optional.

See control manual for recommended tightening torques.

J2-8	CLOSED allows normal control operation. OPEN disables the control and the motor coasts to a stop.
J2-9	CLOSED to enable operation in the Forward direction. OPEN to disable Forward operation (drive will decel to a stop if a network Forward command is still present). Reverse operation is still possible if J2-10 is closed.
J2-10	CLOSED to enable operation in the Reverse direction. OPEN to disable Reverse operation (drive will decel to a stop if a network Reverse command is still present). Forward operation is still possible if J2-9 is closed.
J2-16	Optional External Trip input (not required). If used, you must set Level 2 Drive Protect block, External Trip to “ON”. CLOSED allows normal operation. OPEN causes an external trip to be received by the control (when programmed to “ON”).

4.3 Points and Objects

Objects are used to send and read commands, values, and digital I/O points on the drive. The objects are broken down into types listed below:

Binary Value (BV)	Analog Value (AV)
Binary Input (BI)	Analog Input (AI)
Binary Output (BO)	Analog Output (AO)

Once the drive is setup to run over the network then the drive is ready to respond to these objects. The following tables are a list of all the objects available with the EXBHH015AXX option board.

For a more detailed explanation of these parameters see manual MN744.

Table 4-1 Binary Valve (BV) Object Type

Modbus Address	BACnet Object Name	BACnet Object Type	Object Instance	Active Text	Inactive Text	Read/Write (R/W) Read Only (R)
1	NULL_MODE	BV	1	Enabled	Inactive	R/W
2	TORQUE_MODE	BV	2	Enabled	Inactive	R/W
3	SPEED_MODE	BV	3	Enabled	Inactive	R/W
4	ORIENTATION_MODE	BV	4	Enabled	Inactive	R/W
5	POSITION_CMD_ABS_MODE	BV	5	Enabled	Inactive	R/W
6	POSITION_CMD_INC_MODE	BV	6	Enabled	Inactive	R/W
7	POSITION_TRACKING_ MODE	BV	7	Enabled	Inactive	R/W
8	POSITION_CMD_EXTERNAL_ MODE	BV	8	Enabled	Inactive	R/W
9	HOMING_MODE	BV	9	Enabled	Inactive	R/W
10	PROCESS_TORQUE_MODE	BV	10	Enabled	Inactive	R/W
11	PROCESS_VELOCITY_MODE	BV	11	Enabled	Inactive	R/W
13	NETWORK_MODE_ CURRENT_LIMITING	BV	12	Enabled	Inactive	R/W
14	SECURE_ COMMUNICATIONS	BV	13	Secure	Unlocked	R/W
15	JOG_CONTROL_MODE	BV	14	Enabled	Inactive	R/W
16	ENABLE_POLL_ SEQUENCING	BV	15	Enabled	Inactive	R/W
33	LOCAL_MODE	BV	16	Local	Inactive	R/W
34	TERMINAL_STRIP	BV	17	Remote	Inactive	R/W
35	NETWORK	BV	18	Network	Inactive	R/W
38	PARAM_TABLE_1	BV	19	Enabled	Inactive	R/W
39	PARAM_TABLE_2	BV	20	Enabled	Inactive	R/W
40	PARAM_TABLE_3	BV	21	Enabled	Inactive	R/W
41	PARAM_TABLE_4	BV	22	Enabled	Inactive	R/W
42	ACC_DEC_GROUP_1	BV	23	Enabled	Inactive	R/W
43	ACC_DEC_GROUP_2	BV	24	Enabled	Inactive	R/W
65	FORCE_FAULT	BV	25	Yes	No	R/W
66	FAULT_RESET	BV	26	Yes	No	R/W
78	STOP_COMMAND	BV	27	Stop	Inactive	R/W
79	FORWARD_COMMAND	BV	28	Forward	Inactive	R/W
80	REVERSE_COMMAND	BV	29	Reverse	Inactive	R/W
81	BIPOLAR_COMMAND	BV	30	Bipolar	Inactive	R/W
82	DRIVE_ENABLE	BV	31	Enabled	Disabled	R/W

Table 4-1 Binary Valve (BV) Object Type Continued

Modbus Address	BACnet Object Name	BACnet Object Type	Object Instance	Active Text	Inactive Text	R/W
10001	DRIVE_ENABLE	BV	32	Enabled	Disabled	R
10002	DRIVE_READY	BV	33	Ready	Inactive	R
10003	DRIVE_ON	BV	34	On	Inactive	R
10004	DRIVE_FORWARD	BV	35	Forward	Inactive	R
10005	DRIVE_REVERSE	BV	36	Reverse	Inactive	R
10006	DRIVE_STOP	BV	37	Stop	Inactive	R
10007	DRIVE_JOG	BV	38	Jog	Inactive	R
10008	MOTOR_FORWARD	BV	39	Forward	Inactive	R
10009	MOTOR_REVERSE	BV	40	Reverse	Inactive	R
10010	DRIVE_TORQUE	BV	41	Torque	Inactive	R
10011	DRIVE_SPEED	BV	42	Speed	Inactive	R
10012	DRIVE_V_F	BV	43	V/F	Inactive	R
10013	FLASH_BOOT	BV	44	Flash	Inactive	R
10014	CLOSE_LOOP_VECTOR_MODE	BV	45	Closed Loop	Inactive	R
10015	OPEN_LOOP_VECTOR_MODE	BV	46	Open Loop	Inactive	R
10016	BRUSHLESS_DC_MODE	BV	47	Brushless	Inactive	R
10017	DYNAMIC_BRAKE_ON	BV	48	Brake	Inactive	R
10018	FOLDBACK_ACTIVE	BV	49	Foldback	Inactive	R
10019	DRIVE_FAULT_ACTIVE	BV	50	Fault	Inactive	R
10020	DRIVE_WARNING_ACTIVE	BV	51	Warning	Inactive	R
10021	AT_SPEED	BV	52	Yes	No	R
10022	AT_ZERO_SPEED	BV	53	Yes	No	R
10023	FOLLOWING_ERROR	BV	54	Yes	No	R
10024	OVERLOAD	BV	55	Yes	No	R
10025	ACCELERATE	BV	56	Yes	No	R
10026	CONSTANT_SPEED	BV	57	Yes	No	R
10027	DECELERATE	BV	58	Yes	No	R
10028	KEYPAD_CONTROL	BV	59	Local	Remote	R
10029	AT_POSITION	BV	60	Yes	No	R
10030	AT_HOME	BV	61	Yes	No	R
10031	PROCESS_ERROR	BV	62	Yes	No	R
10032	NETWORK_CONTROL	BV	63	Yes	No	R
10033	POSITIVE_TORQUE	BV	64	Yes	No	R
10034	NEGATIVE_TORQUE	BV	65	Yes	No	R
10035	AT_SPEED_BAND	BV	66	Yes	No	R
10036	AT_SET_SPEED	BV	67	Yes	No	R
10037	MOTOR_CURRENT_OVERLOAD	BV	68	Yes	No	R
10038	MOTOR_CURRENT_ UNDERLOAD	BV	69	Yes	No	R

Table 4-2 Binary Input (BI) Object Type

Modbus Address	BACnet Object Name	BACnet Object Type	Object Instance	Active Text	Inactive Text	R/W
10065	DIGITAL_INPUT_1	BI	0	On	Off	R
10066	DIGITAL_INPUT_2	BI	1	On	Off	R
10067	DIGITAL_INPUT_3	BI	2	On	Off	R
10068	DIGITAL_INPUT_4	BI	3	On	Off	R
10069	DIGITAL_INPUT_5	BI	4	On	Off	R
10070	DIGITAL_INPUT_6	BI	5	On	Off	R
10071	DIGITAL_INPUT_7	BI	6	On	Off	R
10072	DIGITAL_INPUT_8	BI	7	On	Off	R
10073	DIGITAL_INPUT_9	BI	8	On	Off	R

Table 4-2 Binary Output (BO) Object Type

Modbus Address	BACnet Object Name	BACnet Object Type	Object Instance	Active Text	Inactive Text	R/W
97	DIGITAL_OUT_1	BO	0	On	Off	R/W
98	DIGITAL_OUT_2	BO	1	On	Off	R/W
99	RELAY_OUT_1	BO	2	On	Off	R/W
100	RELAY_OUT_2	BO	3	On	Off	R/W
101	OPTION_1_OUT_1	BO	4	On	Off	R/W
102	OPTION_1_OUT_2	BO	5	On	Off	R/W
103	OPTION_2_OUT_1	BO	6	On	Off	R/W
104	OPTION_2_OUT_2	BO	7	On	Off	R/W

Table 4-3 Analog Value (AV) Object Type

Modbus Address	BACnet Object Name	BACnet Object Type	Object Instance	Active Text	R/W
40001	Control Mode	AV			R
40003	Control Source	AV			R/W
40005	Control Command	AV			R/W
40013	Hz Speed Reference	AV	0	Hz	R/W
40013	RPM Speed Reference	AV	1	RPM	R/W
41012	Motor Current	AV	2	A	R
41062	Motor Torque	AV	3	NM	R
41156	Estimated Power	AV	4	kW	R
41030	Bus Voltage	AV	5	V	R
41010	Motor Voltage	AV	6	V	R
41156	KWH Counter	AV	7	KWH	R
40029	Current Limit	AV	8	%	R/W
41026	Actual Speed Hz	AV	9	Hz	R
41134	Actual Speed RPM	AV	10	RPM	R
41048	Active Fault Code	AV	11		R
	PARAMETER_DATA	AV	12		R/W
	PARAMETER_NUMBER	AV	13		R/W

* AV 12 and 13 are used to read and write to parameters in the MODBUS address range 41000 - 49999. The parameter number in AV 13 will be read and written using AV 12.

Table 4-4 Analog Input (AI) Object Type

Modbus Address	BACnet Object Name	BACnet Object Type	Object Instance	Active Text	R/W
30001	Analog_Input_1_Low	AI	0	%	R
30003	Analog_Input_2_Low	AI	1	%	R
30005	Analog_Input_3_Low	AI	2	%	R
30007	Analog_Input_4_Low	AI	3	%	R
30010	Analog_Input_5_Low	AI	4	%	R
30012	Analog_Input_6_Low	AI	5	%	R

Table 4-5 Analog Output (AO) Object Type

Modbus Address	BACnet Object Name	BACnet Object Type	Object Instance	Active Text	R/W
40101	DAC_Output_1	AO	0		R/W
40103	DAC_Output_2	AO	1		R/W
40105	DAC_Output_3	AO	2		R/W
40107	DAC_Output_4	AO	3		R/W
40109	DAC_Output_5	AO	4		R/W
40111	DAC_Output_6	AO	5		R/W

Appendix A
BACnet Specification

BACnet Specification

Protocol Implementation Conformance Statement

Date:	March 11, 2006
Vendor Name:	Baldor
Product Name:	BACnet Expansion Board
Product Model: Number:	EXBHH15A01
Product Description:	This product will provide bi-directional communication to various Baldor VS1 drives using a BACnet system. The EXBHH15A01 can convert the different BACnet Data Link Layer options to speak directly to the drive via static mappings.

BACnet Standarized Device Profile (Annex L):

- ☒ BACnet Smart Sensor (B-SS)
- ☒ BACnet Smart Actuator (B-SA)
- ☐ BACnet Application Specific Controller (B-ASC)

BACnet Interoperability Building Blocks Supported (Annex K):

- ☒ K.1.2 BIBB - Data Sharing - ReadProperty-B (DS-RP-B)
- ☒ K.1.8 BIBB - Data Sharing - WriteProperty-B (DS-WP-B)
- ☒ K.1.8 BIBB - Data Sharing - WriteProperty-B (DS-WP-B)

Segmentation Capability:
None

Standard Object Types Supported:

- ☒ Device Object
- ☒ Analog Input
- ☒ Analog Output
- ☒ Analog Value
- ☒ Binary Input
- ☒ Binary Output
- ☒ Binbary Value

For all these properties the following apply:
1. Does not support BACnet Create Object
2. Does not support BACnet DeleteObject
3. Does not support any optional properties
4. No additional writeable properties exist
5. No proprietary properties exist
6. No range restrictions exist

Data Link Layer Options:

- ☒ MS/TP master (Clause 9), baud rate up to 76800 bps
- ☐ MS/TP slave (Clause 9), baud rate up to 76800 bps

Character Sets Supported:
Where support for multiple character sets is indicated, this does not imply that they can all be supported simultaneosly.

- [x] ANSI X3.4
- [ ] ISO 10646 (IC-4)
- [ ] ISO 10646 (UCS-2)
- [ ] ISO 8859-1
- [ ] IBM/Microsoft DBCS
- [ ] JIS C

Date	Resp	Software Version	Revision Number	Comment
3/11/08	MST	1.0	001	Initial Creation for EXBHH15A01

Appendix B

VS1 H2-Technology BACnet Configuration Notes

B.1 VS1 H2-Technology BACnet Configuration

BACnet communications terms used to command and monitor the drive:

Analog_Input Analog Input (AI)	Analog_Output Analog Output (AO)
Analog_Input and Output Analog_Value (AV)	Digital_Input Binary Input (BI)
Digital_Output Binary Output (BO)	Binary_Value (BV)

The quantity and reference numbers of these access points are as follows:
(NOTE: See Appendix B Objects Listing - For an explanation for all Objects)

AI 0-5	AO 0-5
AV 0-13	BI 0-8
BO 0-7	BV 1-69

CAUTION: **Improper drive direction may damage HVAC equipment if Reverse Enable is improperly set.**

Attention: Consider whether to Lock out Local Control from the Drive Keypad. Locking the keypad prevents the user from using the RUN and STOP keys locally at the drive.

B.2 Monitoring

B.2.1 To Monitor the Drive Condition and Inputs:

Monitor the following in the drive:

- Drive Enable BV32
- Drive Ready BV33
- Drive On BV34

To Monitor Network Control use Network Control Monitor BV63.
To Monitor the current run status of the drive use the Drive-On (RUN) BV34 STOP Bit (BV37).
To Monitor the current direction use the FORWARD (BV35) REVERSE Bit (BV36).

Monitor the Multi-Function Digital Inputs 1 (BI0) through Multi-Function Digital Input 9 (BO8) which are physical digital inputs on the drive. They can be set either by external devices, (i.e. Selector, photo eye, limit or pressure switches) or by the network. How they react or function is determined by how the drive has been programmed.
Refer to the VS1 User's Manual section on Multi-Function Digital Inputs for detailed information on the use and programming of the multi-function Digital inputs.

B.2.2 Reading and Resetting Faults:

For Drive MONITORING, Drive Enable (BV32), Drive Ready (BV33), Drive Warning (BV51) and Drive Fault Active (BV50) show the current status of the drive. Active FAULT Code MONITOR (AV11) contains the code for the most current fault. See table in troubleshooting section of drive for descriptions of the fault codes. The drive fault can be reset through FAULT RESET COMMAND (BV26). To check the status of Drive Control Mode Local/Remote use Keypad Control BV59.

CAUTION: **Because the multi-function inputs can be set by both external devices or over the network, care must be taken when connecting the multi-function inputs to external devices to ensure desired system operation.**

B.2.3 Review, Determine and Set Your Drive Behavior at Loss of Communication

Secure Communications BV13, Network Communications BV18

B.3 Command and Control

B.3.1 Control Mode, Source and Command:

To Command the Drive to Start and stop:
Select your Drive Config Speed Units (Parameter Level 2 – 2101 – as HZ or RPM when in Speed Mode and in V/F, or in RPM when in Open or Closed Vector)

Then Utilize the following:
- Speed Mode Bit BV3
- Drive Enable Bit BV31
- Stop Bit BV27

To run the drive in the forward direction:
Set The Stop Bit (Stop BV27) to Zero.
Set the RUN FORWARD COMMAND (BV28) to a One.

To run the drive in the reverse direction Set the RUN FORWARD COMMAND (BV28) to a Zero.
Then Set the RUN REVERSE COMMAND (BV29).

NOTE: If both the Forward and Reverse Bits are true, the Drive ramps to Stop.

Select your Speed Reference per your Drive Configuration

Set your Speed reference in HZ = AV0
Or
Set your Speed Reference in RPM = AV1

Other useful info:

Digital Outs BO 0 thru BO 3
- 0,1 Digital Outs
- 2,3 Relay Outs

Note: To control a digital output via the network, the output must be configured for network control in the output setup block.

Digital Outputs Multi-Function Digital Outputs 1 (BO0) through (BO3) are physical digital outputs on the drive. Their function depends on how the drive has been programmed. Refer to the VS1 User's Manual section on Multi-Function Digital Outputs for detailed information on the use and programming of the those outputs.

B.3.2 Control

Speed reference - The Speed, position, or torque references can be sent to the drive utilizing the following Analog Out (AO - *) variables.

Speed reference in HZ = AV0 Speed Reference in RPM = AV1

B.4 Mailbox Function Points

B.4.1 Reading a Drive Parameter

Two parameters are defined for the reading of any drive parameter:

- AV13 specifies the parameter to be read from the VS1 drive.
- AV12 reports the data (value) of the parameter specified in AV13. When this point is read, it retrieves data from the parameter and sends it to the controller.

B.4.2 Writing to a Drive Parameter

These same two parameters AV12 & AV13 can be used for the writing of any drive parameter:

- AV13 specifies the parameter to be written to.
- AV12 is the entry location of the value to be written to the parameter specified in AV13. When this point is written to, it will write the value to the drive. An ENTER or ACCEPT command does not need to be sent for the data to be taken by the drive. The behavior of the write is the same as with the digital operator. If the drive is running, there are a limited number of drive parameters that can be written to.

B.5 BACnet Installation and Configuration

Here is a short checklist to assist in Start-up and troubleshooting the BACnet installation and configuration. It points out some of the most common issues faced with the startup and operation of a VS1 drive on a BACnet (building automation control) network, and when diagnosing and correcting issues. Although much of the information is based on the installation and use of the drive, the information and checklist presented are useful in most BACnet networks.

Troubleshooting and diagnosis of network issues and faults typically fall into three categories:
1. Design and Installation of the BACnet network
2. Wiring/cabling issues
3. Network configuration, monitoring and troubleshooting.

Each of these areas will be discussed to help resolve common issues found in BACnet network troubleshooting.

B.5.1 Drive Operates Correctly Without Network Enabled

Test to insure drive operates properly as a standalone drive, before programming the drive for BACnet communication. Refer to the VS1 Drive User Manual for information on the drive's proper installation and operation.

B.5.2 Wiring and Cabling Checklist

Check that:
- The BACnet network cable is the correct type (See specification in Appendix A).
- Cable lengths meet the BACnet specification.
- The Network is terminated correctly - A bus terminating resistor of 120Ω is used. In a multi-drive or node machine or system, only at the end of a bus segment should the drive or node have terminating resistors.
- Network cable Is connected correctly and securely.
- Shield is continuous and single point grounded (not grounded at each drive but rather passed through grounded only at one point).

B.5.3 Drive Configuration

Check the drive to insure:
- Command mode (Run/Stop) operation parameter is set correctly.
- Speed command (Speed/Torque/Process Reference) operation parameter is set correctly.
- Correct and unique network address is assigned and used.

Appendix C
Hex to Binary Chart

C.1 Hex to Binary Chart

Table C-1 Hex/Dec Conversion

Hex	Dec	Hex	Dec	Hex	Dec	Hex	Dec	Hex	Dec
0	0	33	51	66	102	99	153	CC	204
1	1	34	52	67	103	9A	154	CD	205
2	2	35	53	68	104	9B	155	CE	206
3	3	36	54	69	105	9C	156	CF	207
4	4	37	55	6A	106	9D	157	D0	208
5	5	38	56	6B	107	9E	158	D1	209
6	6	39	57	6C	108	9F	159	D2	210
7	7	3A	58	6D	109	A0	160	D3	211
8	8	3B	59	6E	110	A1	161	D4	212
9	9	3C	60	6F	111	A2	162	D5	213
A	10	3D	61	70	112	A3	163	D6	214
B	11	3E	62	71	113	A4	164	D7	215
C	12	3F	63	72	114	A5	165	D8	216
D	13	40	64	73	115	A6	166	D9	217
E	14	41	65	74	116	A7	167	DA	218
F	15	42	66	75	117	A8	168	DB	219
10	16	43	67	76	118	A9	169	DC	220
11	17	44	68	77	119	AA	170	DD	221
12	18	45	69	78	120	AB	171	DE	222
13	19	46	70	79	121	AC	172	DF	223
14	20	47	71	7A	122	AD	173	E0	224
15	21	48	72	7B	123	AE	174	E1	225
16	22	49	73	7C	124	AF	175	E2	226
17	23	4A	74	7D	125	B0	176	E3	227
18	24	4B	75	7E	126	B1	177	E4	228
19	25	4C	76	7F	127	B2	178	E5	229
1A	26	4D	77	80	128	B3	179	E6	230
1B	27	4E	78	81	129	B4	180	E7	231
1C	28	4F	79	82	130	B5	181	E8	232
1D	29	50	80	83	131	B6	182	E9	233
1E	30	51	81	84	132	B7	183	EA	234
1F	31	52	82	85	133	B8	184	EB	235
20	32	53	83	86	134	B9	185	EC	236
21	33	54	84	87	135	BA	186	ED	237
22	34	55	85	88	136	BB	187	EE	238
23	35	56	86	89	137	BC	188	EF	239
24	36	57	87	8A	138	BD	189	F0	240
25	37	58	88	8B	139	BE	190	F1	241
26	38	59	89	8C	140	BF	191	F2	242
27	39	5A	90	8D	141	C0	192	F3	243

Table C-1 Hex/Dec Conversion Continued

Hex	Dec	Hex	Dec	Hex	Dec	Hex	Dec	Hex	Dec
28	40	5B	91	8E	142	C1	193	F4	244
29	41	5C	92	8F	143	C2	194	F5	245
2A	42	5D	93	90	144	C3	195	F6	246
2B	43	5E	94	91	145	C4	196	F7	247
2C	44	5F	95	92	146	C5	197	F8	248
2D	45	60	96	93	147	C6	198	F9	249
2E	46	61	97	94	148	C7	199	FA	250
2F	47	62	98	95	149	C8	200	FB	251
30	48	63	99	96	150	C9	201	FC	252
31	49	64	100	97	151	CA	202	FD	253
32	50	65	101	98	152	CB	203	FE	254

BALDOR SALES OFFICES

UNITED STATES

ARIZONA
PHOENIX
4211 S 43RD PLACE
PHOENIX, AZ 85040
PHONE: 602-470-0407
FAX: 602-470-0464

ARKANSAS
CLARKSVILLE
1001 COLLEGE AVE.
CLARKSVILLE, AR 72830
PHONE: 479-754-9108
FAX: 479-754-9205

CALIFORNIA
LOS ANGELES
6480 FLOTILLA
COMMERCE, CA 90040
PHONE: 323-724-6771
FAX: 323-721-5859

HAYWARD
21056 FORBES STREET
HAYWARD, CA 94545
PHONE: 510-785-9900
FAX: 510-785-9910

COLORADO
DENVER
3855 FOREST STREET
DENVER, CO 80207
PHONE: 303-623-0127
FAX: 303-595-3772

CONNECTICUT
WALLINGFORD
65 SOUTH TURNPIKE ROAD
WALLINGFORD, CT 06492
PHONE: 203-269-1354
FAX: 203-269-5485

FLORIDA
TAMPA/PUERTO RICO/ VIRGIN ISLANDS
3906 EAST 11TH AVENUE
TAMPA, FL 33605
PHONE: 813-248-5078
FAX: 813-247-2984

GEORGIA
ATLANTA
62 TECHNOLOGY DR.
ALPHARETTA, GA 30005
PHONE: 770-772-7000
FAX: 770-772-7200

ILLINOIS
CHICAGO
4 SAMMONS COURT
BOLINGBROOK, IL 60440
PHONE: 630-296-1400
FAX: 630-226-9420

INDIANA
INDIANAPOLIS
5525 W. MINNESOTA STREET
INDIANAPOLIS, IN 46241
PHONE: 317-246-5100
FAX: 317-246-5110

IOWA
DES MOINES
1800 DIXON STREET, SUITE C
DES MOINES, IA 50316
PHONE: 515-263-6929
FAX: 515-263-6515

MARYLAND
BALTIMORE
6660 SANTA BARBARA RD.
SUITE 22-24
ELKRIDGE, MD 21075
PHONE: 410-579-2135
FAX: 410-579-2677

MASSACHUSETTS
BOSTON
6 PULLMAN STREET
WORCESTER, MA 01606
PHONE: 508-854-0708
FAX: 508-854-0291

MICHIGAN
DETROIT
5993 PROGRESS DRIVE
STERLING HEIGHTS, MI 48312
PHONE: 586-978-9800
FAX: 586-978-9969

MINNESOTA
MINNEAPOLIS
21080 134TH AVE. NORTH
ROGERS, MN 55374
PHONE: 763-428-3633
FAX: 763-428-4551

MISSOURI
ST LOUIS
422 INDUSTRIAL DRIVE
MARYLAND HEIGHTS, MO 63043
PHONE: 314-298-1800
FAX: 314-298-7660

KANSAS CITY
1501 BEDFORD AVENUE
NORTH KANSAS CITY, MO 64116
PHONE: 816-587-0272
FAX: 816-587-3735

NEW YORK
AUBURN
ONE ELLIS DRIVE
AUBURN, NY 13021
PHONE: 315-255-3403
FAX: 315-253-9923

NORTH CAROLINA
GREENSBORO
1220 ROTHERWOOD ROAD
GREENSBORO, NC 27406
PHONE: 336-272-6104
FAX: 336-273-6628

OHIO
CINCINNATI
2929 CRESCENTVILLE ROAD
WEST CHESTER, OH 45069
PHONE: 513-771-2600
FAX: 513-772-2219

CLEVELAND
8929 FREEWAY DRIVE
MACEDONIA, OH 44056
PHONE: 330-468-4777
FAX: 330-468-4778

OKLAHOMA
TULSA
7170 S. BRADEN, SUITE 140
TULSA, OK 74136
PHONE: 918-366-9320
FAX: 918-366-9338

OREGON
PORTLAND
20393 SW AVERY COURT
TUALATIN, OR 97062
PHONE: 503-691-9010
FAX: 503-691-9012

PENNSYLVANIA
PHILADELPHIA
1035 THOMAS BUSCH
MEMORIAL HIGHWAY
PENNSAUKEN, NJ 08110
PHONE: 856-661-1442
FAX: 856-663-6363

PITTSBURGH
159 PROMINENCE DRIVE
NEW KENSINGTON, PA 15068
PHONE: 724-889-0092
FAX: 724-889-0094

TENNESSEE
MEMPHIS
4000 WINCHESTER ROAD
MEMPHIS, TN 38118
PHONE: 901-365-2020
FAX: 901-365-3914

TEXAS
DALLAS
3040 QUEBEC STREET
DALLAS, TX 75247
PHONE: 214-634-7271
FAX: 214-634-8874

HOUSTON
10355 W. LITTLE YORK RD.
SUITE 300
HOUSTON, TX 77041
PHONE: (281) 977-6500
FAX: (281) 977-6510

UTAH
SALT LAKE CITY
2230 SOUTH MAIN STREET
SALT LAKE CITY, UT 84115
PHONE: 801-832-0127
FAX: 801-832-8911

WISCONSIN
MILWAUKEE
1960 SOUTH CALHOUN ROAD
NEW BERLIN, WI 53151
PHONE: 262-784-5940
FAX: 262-784-1215

INTERNATIONAL SALES
FORT SMITH, AR
P.O. BOX 2400
FORT SMITH, AR 72902
PHONE: 479-646-4711
FAX: 479-648-5895

CANADA
EDMONTON, ALBERTA
4053-92 STREET
EDMONTON, ALBERTA T6E 6R8
PHONE: 780-434-4900
FAX: 780-438-2600

TORONTO
OAKVILLE, ONTARIO
2750 COVENTRY ROAD
OAKVILLE, ONTARIO L6H 6R1
PHONE: 905-829-3301
FAX: 905-829-3302

MONTREAL, QUEBEC
5155, J.A. BOMBARDIER
ST-HUBERT (QUÉBEC) CANADA
J3Z 1G4
PHONE: 514-933-2711
FAX: 514-933-8639

VANCOUVER, BRITISH COLUMBIA
1538 KEBET WAY
PORT COQUITLAM,
BRITISH COLUMBIA V3C 5M5
PHONE 604-421-2822
FAX: 604-421-3113

WINNIPEG, MANITOBA
54 PRINCESS STREET
WINNIPEG, MANITOBA R3B 1K2
PHONE: 204-942-5205
FAX: 204-956-4251

AUSTRALIA
UNIT 3, 6 STANTON ROAD
SEVEN HILLS, NSW 2147, AUSTRALIA
PHONE: (61) (2) 9674 5455
FAX: (61) (2) 9674 2495

UNIT 8, 5 KELLETTS ROAD
ROWVILLE, VICTORIA, 3178 AUSTRALIA
PHONE: (61) (3) 9753 4355
FAX: (61) (3) 9753 4366

EL SALVADOR
RESIDENCIAL PINARES DE SUIZA
POL. 15 #44,
NVA. SAN SALVADOR, EL SALVADOR
PHONE: +503 2288-1519
FAX: +503 2288-1518

CHILE
LUIS THAYER OJEDA 166,
OF 402 - PROVIDENCIA
SANTIAGO, CHILE
PHONE: +56 2 816 9900

CHINA
160 SONG SHENG ROAD
SONGJIANG INDUSTRY ZONE
SHANGHAI 201613, CHINA
PHONE: +86 21 5760 5335
FAX : +86 21 5760 5336

GERMANY
DIESELSTRASSE 22
D-85551 KIRCHHEIM
MUNICH, GERMANY
PHONE: +49 89 90 5080
FAX: +49 89 90 50 8492

INDIA
14, COMMERCE AVENUE
MAHAGANESH COLONY
PAUD ROAD
PUNE - 411038
MAHARASHTRA, INDIA
PHONE: +91 20 25 45 27 17 / 18
FAX: +91 20 25 45 27 19

INDONESIA
TALAVERA OFFICE PARK,
28TH FLOOR, SUITE M18
Jl. T.B. SIMATUPANG, KAV. 22-26
JAKARTA 12430, INDONESIA
PHONE: +62 21 7599 9879
FAX: + 62 21 7599 9878

ITALY
BALDOR ASR AG
SUCCURSALE DI MENDRISIO
VIA BORROMINI, 20A
CH-6850 MENDRISIO
SWITZERLAND
PHONE: 0041 91 640 99 50
FAX: 0041 91 630 26 33

JAPAN
DIA BLDG 802,
2-21-1 TSURUYA-CHO,
KANAGAWA-KU
YOKOHAMA, 221-0835, JAPAN
PHONE: 81-45-412-4506
FAX: 81-45-412-4507

MEXICO
LEON, GUANAJUATO
KM. 2.0 BLVD. AEROPUERTO
LEÓN 37545, GUANAJUATO, MÉXICO
PHONE: +52 477 761 2030
FAX: +52 477 761 2010

MIDDLE EAST & NORTH AFRICA
VSE INTERNATIONAL CORP.
P. O. BOX 5618
BUFFALO GROVE, IL 60089-5618
PHONE: 847 590 5547
FAX: 847 590 5587

PANAMA
AVE. RICARDO J. ALFARO
EDIFICIO SUN TOWERS MALL
PISO 2, LOCAL 55
CIUDAD DE PANAMÁ, PANAMÁ
PHONE: +507 236-5155
FAX: +507 236-0591

SINGAPORE
18 KAKI BUKIT ROAD 3, #03-09
ENTREPRENEUR BUSINESS CENTRE
SINGAPORE 415978
PHONE: (65) 6744 2572
FAX: (65) 6747 1708

SWITZERLAND
POSTFACH 73
SCHUTZENSTRASSE 59
CH-8245 FEUERTHALEN
SWITZERLAND
PHONE: +41 52 647 4700
FAX: +41 52 659 2394

TAIWAN
1F, NO 126 WENSHAN 3RD STREET,
NANTUN DISTRICT,
TAICHUNG CITY 408
TAIWAN R.O.C
PHONE: (886) 4 238 04235
FAX: (886) 4 238 04463

UNITED KINGDOM
6 BRISTOL DISTRIBUTION PARK
HAWKLEY DRIVE
BRISTOL BS32 0BF U.K.
PHONE: +44 1454 850000
FAX: +44 1454 859001

VENEZUELA
AV. ROMA. QTA EL MILAGRO. URB.
CALIFORNIA NORTE
CARACAS, 1070
VENEZUELA
PHONE/FAX: +58 212 272 7343
MOBILE: +58 414 114 8623

769-0809

Baldor Electric Company
World Headquarters
P.O. Box 2400, Fort Smith, AR 72902-2400 U.S.A., Ph: (1) 479.646.4711, Fax (1) 479.648.5792, International Fax (1) 479.648.5895
www.baldor.com

© Baldor Electric Company
All Rights Reserved. Printed in USA.
MN769
08/09