VS1PF LonWorks
Communications Adapter Board
Catalog No. VS1PF-LON

5/09 **Installation & Operating Manual** MN763LW

Any trademarks used in this manual are the property of their respective owners.

Important:
Be sure to check www.baldor.com for the latest software, firmware and drivers for your VS1PF product. Also you can download the latest version of this manual in Adobe Acrobat PDF format.

Table of Contents

Chapter 1
Introduction
1.1 Getting Assistance from Baldor 1-1
1.2 Introduction 1-1
1.3 Safety Notice 1-1
1.4 Limited Warranty 1-2

Chapter 2
Adapter Board Description
2.1 Adapter Board Description 2-1
2.1.1 Technical Features of LonWorks 2-1

Chapter 3
Installation
3.1 Installation 3-1
3.2 Receiving and Inspection. 3-1
3.3 Board Installation 3-1
3.4 Cable Connections and Powerup 3-2

Chapter 4
Setup and Operation
4.1 Set-up and Operation 4-1
4.1.1 Network Connection 4-1
4.1.2 Network Termination 4-1
4.1.3 Suggested Network Cable. 4-2
4.1.4 LED Information 4-2
4.2 LonWorks Terminal Strip Connections. 4-4

Chapter 5
LonWorks Connection and Configuration
5.1 Lonworks Software Connection. 5-1
5.1.1 Keypad parameters of LonWorks 5-1
5.1.2 Functional Profile 5-2
5.1.3 Network Input Variables. 5-2
5.1.4 Network Output Variables 5-2
5.2 Drive Object 5-3
5.2.1 Network Input Variables. 5-3
5.2.2 Network Output Variables 5-5
5.2.3 Network Configuration Variable 5-7
5.3 User Object 5-13
5.3.1 Network Input Variables. 5-13
5.3.2 Network Output Variables 5-14
5.3.3 Network Configuration Variable 5-15

Appendices
A. Abbreviations

Chapter 1
Introduction

1.1 Getting Assistance from Baldor

For technical assistance, contact your Baldor District Office. Before calling, please review the troubleshooting section of this manual. You will be asked for the drive model number or catalog number that is located on the Nameplate along with the drive serial number.

1.2 Introduction

Baldor controls represent the latest technology in microprocessor based motor controls. In addition to the user programmable parameters available in every control, many different adapter boards are available from Baldor to further customize the control to most any application. These adapter boards are compatible with the VS1PF drive.

Table 1-1 VS1 Adapter Boards Available

Board Name	Catalog No.	Manual No.
Modbus-RTU Communications Adapter Board	VS1PF-MBUS	MN763MB
Profibus DP Communications Adapter Board	VS1PF-PBUS	MN763PB
DeviceNet Communications Adapter Board	VS1PF-DNET	MN763DN
MODBUS TCP/IP Communications Adapter Board	VS1PF-MBTCP	MN763MBT
LonWorks Communications Adapter Board	VS1PF-LON	MN763LW
Metasys N2 Communications Adapter Board	VS1PF-MET	MN763MN2
BACnet Communications Adapter Board	VS1PF-BAC	MN763BN

1.3 Safety Notice

This equipment contains voltages that may be as high as 1000 volts! Electrical shock can cause serious or fatal injury. Only qualified personnel should attempt the start-up procedure or troubleshoot this equipment. This equipment may be connected to other machines that have rotating parts or parts that are driven by this equipment. Improper use can cause serious or fatal injury. Only qualified personnel should attempt the start-up procedure or troubleshoot this equipment.

Precautions: Classifications of cautionary statements

WARNING: **Do not touch any circuit board, power device or electrical connection before you first ensure that power has been disconnected and there is no high voltage present from this equipment or other equipment to which it is connected. Electrical shock can cause serious or fatal injury. Only qualified personnel should attempt the start-up procedure or troubleshoot this equipment**

WARNING: **Be sure that you are completely familiar with the safe operation of this equipment. This equipment may be connected to other machines that have rotating parts or parts that are controlled by this equipment. Improper use can cause serious or fatal injury. Only qualified personnel should attempt the start-up procedure or troubleshoot this equipment.**

WARNING: **Be sure the system is properly grounded before applying power. Do not apply AC power before you ensure that all grounding instructions have been followed. Electrical shock can cause serious or fatal injury.**

WARNING: **Do not remove cover for at least five (5) minutes after AC power is disconnected to allow capacitors to discharge. Dangerous voltages are present inside the equipment. Electrical shock can cause serious or fatal injury.**

WARNING: **Improper operation of control may cause violent motion of the motor shaft and driven equipment. Be certain that unexpected motor shaft movement will not cause injury to personnel or damage to equipment. Peak torque of several times the rated motor torque can occur during control failure.**

WARNING: **Motor circuit may have high voltage present whenever AC power is applied, even when motor is not rotating. Electrical shock can cause serious or fatal injury.**

Caution: **To prevent equipment damage, be certain that the electrical service is not capable of delivering more than the maximum line short circuit current amperes listed in the appropriate control manual, 240 VAC, 480 VAC or 600 VAC maximum per control rating.**

Caution: **Before you proceed, be sure to read and become familiar with the safety precautions at the beginning of this manual. If you have any questions, seek expert advise before you proceed. Do not proceed if you are unsure of the safety precautions or any procedure.**

Caution: **Be sure all packing materials are removed from the board. Conductive foam may be present on the connectors to prevent static build up during shipping. This can prevent proper circuit operation.**

Caution: **Static electricity damages electrical components. This board has static sensitive components installed. Be sure to comply with ESD (Electro Static Discharge) procedures when handling circuit boards and components.**

1.4 Limited Warranty

For a period of two (2) years from the date of original purchase, BALDOR will repair or replace without charge controls and accessories which our examination proves to be defective in material or workmanship. This warranty is valid if the unit has not been tampered with by unauthorized persons, misused, abused, or improperly installed and has been used in accordance with the instructions and/or ratings supplied. This warranty is in lieu of any other warranty or guarantee expressed or implied. BALDOR shall not be held responsible for any expense (including installation and removal), inconvenience, or consequential damage, including injury to any person or property caused by items of our manufacture or sale. (Some states do not allow exclusion or limitation of incidental or consequential damages, so the above exclusion may not apply.)

In any event, BALDOR's total liability, under all circumstances, shall not exceed the full purchase price of the control. Claims for purchase price refunds, repairs, or replacements must be referred to BALDOR with all pertinent data as to the defect, the date purchased, the task performed by the control, and the problem encountered. No liability is assumed for expendable items such as fuses.

Goods may be returned only with the written notification including BALDOR Return Authorization Number and any return shipments must be prepaid.

Chapter 2
Adapter Board Description

2.1 LonWorks Adapter Board Description

LonWorks Communications Adapter Board
Catalog No. VS1PF-LON
This adapter board offers the communication protocol LonWorks which is generally used for factory or building automation.

There is no Master/Slave concept in the LonWorks network but all the nodes (devices) communicate with each other through LonTalk protocol and LonWorks nodes do not have dependence on other manufacturers. The independence is only available by using Standard Network Variable Type (SNVT), which is provided by LonWorks. The VS1PF LonWorks communication card also supports the Standard Network Variable type Variables. All network variables have input and output variables. Data communication will automatically get started when you connect the input and output variables with the Installation Tool. To connect input variables with output variables, both types of the network should be identical.

2.1.1 Technical features of LonWorks

Table 2-1

Protocol	LonTalk
LonWorks Com. Chip	FT3150-P20 chip from Echelon
LonWorks transceiver	FT-X1
Data Types	Peer-to-peer communication
LonWorks connector	Pluggable connector
Channel Type	TP/FT-10
Transfer Cable	Free Topology Twisted Pair
Baud Rate	78 kbit/s
Topology	Free Topology (Bus, Star, Loop, or compound of the previous)

Chapter 3
Installation

3.1 Installation

Caution: Before you proceed, be sure to read and become familiar with the safety precautions at the beginning of this manual. Do not proceed if you are unsure of the safety precautions described. If you have any questions, contact Baldor before you proceed. This section describes the communications adapter board installation and connection procedure.

3.2 Receiving and Inspection

1. Observe the condition of the shipping container and report any damage immediately to the commercial carrier that delivered your control. Note: The board has static sensitive components installed. Be sure to comply with ESD (Electro Static Discharge) mitigation procedures when handling the board.
2. Remove the control from the shipping container and remove all packing materials from the control. The container and packing materials may be retained for future use.
3. Verify that the part number of the control you received is the same as the part number listed on your purchase order.
4. Inspect the control for external physical damage that may have been sustained during shipment and report any damage immediately to the commercial carrier that delivered your control.
5. If the control is to be stored for several weeks before use, be sure that it is stored in a location that conforms to published storage humidity and temperature specifications stated in this manual.

3.3 Board Installation

The board has static sensitive components installed. Be sure to comply with ESD (Electro Static Discharge) procedures, such as the use of a (static discharge) wrist strap to ground, when handling any component boards.
Caution: Be sure to accomplish this work without the presence of power of any kind.

1. Remove the adapter board from the shipping container.
2. Remove all packing material from the board.
   Caution: Be sure all packing materials are removed from the board. Conductive foam may be present on the connectors to prevent static build up during shipping. This can prevent proper circuit operation.
3. Be sure drive is not in operation and is secured from inadvertent control.
4. Remove all power sources from the control.
5. Wait at least 10 minutes for internal capacitors to discharge.
6. Utilize ESD Protective measures before handling boards.
7. Refer to the VS1PF control manual MN763 and remove the enclosure cover. Open the control cover and locate mounting position (see Figure 3-1). Remove the three screws on the Main Control board and install the comm board stand-offs. Securely press downward and make good contact with the 50 pin connector in the slot position.
8. Secure the adapter board in the slot using the screws previously removed from the control board.

Figure 3-1 Adapter Board location

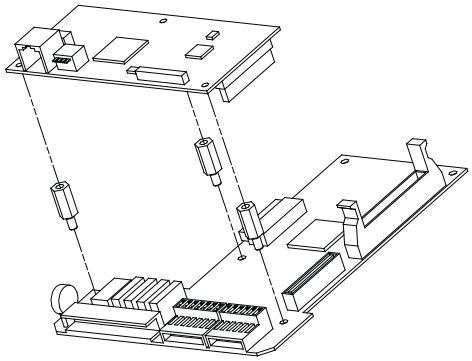

9. The mechanical installation of the adapter board is complete.

3.4 Cable Connections and Powerup

1. Connect communication cable (A,B). Connect the cable not considering polarity, for LonWorks communication cable has no polarity. If the node is located at the end of the network, use the terminal resistance selection switch to set the terminal.
2. Download an external interface file (IsisVFD.xif) and the appropriate resource file (IsisVFD.apb or IonIsisVFD.nxe) for use by your Network Tool. You can download the files from the LS homepage at: http://www.Isis.com
3. Turn on the power of inverter and verify COM-01 Opt B/D with the VS1PF keypad if it is automatically set to LonWorks or not.
4. Set the related parameters for LonWorks communication on the inverter.
5. Examine LED status of the VS1PF LonWorks communication card. SERVICE LED will blink by 0.5Hz if you didn't configure the card.
6. Wait at least 5 minutes after the VS1PF is turned off to discharge DC Link voltage. Replace VS1PF cover. Note: You must set up the configuration before you try to communicate by LonWorks communication.
7. Turn on the VS1PF again and turn the power on and off to configure the communication.

Chapter 4
Set-up and Operation

4.1 Set-Up and Connection

4.1.1 Network Connection

The VS1PF LonWorks communication card offers a pluggable connector.
This table describes the connector. The LonWorks communication cable should be connected to No. 1 and 2 of the connector. You may connect the cable without considering polarity because LonWorks communication has no polarity.

Table 4-1

Switch location		Terminal type
1	A	Network cable connection (No polarity)
2	B	
3	S	Shield connection

4.1.2 Network Termination

Set up the terminal to guarantee the reliability of communication data.

You may set up the terminal with communication cards at both ends (BUS Topology) or a communication card at one side (Free Topology).

The VS1PF LonWorks communication card contains a terminal resistance. You may determine whether you will use a terminal resistance by DIP switch in the VS1PF LONWORKS communication card. Set up one or two terminal resistances according to network topology. Free Topology uses 500Ω resistance. There is one LonWorks device that is terminated with a resistance in the network. In case of Bus Topology, it has 100Ω as a terminal resistance and two LonWorks devices.

This table describes terminal types according to the location of the switch.

Table 4-2

Switch location	Terminal type
FT	Free Topology
	50Ω terminal resistance
	Set up one terminal for LonWorks communication card of the network
NO	No use of terminal resistance
BUS	Bus Topology
	105Ω terminal resistance
	Set up two terminals for LonWorks communication card of the network

Figure 4-1 Terminal Types of Network Topologies

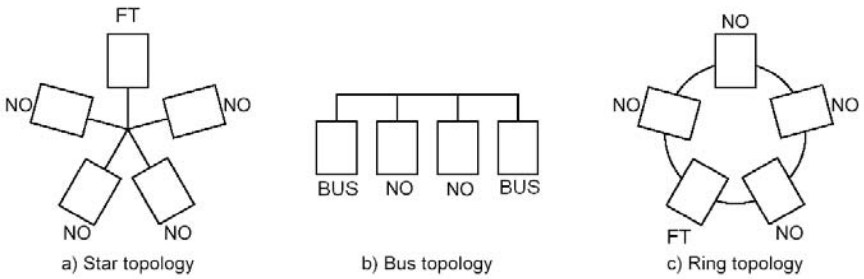

Figure 4-2 Terminal Switch Configurations of VS1PF LonWorks Communication Card

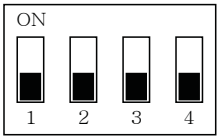

①**Terminal resistance**

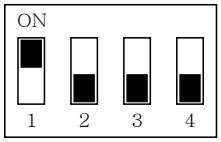

②**BUS Topology terminal (100 Ω)**

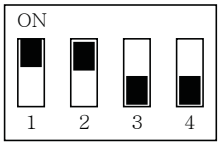

③**Free Topology terminal**

4.1.3 Suggested Network Cable

- Belden 85102, unshielded
- Belden 8471, unshielded
- Level IV 22AWG, unshielded
- JY (St) Y 2x2x0.8, shielded
- TIA568A Cat.5 24AWG

4.1.4 LED Information

There are 3 green LEDs and 1 red LED that indicate the present status of the VS1PF LonWorks Communication card and are lined up as follows on it.

Figure 4-3

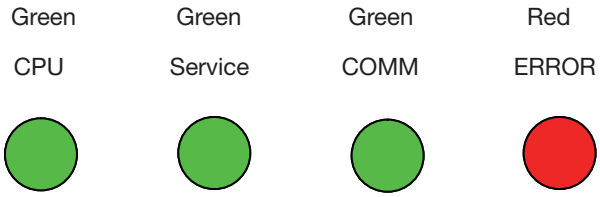

Table 4-3

LED name	Color	Status
SERVICE	Green	Off – Indicates that the VS1PF LonWorks communication card is configured.
		Blinking (0.5Hz) – Indicates that the communication card is not configured.
		On – Indicates that the VS1PF LonWorks communication card has no application and that it is not configured.
CPU, ERROR	Green, Red	CPU, ERROR blink at the same cycle – Indicates error between LonWorks communication card and VS1PF. Able to check option error message through keypad.
		CPU, ERROR blink in alternation – Indicates that there is no problem in CAN (Controller Area Network) communication.
COMM	Green	Off – Indicates that LonWorks is not communicating.
		Blinking – Indicates that it is communicating.
		When the COMM LED is blinking, “light on” means that it is transmitting and “light off” means that it is receiving data.

4.2 LonWorks Terminal Strip Connections

For Network Mode operation, the Input/Output terminal strip of the control is wired as shown in Figure 4-4. The enable inputs must be connected. For additional information, refer to the Control Installation and Operating manual, MN763.

Figure 4-4 Terminal Strip Connections

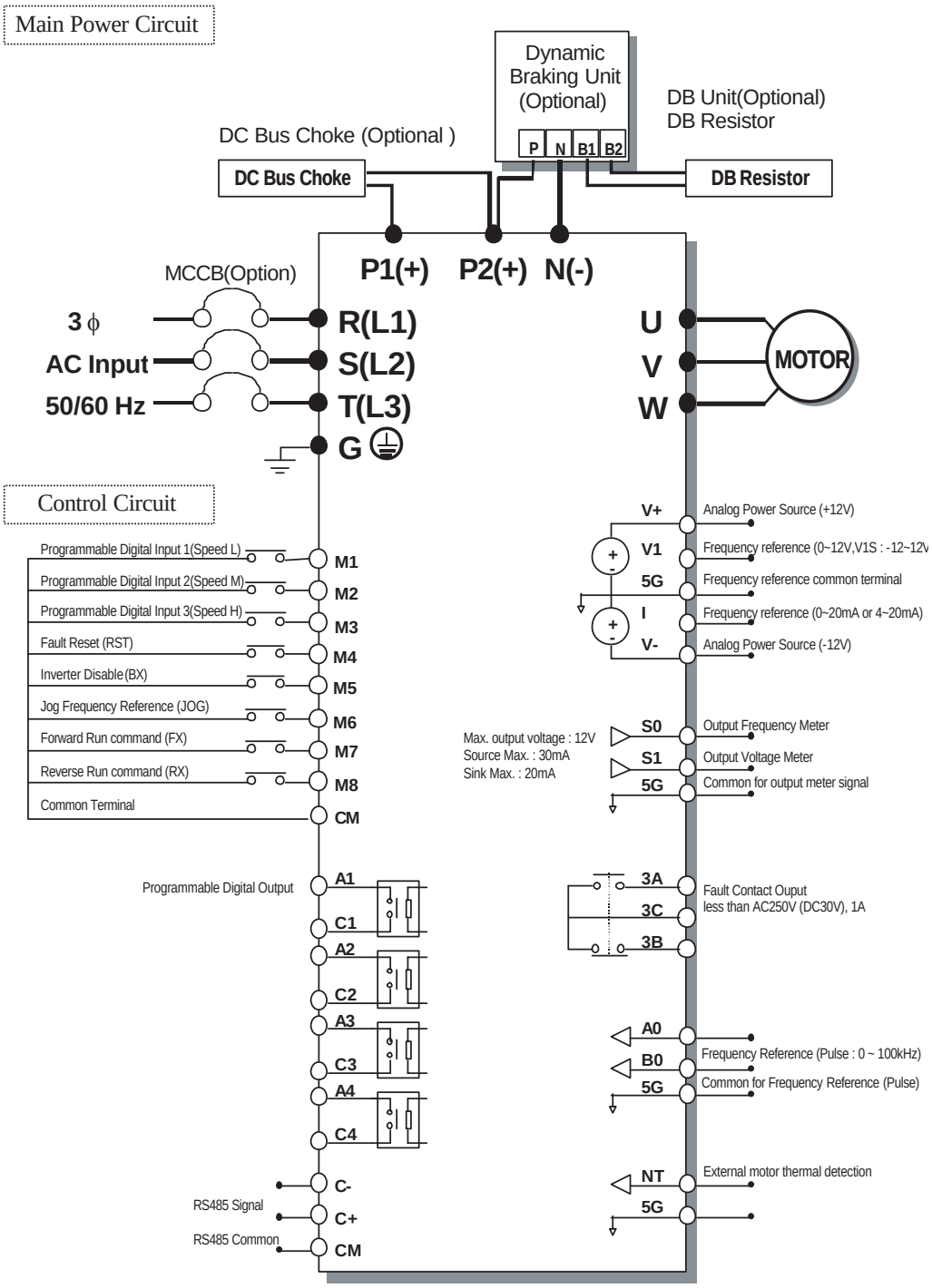

Note: 5G is Common Ground for Analog Input/Output.

Note: Use Terminal V1 for V1, VS1 (0 to 12V, -12 to 12V) input.

Chapter 5

LonWorks Connection and Configuration

5.1 LonWorks Software Connection

5.1.1 Keypad parameters of LonWorks

These are inverter parameters that display information on LonWorks.

Table 5-1 Keypad Parameters of VS1PF LonWorks

Code Number	Parameter	Details
COM-01	Opt B/D	It displays the name of the communication card that has been installed on the inverter. (It indicates 'LonWorks' when a LONWORKS communication card is installed.)
COM-03	Opt Version	It displays the version of the communication card.
COM-61	Opt Para-1	Display Neuron ID 1 (Decimal, MSB)
COM-62	Opt Para-2	Display Neuron ID 2 (Decimal)
COM-63	Opt Para-3	Display Neuron ID 3 (Decimal)
COM-64	Opt Para-4	Display Neuron ID 4 (Decimal)
COM-65	Opt Para-5	Display Neuron ID 5 (Decimal)
COM-66	Opt Para-6	Display Neuron ID 6 (Decimal)
COM-67	Comm UpDate	Update keypad parameters of communication

(1) Option Type (Option card information, COM-01)

It automatically displays the type of the communication card on VS1PF. It indicates 'LonWorks' when a LonWorks communication card is installed.

(2) Option Version (Option version information, COM-02)

It automatically displays the version of communication card on VS1PF.

(3) Neuron ID1~6 (COM61~66)

Neuron ID is a 6 bytes value which displays the Neuron ID of Neuron chip on the keypad. It is displayed by decimal numeration.

(4) Comm UpDate (COM-67)

When modifying the parameter that is related to the configuration variables of the drive object on the keypad, you have to set the Comm UpDate to "Yes," in order to write it on the communication card. Comm UpDate automatically changes to "No."

The keypad parameters to apply Comm UpDate are as shown in Table 5-2.

Table 5-2 Keypad Parameters to Apply Comm Update

Code	Code Description
BAS-10	Acc. Time
BAS-11	Dec. Time
BAS-07	Max Frequency
BAS-03	Base Frequency
FN1-32	Start Frequency
FN2-41	Pole Number

After finishing the commission to LonWorks communication card, set COM-67 Comm Update to 'Yes'. Following this process, Configuration Property can be applied with the value of the Keypad.

5.1.2 Functional Profile

Node Object

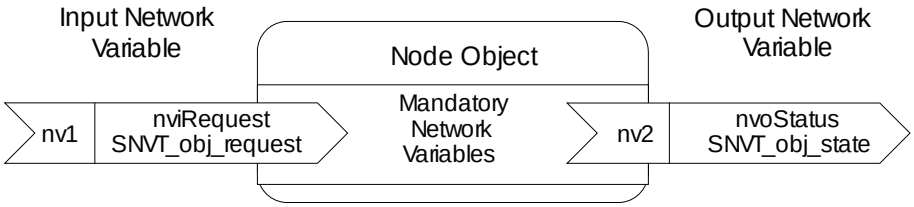

5.1.3 Network Input Variables

Table 5-3

Function	Variable	SNVT Type	Min. value	Max. value
Node Object Request	nviRequest	SNVT_obj_request	-	-

(1) nviRequest

The input, nviRequest is used to enable or update commands from network. This input supports RQ_ENABLE, RQ_DISABLE, RQ_CLEAR_ALARM, RQ_NORMAL, RQ_CLEAR_STATUS, RQ_UPDATE_STATUS and RQ_REPORT_MASK.

5.1.4 Network Output Variables

Table 5-4

Function	Variable	SNVT Type	Min. value	Max. value
Node Object Status	nvoStatus	SNVT_obj_status	-	-

(1) nvoStatus

This nvoStatus reports node object status.

Table 5-5

Invalid ID	Invalid node ID requested
Report mask	Reporting supported fields
Disabled	If RQ_DISABLE active
Electrical_fault	Drive is faulted
Manual_control	Drive is in local control
In_alarm	Drive has an alarm

5.2 Drive Object

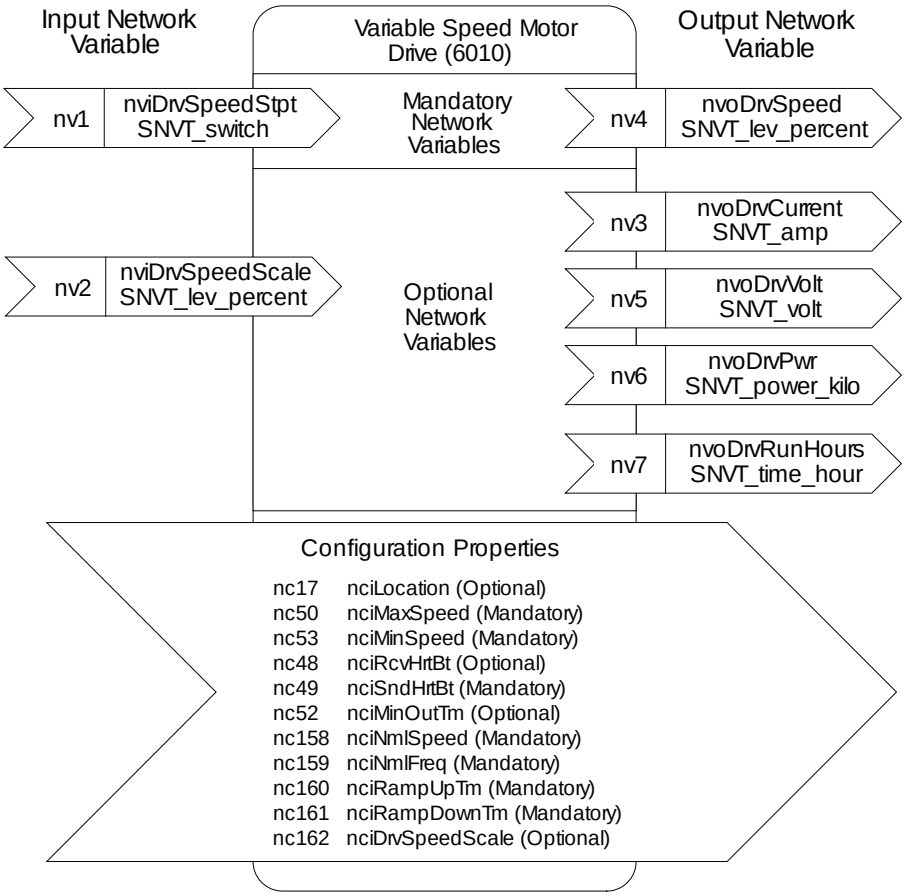

5.2.1 Network Input Variables

Table 5-6

Function	Variable	SNVT Type	Min. value	Max. value
Drive Speed Setpoint	nviDrivSpeedStpt	SNVT_switch	n/a	n/a
Drive Speed Setpoint Scaling	nviDrvSpeedScale	SNVT_lev_percent	163.840%	163.840%

1) nviDrvSpeedStpt

(2) nviDrvSpeedScale

Definition

Network input SNVT_switch nviDrivSpeedStpt

Network input SNVT_lev_percent nviDrvSpeedScale

Description

NviDrvSpeedStpt and nviDrvSpeedScale are used for the inverter run and speed command.

The state variable of nviDrvSpeedStpt is a value that decides the command to whether run or stop the inverter.

If the state of nviDrvSpeedStpt is 0, the inverter will stop and the inverter will run when the state value is 1.

nviDrvSpeedScale offers information of the operative direction. If a value of the nviDrvSpeedScale is positive, the motor runs clockwise and if the nviDrvSpeedScale is negative, the motor runs counterclockwise.

Frequency command consists of a combination of nviDrvSpeedScale and nviDrvSpeedStpt. The value of both nviDrvSpeedScale and nviDrvSpeedStpt are in % units and the multiplied value of the two is the input for the frequency command of Base Freq. nviDrvSpeedScale provides the scale information of nviDrvSpeedStpt value. For example, if nviDrvSpeedStpt is 100% and nviDrvSpeedScale is -80%, the actual speed is -80% (1 X 0.8 = 0.8). Therefore, the inverter runs counterclockwise at a speed of the base frequency times 0.8. So, if the base frequency is 60.00 Hz, the frequency command value would be 48Hz (60.00Hz X 0.8).

The input range for nviDrvSpeedScale is -163.840% ~ 163.830%. Therefore, if a value of 0x7fff(+163.835%) is put in, this value would be a invalid data.

State and Value information of NviDrvSpeedStpt

Table 5-7

State	Value	Run frequency / status of inverter
0	-	Stop
1	0	0% frequency operation of the base frequency
1	0.5~100.0	0.5~100.0% frequency operation of the base frequency
1	100.0	100.0% frequency operation of the base frequency
0xFF	-	Auto

When you want to run or set the frequency command with LonWorks, you should set up the COM-02 Opt mode of the COM group to “Cmd + Freq” by using the keypad. Set the COM-02 Opt mode to “Command” to operate the run command only with LonWorks and “Freq” is for the use of the frequency command.

Table 5-8

Code Number/ Common area address	Code Description	Default	Setting range
COM-02	Opt mode	None	None
			Command
			Freq
			Cmd + Freq

nviDrvSpeedScale Range -163.840% ~ 163.830%

nviDrvSpeedScale Default 0.000%

Inverter parameters of NviDrvSpeedStpt, nviDrvSpeedScale

Table 5-9

Code Number/ Common area address	Code Description	Default	Setting range
0x0004	Frequency Command	0.00 Hz	0.00 ~ 120.00
0x0005	Run Command	Refer to the description of common area	
BAS-03	Base Frequency	60.00 Hz	30.00~120.00

Note: On network input variables, nviDrivSpeedStpt and nviDrvSpeedScale, you may use Lost Command by using the nciRcvHrtBt variable.

5.2.2 Network Output Variables

Table 5-10

Function	Variable	SNVT Type	Min. value	Max. value
Drive Speed Feedback	nvoDrvSpeed	SNVT_lev_percent	163.840%	163.840%
Actual Motor Current	nvoDrvCurnt	SNVT_amp	0.0A	3276.7A
Drive Output Voltage	nvoDrvVolt	SNVT_volt	0.0V	3276.7V
Actual Drive Power	nvoDrvPwr	SNVT_power_kilo	0.0kW	6553.5kW
Drive total running hours	nvoDrvRunHours	SNVT_time_hour	0h	65535h

(1) nvoDrvSpeed

Definition

Network output SNVT_lev_percent nvoDrvSpeed

Description

nvoDrvSpeed outputs the inverter's current run speed by the percentage value of the base frequency. When the inverter runs clockwise (counterclockwise), the value of the nvoDrvSpeed gets a positive (negative) value. For example, if the base frequency is 60.00Hz and the inverter is running counterclockwise with 30.00Hz, novDrvSpeed outputs the value of -50.00%.

Typical Range -163.840 ~ 163.830 % (0.001 %)

Table 5-11

Code Number/Common area address	Code Description	Default	Setting range
0x0009	Output Frequency	-	
0x000D	Status of Inverter (FWD, REV)		
BAS-03	Base Frequency	60.00 Hz	30.00~120.00

(2) nvoDrvCurnt

Definition

Network output SNVT_amp nvoDrvCurnt

Description

nvoDrvCurnt displays the output current value of the inverter by the unit of the A.

Typical Range 0.0 ~ 3276.6 A (0.1 A)

Inverter parameters for nvoDrvCurnt

Table 5-12

Code Number/Common area address	Code Description
DRV-08	Current
0x0008	

(3) nvoDrvVolt

Definition

Network output SNVT_volt nvoDrvVolt

Description

nvoDrvVolt displays the output voltage value of the inverter by the unit of V.

Typical Range 0.0 ~ 700.0 V (0.1 V)

Inverter parameters for nvoDrvVoltCurnt

Table 5-13

Code Number/Common area address	Code Description
0x000A	Output voltage

(4) nvoDrvPwr

Definition

Network output SNVT_power_kilo nvoDrvPwr

Description

nvoDrvPwr, the value of a network output variable, displays the output power of the inverter by the unit of kW.

Typical Range 0.0 ~ 6553.4 kW (0.1 kW)

Inverter parameters for nvoDrvPwr

Table 5-14

Code Number/Common area address	Code Description
MAK-01	Capacity of the inverter
0x0000	

(5) nvoDrvRunHours

Definition

Network output SNVT_time_hour nvoDrvRunHours

Description

It displays the whole operation time of the inverter.

Inverter parameters for nvoDrvPwr

Table 5-15

Code Number/Common area address	Code Description
FN2-85	Run time

5.2.3 Network Configuration Variable

Table 5-16

Function	Variable	Optional/ Mandatory	SNVT Type
Location Label	nciLocation	Optional	SCPTlocation
Maximum Motor Speed	nciMaxSpeed	Mandatory	SCPTmaxSetpoint
Minimum Motor Speed	nciMinSpeed	Mandatory	SCPTminSetpoint
Receive Heartbeat Time	nciRcvHrtBt	Optional	SCPTmaxRcvTime
Send Heartbeat Time	nciSndHrtBt	Mandatory	SCPTmaxSndTime
Minimum Send Time	nciMinOutTm	Optional	SCPTMinOutTime
Nominal Motor Speed in RPM	nciNmlSpeed	Mandatory	SCPTnomRPM
Nominal Motor Frequency	nciNmlFreq	Mandatory	SCPTnomFreq
Minimum Ramp Up Time	nciRampUpTm	Mandatory	SCPTrampUPTm
Minimum Ramp Down Time	nciRampDownTm	Mandatory	SCPTrampDownTm
DefaultValuefor nviDrvSpeedScale	nciDrvSpeedScale	Optional	SCPTdefScale

Note: When you modify the parameter that is related to the configuration variable and set Comm UpDate parameter to 'Yes', the modified value gets written to the configuration variable.

Table 5-17

Code Number/Common area address	Code Description	Default	Setting range
COM-67	Comm UpDate	No	No
			Yes

(1) Location Label (Optional)

Definition

Network config input SNVT_str_asc nciLocation

Description

nciLocation uses 6bytes Location string of Neuron Chip and saves the information of the physical location into nciLocation.

Default Empty spaces

(2) Maximum Motor Speed (Mandatory)

Definition

Network config input SNVT_lev_percent nciMaxSpeed

Description

nciMaxSpeed is the value to set the max speed of the motor. nciMaxSpeed is inputted by the percentage of the nominal frequency (nciNmlFreq) configuration value. For example, if nciNmlFreq is 60.0Hz and nciMaxSpeed is 120%, the maximum frequency will be 72.0Hz (60.0 X 1.2). The value, 72.0Hz, is written in the BAS-07 Max Freq and it will be shown on the keypad.

nciMaxSpeed value cannot be modified while the inverter runs. You must stop the inverter first and then you can modify the nciMaxSpeed value.

The initial value of the nciMaxSpeed is the percentage value of the BAS-07 Max Freq, which compares to the BAS-03 Base Freq. Therefore, the initial value of the nciMaxSpeed will be 100.00%.

nciMaxSpeed must satisfy the formula below.

$$-163.840 \leq Minimum\ \ Speed \leq Maximum\ \ Speed \leq 163.840$$

Typical Range 0.000 ~ 40.000 % (0.001 %)
Default 0.000%

As shown above, BAS-07 Max Freq is changed by nciMaxSpeed(%) of nciMinFreq(nciMinSpeed). Since 40~120.00Hz is the setting range for Max Freq, original setting value of Max Freq is preserved when nciNmlFreq has to change below 40Hz (ex. nciNmlFreq 30Hz, nciMaxSpeed 100.00%).

Inverter parameters for nciMaxSpeed

Table 5-18

Code Number/Common area address	Code Description	Default	Setting range
BAS-03	Base Frequency	60.00 Hz	30.00 ~ 400.00
BAS-07	Max Frequency	60.00 Hz	30.00 ~ 400.00

When you input the BAS-07 Max Freq value and set Comm Update as 'Yes' to apply the nciMaxSpeed value and if the BAS-07 Max Freq is more than 160% of the BAS-03 Base Freq, BAS-07 Max Freq value is changed to 100% of the Base Freq. For example, if the Base Freq is 60.00 Hz, the Max Freq is 120.00 Hz, and Comm Update is 'Yes', then the Max Freq will be automatically changed to 60.00 Hz.

(3) Minimum Motor Speed (Mandatory)

Definition

Network config input SNVT_lev_percent nciMinSpeed

Description

nciMinSpeed is the value to set the min speed of the motor. nciMinSpeed is inputted by the percentage of the nominal frequency (nciNmlFreq) configuration value. For example, if nciNmlFreq is 60.0Hz and nciMinSpeed is 10%, the maximum frequency will be 6.0Hz (60.0 X 0.1). The value, 6.00Hz, is written in the FN1-32 Start Freq and it will be shown on the keypad.

nciMinSpeed value is not able to be modified while the inverter runs. You must stop the inverter first and then modify the nciMinSpeed value.

The initial value of the nciMinSpeed is the percentage value of the FN1-32 Start Freq, which compares to the BAS-03 Base Freq. Therefore, the initial value of the nciMaxSpeed will be 0.8%.

nciMInSpeed must satisfy the formula below.

$$-163.840 \leq Minimum\ \ Speed \leq Maximum\ \ Speed \leq 163.840$$

Typical Range 0.000 ~ 40.000 % (0.001 %)
Default 0.000%

As shown above, BAS-07 Max Freq is changed by nciMaxSpeed(%) of nciMinFreq(nciMinSpeed). Since 40~120.00Hz is the setting range for Max Freq, original setting value of Max Freq is preserved when nciNmlFreq has to change below 40Hz (ex. nciNmlFreq 30Hz, nciMaxSpeed 100.00%).

Inverter parameters for nciMaxSpeed

Table 5-19

Code Number/Common area address	Code Description	Default	Setting range
BAS-03	Base Frequency	60.00 Hz	30.00 ~ 120.00
FN1-32	Start Frequency	0.50 Hz	0.01 ~ 10.00

(4) Receive Heart Beat Time (Optional)

Definition

Network config input SNVT_time_sec nciRcvHrtBt

Description

Decide the maximum update cycle time of the network input variables, nviDrvSpeedStpt and nviDrvSpdScale. If Update of nviDrvSpeedStpt and nviDrvSpdScale does not occur during the nciRcvHrBt time, it recognizes it as a condition of the communication command loss and starts to run as the mode in the communication command loss of IO-93.

If you want to run with the mode which is set in the communication command loss, you have to set the COM-02 Opt mode as a value, not “None.” Furthermore, the IO-92 Lost Cmd mode has to be set as a value also.

Typical Range 0.0 ~ 120.0 sec (0.1 sec)
Invalid Data, when input value is 0xFFFF(6553.5 sec)
Default 0.0 sec (not using Receive Heart Beat function)

Inverter parameters for nciRcvHrtBt

Table 5-20

Code Number/Common area address	Code Description	Default	Setting range
IO-92	COM Lost Cmd	None	None
			FreeRun
			Stop
COM-02	Opt mode	None	None
			Cmd
			Freq
			Cmd+Freq

Caution: When communicating with LONWORKS, communication loss time of the inverter, IO-93 COM Time Out value, does not get applied.

(5) Send Heart Beat Time(Mandatory)

Definition

Network config input SNVT_time_sec nciSndHrtBt

Description

It determines the maximum output time of the network output variables, such as nvoDrvSpeed, nvoDrvCurnt, nvoDrvVolt, nvoDrvPwr, and nvoDrvRunHours.

Typical Range 0.0 ~ 6553.4 sec
Invalid Data, when input value is 0xFFFF(6553.5 sec)
Default 0.0 sec (not using Send Heart Beat function)

(6) Minimum Out Time (Optional)

Definition

Network config input SNVT_time_sec nciMinOUtTm

Description

Decides the minimum time that network variables, such as nvoDrvSpeed, nvoDrvCurnt, nvoDrvVolt, nvoDrvPwr, and nvoDrvRunHours have to wait until they get sent through communication.

The network value does not change by every little variation but it sends out the changed value every nciMinOutTm time. It is used to reduce network traffic.

Typical Range 0.0 ~ 6553.4 sec (0.1 sec)
Invalid Data, when input value is 0xFFFF(6553.5 sec)
Default 0.0 sec (not using Minimum Out Time function)

(7) Nominal Motor Speed in RPM (Mandatory)

Definition

Network config input SNVT_freq_hz nciNmlSpeed

Description

nciNmlSpeed sets up the Base Freq of inverter.

The initial value of nciNmlSpeed will become 1800.00 rpm because it is converted from BAS-03 Base Freq into rpm (Base on 60Hz of the Base Freq and 4 Pole Number). When the nciNmlSpeed value is modified, the value of nciNmlSpeed, which is converted from rpm into Hz is reflected in BAS-03 Base Freq.

Below is the formula to convert RPM into Hz. The inverter parameter, FN2-41 is the number of motor poles. You should set it properly.

$$\text{The number of rotation per minute} = \frac{\text{Base Frequency(Hz)} \times 120}{\text{the number of motor poles}}$$

Valid Range 0 ~ 65534 rpm (1 rpm)
Default 1800 rpm

Inverter parameters for nciNmlSpeed

Table 5-21

Code Number/Common area address	Code Description	Default	Setting range
FN2-41	Pole Number	4	2~48
0X001A			
BAS-03	Base Frequency	60.00 Hz	30.00 ~ 120.00

Caution

nciNmlFreq is automatically changed when you modify nciNmlSpeed. For example, when nciNmlSpeed is 1800rpm, nciNmlFreq is 60.0Hz, BAS-03 Base Frequency of Keypad parameter is 60.00Hz, and FN2-41 Pole Number is 4, and if you change nciNmlFreq to 1700rpm, then nciNmlFreq will be 56.7Hz (BAS-03 Base Frequency is rounded up) and BAS-03 Base Frequency of Keypad parameter will be 56.66Hz.

FNI-32 Start Frequency and BAS-07 Max Frequency will be changed together when you modify nciNmlSpeed and nciNmlFreq. Referring to the above example, if nciMaxSpeed is 100.000% and nciMinSpeend is 10.000%, FNI-32 Start Frequency will become 5.66Hz and BAS-07 Max Frequency will be 56.66Hz.

(8) Nominal Motor Frequency (Mandatory)

Definition

Network config input SNVT_freq_hz nciNmlFreq

Description

nciNmlFreq sets up the Base Freq of inverter. The nciNmlFreq is a indispensable value to set the minimum(nciMinSpeed) and maximum(nciMaxSpeed) frequency of the motor. nciMinSpeed and nciMaxSpeed are percentage values of the nciNmlFreq. The initial value of nciNmlFreq is 60.0Hz, which is same as BAS-03 Base Freq.

Valid Range 30.0 ~ 400.0 (0.1 Hz)
Default 60.0 Hz

Inverter parameters for nciNmlFreq

Table 5-22

Code Number/Common area address	Code Description	Default	Setting range
BAS-03	Base Frequency	60.00 Hz	30.00 ~ 120.00

(9) Minimum Ramp Up Time (Mandatory)

Definition

Network config input SNVT_time_sec nciRampUpTm

Description

nciRampUpTm sets up the acceleration time. BAS-10 Acc. Time value will be changed into nciRampUpTm when nciRampUpTm is modified. The initial value of the nciRampUpTm is same as BAS-10 ACC. Time. Therefore, the initial value is 20.0 sec.

Valid Range 0.0 ~ 600.0 sec (0.1 sec)
Default 20.0 sec

Inverter parameters for nciRampUpTm

Table 5-23

Code Number/Common area address	Code Description	Default	Setting range
0x0006/BAS-10	Acc. Time	20.0 sec	0.0 ~ 600.0

(10) Minimum Ramp Down Time (Mandatory)

Definition

Network config input SNVT_time_sec nciRampDownTm

Description

nciRampDownTm sets up the deceleration time. BAS-11 Dec. Time value will be changed into nciRampDownTm when nciRampDownTm is modified.

The initial value of nciRampDownTm is same as BAS-11 Dec.Time. Therefore, the initial value is 30.0 sec.

Valid Range 0.0 ~ 600.0 sec (0.1 sec)
Default 30.0 sec

Inverter parameters for nciRampDownTm

Table 5-24

Code Number/Common area address	Code Description	Default	Setting range
0x0007	Dec. Time	30.0 sec	0.0 ~ 600.0
BAS-11			

(11) Default for nviDrvSpeedScale (Optional)

Definition

Network config input SNVT_lev_percent nciDrvSpeedScale

Description

nciDrvSpeedScale is applied to the initial value of the network output variable, nviDrvSpeedScale.

Valid Range -163.840 ~ 163.830 (0.005 %)
Default 0.000 %

Note: BAS-03 Base Freq, BAS-07 Max Freq, FN1-32 Start Freq, FN2-41 Pole Num, BAS-10 Acc Time, and BAS-11 Dec Time are keypad parameters that are closely related to the configuration property variables of drive object, such as nciNmlFreq, nciNmlSpeed, nciMaxSpeed, nciMinSpeed, nciRampUPTm, and nciRampDownTm.

To modify BAS-03 Base Freq, BAS-07 Max Freq, FN1-32 Start Freq, FN2-41 Pole Num, BAS-10 Acc Time, and BAS-11 Dec Time and save them into the configuration property variables, such as nciNmlFreq, nciNmlSpeed, nciMaxSpeed, nciMinSpeed, nciRampUPTm, and nciRampDownTm, turn off the inverter and turn it on again.

For example, if you change the keypad parameters as the table below, nciMaxSpeed is 120.000%, nciMinSpeed is 20.000%, nciNmlSpeed is 15000 rpm, nciNmlFreq is 50.0 Hz, nciRampUpTm is 19.0 sec, and nciRampDownTm is 29.0 sec.

Table 5-25

Code	Parameter	Value	Code	Parameter	Value
BAS-10	Acc. Time	19.0 sec	BAS-11	Dec. Time	29.0 sec
BAS-07	Max Freq	60.00 Hz	BAS-03	Base Freq	49.99 Hz
FN1-32	Start Freq	10.00 Hz	FN2-41	Pole Num	4

1. nciNmlFreq is down to the first decimal place and BAS-03 Base Freq is down to the second decimal place. Therefore, the nciNmlFreq is 45.7Hz, because it rounds off at the second decimal place of BAS-03.

2. $$\text{nciNmlSpeed} = \frac{\text{BaseFreq} \times 120}{\text{the number of motor ploes}} = \frac{45.68 \times 120}{4} = 1370rpm(1370.4)$$

3. $$\text{nciMaxSpeed} = \frac{\text{MaxFreq}}{\text{BaseFreq}} \times 100(\%) = \frac{68.52}{45.68} \times 100(\%) = 150.000\%$$

4. $$\text{nciMinSpeed} = \frac{\text{StartFreq}}{\text{BaseFreq}} \times 100(\%) = \frac{3.91}{45.68} \times 100(\%) = 8.555\%(8.559544...)$$

All the Base Freq used in the calculation uses nciNmlFreq to calculate.

The Max Freq value should not exceed 163.840% of the Base Freq. The maximum value of nciMaxSpeed is 163.840%.

5.3 User Object (User Function Profile Type)

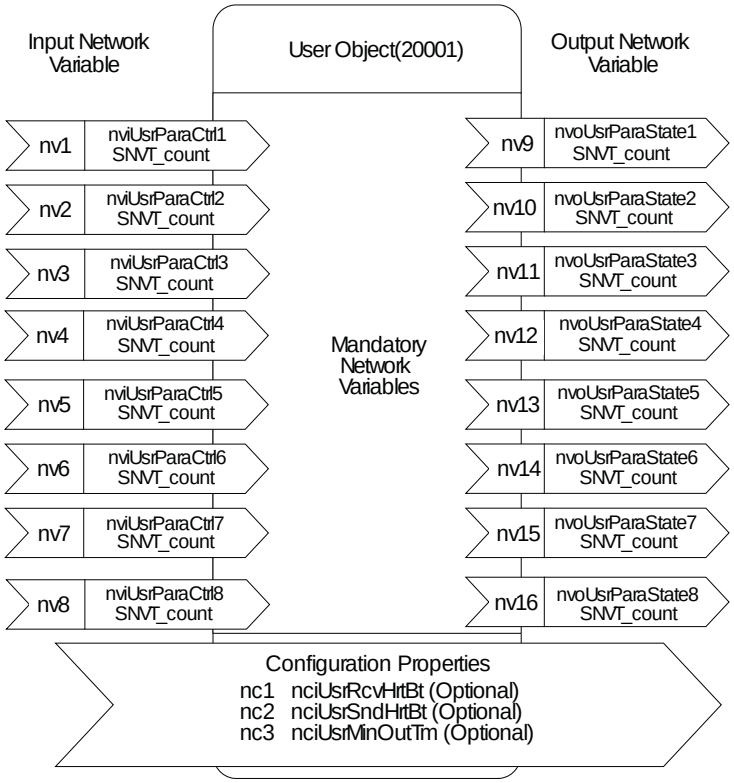

5.3.1 Network Input Variables

Table 5-26

Function	Variable	SNVT Type	Min. value	Max. value
User Parameter Control1	nviUsrParaCtrl1	SNVT_count	0	65535
User Parameter Control2	nviUsrParaCtrl2	SNVT_count	0	65535
User Parameter Control3	nviUsrParaCtrl3	SNVT_count	0	65535
User Parameter Control4	nviUsrParaCtrl4	SNVT_count	0	65535
User Parameter Control5	nviUsrParaCtrl5	SNVT_count	0	65535
User Parameter Control6	nviUsrParaCtrl6	SNVT_count	0	65535
User Parameter Control7	nviUsrParaCtrl7	SNVT_count	0	65535
User Parameter Control8	nviUsrParaCtrl8	SNVT_count	0	65535

(1) nviUsrParaCtrl1 ~ nviUsrParaCtrl8

Definition

Network input SNVT_count nviUsrParaCtrl1 (identical until nviUsrParaCtrl8)

Description

nvoUsrParaCtrl1 ~ nvoUsrParaCtrl8 are added network output variables to provide the PF inverter user with more flexible functions.

The strength of this function is the ability for the user to change the inverter parameter that the user actually wants to change and not the fixed parameter value of the inverter.

When the user puts in the address in parameter COM41~COM48 using the keypad, it corresponds one to one to the network variables, nviUsrParaCtrl1 ~ nviUsrParaCtrl8 and could change the set up parameter value.

For example, if the user sets COM41 as 0x0005 (Freq. setting), COM42 as 0x0006 (Operation command setting) and COM43 as 0x0007 (Accelerating time), the user could set the Frequency through nviUsrParaCtrl1, set the Operation command through nviUsrParaCtrl2 and change the Accelerating speed through nviUsrParaCtrl3. If you want to make the inverter run counterclockwise at a speed of 60.00Hz with an accelerating time of 10.0 sec., put in 6000 for nviUsrParaCtrl1, 4 for nviUsrParaCtrl2 and 100 for nviUsrParaCtrl3.

Inverter parameters for nviUsrParaCtrl1 ~ nviUsrParaCtrl7

Table 5-27

Code Number/Common area address	Code Description	Default	Setting range
COM-40	User Parameter Control Number	8	0~8
COM-41	User Parameter Control 1	0x0005	0~0xFFFF
COM-42	User Parameter Control 2	0x0006	0~0xFFFF
COM-43	User Parameter Control 3	0x0000	0~0xFFFF
COM-44	User Parameter Control 4	0x0000	0~0xFFFF
COM-45	User Parameter Control 5	0x0000	0~0xFFFF
COM-46	User Parameter Control 6	0x0000	0~0xFFFF
COM-47	User Parameter Control 7	0x0000	0~0xFFFF
COM-48	User Parameter Control 8	0x0000	0~0xFFFF

Note: When communicating with LonWorks, the COM-40 User Parameter Control Number gets fixed to 8. Even if you change the value of COM-40 on the keypad, 8 will automatically reappear.

5.3.2 Network Output Variables

Table 5-28

Function	Variable	SNVT Type	Min. value	Max. value
User Parameter State1	NvoUsrParaState1	SNVT_count	0	65535
User Parameter State2	nvoUsrParaState2	SNVT_count	0	65535
User Parameter State3	nvoUsrParaState3	SNVT_count	0	65535
User Parameter State4	nvoUsrParaState4	SNVT_count	0	65535
User Parameter State5	nvoUsrParaState5	SNVT_count	0	65535
User Parameter State6	nvoUsrParaState6	SNVT_count	0	65535
User Parameter State7	nvoUsrParaState7	SNVT_count	0	65535
User Parameter State8	nvoUsrParaState8	SNVT_count	0	65535

(1) nviUsrParaState1 ~ nviUsrParaState8

Definition

Network output SNVT_count NvoUsrParaState1 (identical until nvoUsrParaState8)

Description

nvoUsrParaState1 ~ nvoUsrParaState8 are added network output variables to provide the PF inverter user with more flexible functions.

The strength of this function is the ability for the user to change the inverter parameter that the user actually wants to monitor and monitor the value of it. Not the fixed parameter value of the inverter.

When the user puts in the address in parameter COM31~COM38 using the keypad, it corresponds one to one to the network variables, nvoUsrParaState1 ~ nvoUsrParaState8 and the inverter's parameter value gets displayed.
3000, nviUsrParaState2, 1500 and nviUsrParaState3, 2000.

For example, if the user sets COM31 as 0x000A (Output Freq.), COM32 as 0x000B (Inverter Output Voltage) and COM33 as 0x941E (Jog Freq.), the variable nvoUsrParaState1 will display the Output Freq. value, nvoUsrParaState2 will display the Inverter Output Voltage value and nvoUsrParaState3 will display the Jog Freq. value. If the inverter runs at a speed of 30.00Hz, the DC link voltage is 150.0V and if the Jog Freq. is set to 20.00, then would be the value for nviUsrParaState1, 3000, nviUsrParaState2, 1500 and nviUsrParaState3, 2000.

Inverter parameters for nviUsrParaState0 ~ nviUsrParaState7

Table 5-29

Code Number/Common area address	Code Description	Default	Setting range
COM-30	User Parameter State Number	8	0~8
COM-31	User Parameter State 1	0x000A	0~0xFFFF
COM-32	User Parameter State 2	0x000E	0~0xFFFF
COM-33	User Parameter State 3	0x000F	0~0xFFFF
COM-34	User Parameter State 4	0x0000	0~0xFFFF
COM-35	User Parameter State 5	0x0000	0~0xFFFF
COM-36	User Parameter State 6	0x0000	0~0xFFFF
COM-37	User Parameter State 7	0x0000	0~0xFFFF
COM-38	User Parameter State 8	0x0000	0~0xFFFF

Note: When communicating with LonWorks, the COM-30 User Parameter State Number gets fixed to 8. Even if you change the value of COM-30 on the keypad, 8 will automatically reappear.

5.3.3 Network Configuration Variable

Table 5-30

Function	Variable	Optional/Mandatory	SNVT Type
Receive Heartbeat Time for User Object	NciUsrRcvHrtBt	Optional	SCPTmaxRcvTime
Send Heartbeat Time for User Object	nciUsrSndHrtBt	Optional	SCPTmaxSndTime
Minimum Send Time for User Object	nciUsrMinOutTm	Optional	SCPTMinOutTime

(1) Receive Heart Beat Time for User Object (Mandatory)

Definition

Network config input SNVT_time_sec nciUsrRcvHrtBt

Description

Decides the maximum update cycle time of the User Object's network input variables, nviUsrParaCtrl1 ~ nviUsrParaCtrl8. If Update of nviUsrParaCtrl1 and nviUsrParaCtrl8 does not occur during the nciUsrRcvHrtBt time, it recognizes it as a communication command loss and starts to run as the mode set in COM Lost Cmd of IO-93.

If you want to use the communication command loss, you have to set the COM-02 Opt mode as a value, not "None." Furthermore, the IO-92 COM Lost Cmd mode has to be set as a value also.

Typical Range 0.0 ~ 120.0 sec (0.1 sec)
Invalid Data, when input value is 0xFFFF(6553.5 sec)
Default 0.0 sec (not using Receive Heart Beat function)

Inverter parameters for nciRcvHrtBt

Table 5-31

Code Number/Common area address	Code Description	Default	Setting range
IO-92	COM Lost Cmd	None	None
			FreeRun
			Stop
COM-02	Opt mode	None	None
			Cmd
			Freq
			Cmd+Freq

Note: When communicating with LONWORKS, communication loss time of the inverter, IO-93 COM Time Out value, does not get applied.

(2) Send Heart Beat Time for User Object (Mandatory)

Definition

Network config input SNVT_time_sec nciUsrSndHrtBt

Description

It decides max. output time of the User Object network output variable, nvoUsrParaState1 ~ nvoUsrParaState8.

Typical Range 0.0 ~ 6553.4 sec
Value input, 0xFFFF (6553.5 sec) is invalid data.
Default 0.0 sec (It does not use the Send Heart Beat function)

(3) Minimum Out Time for User Object (Mandatory)

Definition

Network config input SNVT_time_sec nciUsrMinOUtTm

Description

It decides the min. time that the User Object network variable, nvoUsrParaState1 ~ nvoUsrParaState8 has to wait until it gets sent through communication.

The network value does not change by every little variation but it sends out the changed value every nciMinOutTm time. It is used to reduce network traffic.

Typical Range 0.0 ~ 6553.4 sec (0.1 sec)
Value input, 0xFFFF (6553.5 sec) is invalid data.
Default 0.0 sec (It does not use the Minimum Out Time function

Appendix A
Technical Specifications

Abbreviations

AI	Analog Input
AO	Analog Output
AOC	Application Orientated Controller
BI	Binary Input
BO	Binary Output
BMS	Building Management System
BPU	Bypass Unit
CAN	Controller Area Network
CMD	Command
COS	Change of State
EEPROM	Electrical Erasable Programmable Read Only Memory
EIA	Electronics Industries Alliance: Specifiers of the EIA Standard RS 485-A
EMC	Electromagnetic Compatibility
FW	Firmware
GND	Ground
HF	High Frequency
HVAC	Heating Ventilation Air Conditioning
ID	Identification
I/O	Input/Output
ISO	International Standards Organization
LCD	Liquid Crystal Display
LCP	Local Control Panel
LED	Light Emitting Diode
LON	LonWorks Communications Protocol
MAC	Media Access Controller
MSTP	Master Slave Token Passing
N	Negative
NCM	Network Control Module
NEC	National Electrical Code
OPT	Option
OWS	Operator Workstation
P	Positive
PAC	Process Automation Controller
PC	Personal Computer
PCA	Parameter Characteristics
PCV	Parameter-Characteristics- Value
PDU	Protocol Data Unit
PLC	Programmable Logic Controller
PVA	Parameter Value
RC	Request/Response Characteristics
Rxd	Receive Data
S	Shield
SW	Software
Txd	Transmit Data
VAV	Variable Air Volume

Appendix B
Code Examples

Modbus/MBTCP

Table B-1

HZ Speed Reference	Decimal Speed Reference	Binary High	Binary Low	HEX as seen Reference	HEX as should be Reference
10.00	1000	0000 0011 03	1110 1000 E8	3E8	03E8
20.00	2000	0000 0111 07	1101 0000 D0	7D0	07D0
30.00	3000	0000 1011 0B	1011 1000 B8	BB8	0BB8
40.00	4000	0000 1111 0F	1010 0000 90	F90	0F90
50.00	5000	0001 0011 13	1000 1000 88	1388	1388
60.00	6000	0001 0111 17	0111 0000 70	1770	1770

Baldor District Offices

UNITED STATES

ARIZONA
PHOENIX
4211 S 43RD PLACE
PHOENIX, AZ 85040
PHONE: 602-470-0407
FAX: 602-470-0464

ARKANSAS
CLARKSVILLE
1001 COLLEGE AVE.
CLARKSVILLE, AR 72830
PHONE: 479-754-9108
FAX: 479-754-9205

CALIFORNIA
LOS ANGELES
6480 FLOTILLA
COMMERCE, CA 90040
PHONE: 323-724-6771
FAX: 323-721-5859

HAYWARD
21056 FORBES STREET
HAYWARD, CA 94545
PHONE: 510-785-9900
FAX: 510-785-9910

COLORADO
DENVER
3855 FOREST STREET
DENVER, CO 80207
PHONE: 303-623-0127
FAX: 303-595-3772

CONNECTICUT
WALLINGFORD
65 SOUTH TURNPIKE ROAD
WALLINGFORD, CT 06492
PHONE: 203-269-1354
FAX: 203-269-5485

FLORIDA
TAMPA/PUERTO RICO/
VIRGIN ISLANDS
3906 EAST 11TH AVENUE
TAMPA, FL 33605
PHONE: 813-248-5078
FAX: 813-247-2984

GEORGIA
ATLANTA
62 TECHNOLOGY DR.
ALPHARETTA, GA 30005
PHONE: 770-772-7000
FAX: 770-772-7200

ILLINOIS
CHICAGO
4 SAMMONS COURT
BOLINGBROOK, IL 60440
PHONE: 630-296-1400
FAX: 630-226-9420

INDIANA
INDIANAPOLIS
5525 W. MINNESOTA STREET
INDIANAPOLIS, IN 46241
PHONE: 317-246-5100
FAX: 317-246-5110

IOWA
DES MOINES
1800 DIXON STREET, SUITE C
DES MOINES, IA 50316
PHONE: 515-263-6929
FAX: 515-263-6515

MARYLAND
BALTIMORE
6660 SANTA BARBARA RD.
SUITE 22-24
ELKRIDGE, MD 21075
PHONE: 410-579-2135
FAX: 410-579-2677

MASSACHUSETTS
BOSTON
6 PULLMAN STREET
WORCESTER, MA 01606
PHONE: 508-854-0708
FAX: 508-854-0291

MICHIGAN
DETROIT
5993 PROGRESS DRIVE
STERLING HEIGHTS, MI 48312
PHONE: 586-978-9800
FAX: 586-978-9969

MINNESOTA
MINNEAPOLIS
21080 134TH AVE. NORTH
ROGERS, MN 55374
PHONE: 763-428-3633
FAX: 763-428-4551

MISSOURI
ST LOUIS
422 INDUSTRIAL DRIVE
MARYLAND HEIGHTS, MO 63043
PHONE: 314-298-1800
FAX: 314-298-7660

KANSAS CITY
1501 BEDFORD AVENUE
NORTH KANSAS CITY, MO 64116
PHONE: 816-587-0272
FAX: 816-587-3735

NEW YORK
AUBURN
ONE ELLIS DRIVE
AUBURN, NY 13021
PHONE: 315-255-3403
FAX: 315-253-9923

NORTH CAROLINA
GREENSBORO
1220 ROTHERWOOD ROAD
GREENSBORO, NC 27406
PHONE: 336-272-6104
FAX: 336-273-6628

OHIO
CINCINNATI
2929 CRESCENTVILLE ROAD
WEST CHESTER, OH 45069
PHONE: 513-771-2600
FAX: 513-772-2219

CLEVELAND
8929 FREEWAY DRIVE
MACEDONIA, OH 44056
PHONE: 330-468-4777
FAX: 330-468-4778

OKLAHOMA
TULSA
7170 S. BRADEN, SUITE 140
TULSA, OK 74136
PHONE: 918-366-9320
FAX: 918-366-9338

OREGON
PORTLAND
20393 SW AVERY COURT
TUALATIN, OR 97062
PHONE: 503-691-9010
FAX: 503-691-9012

PENNSYLVANIA
PHILADELPHIA
1035 THOMAS BUSCH
MEMORIAL HIGHWAY
PENNSAUKEN, NJ 08110
PHONE: 856-661-1442
FAX: 856-663-6363

PITTSBURGH
159 PROMINENCE DRIVE
NEW KENSINGTON, PA 15068
PHONE: 724-889-0092
FAX: 724-889-0094

TENNESSEE
MEMPHIS
4000 WINCHESTER ROAD
MEMPHIS, TN 38118
PHONE: 901-365-2020
FAX: 901-365-3914

TEXAS
DALLAS
3040 QUEBEC
DALLAS, TX 75247
PHONE: 214-634-7271
FAX: 214-634-8874

HOUSTON
10355 W. LITTLE YORK RD.
SUITE 300
HOUSTON, TX 77041
PHONE: (281) 977-6500
FAX: (281) 977-6510

UTAH
SALT LAKE CITY
2230 SOUTH MAIN STREET
SALT LAKE CITY, UT 84115
PHONE: 801-832-0127
FAX: 801-832-8911

WISCONSIN
MILWAUKEE
2725 SOUTH 163RD STREET
NEW BERLIN, WI 53151
PHONE: 262-784-5940
FAX: 262-784-1215

INTERNATIONAL SALES
FORT SMITH, AR
P.O. BOX 2400
FORT SMITH, AR 72902
PHONE: 479-646-4711
FAX: 479-648-5895

CANADA
EDMONTON, ALBERTA
4053-92 STREET
EDMONTON, ALBERTA T6E 6R8
PHONE: 780-434-4900
FAX: 780-438-2600

TORONTO
OAKVILLE, ONTARIO
2750 COVENTRY ROAD
OAKVILLE, ONTARIO L6H 6R1
PHONE: 905-829-3301
FAX: 905-829-3302

MONTREAL, QUEBEC
5155, J.A. BOMBARDIER
ST-HUBERT (QUÉBEC) CANADA
J3Z 1G4
PHONE: 514-933-2711
FAX: 514-933-8639

VANCOUVER,
BRITISH COLUMBIA
1538 KEBET WAY
PORT COQUITLAM,
BRITISH COLUMBIA V3C 5M5
PHONE 604-421-2822
FAX: 604-421-3113

WINNIPEG, MANITOBA
54 PRINCESS STREET
WINNIPEG, MANITOBA R3B 1K2
PHONE: 204-942-5205
FAX: 204-956-4251

AUSTRALIA
UNIT 3, 6 STANTON ROAD
SEVEN HILLS, NSW 2147, AUSTRALIA
PHONE: (61) (2) 9674 5455
FAX: (61) (2) 9674 2495

UNIT 8, 5 KELLETTS ROAD
ROWVILLE, VICTORIA, 3178 AUSTRALIA
PHONE: (61) (3) 9753 4355
FAX: (61) (3) 9753 4366

EL SALVADOR
RESIDENCIAL PINARES DE SUIZA
POL. 15 #44,
NVA. SAN SALVADOR, EL SALVADOR
PHONE: +503 2288-1519
FAX: +503 2288-1518

CHILE
LUIS THAYER OJEDA 166,
OF 402 - PROVIDENCIA
SANTIAGO, CHILE
PHONE: +56 2 816 9900

CHINA
160 SONG SHENG ROAD
SONGJIANG INDUSTRY ZONE
SHANGHAI 201613, CHINA
PHONE: +86 21 5760 5335
FAX : +86 21 5760 5336

GERMANY
DIESELSTRASSE 22
D-85551 KIRCHHEIM
MUNICH, GERMANY
PHONE: +49 89 90 5080
FAX: +49 89 90 50 8492

INDIA
14, COMMERCE AVENUE
MAHAGANESH COLONY
PAUD ROAD
PUNE - 411038
MAHARASHTRA, INDIA
PHONE: +91 20 25 45 27 17 / 18
FAX: +91 20 25 45 27 19

ITALY
BALDOR ASR AG
SUCCURSALE DI MENDRISIO
VIA BORROMINI, 20A
CH-6850 MENDRISIO
SWITZERLAND
PHONE: 0041 91 640 99 50
FAX: 0041 91 630 26 33

JAPAN
DIA BLDG 802,
2-21-1 TSURUYA-CHO,
KANAGAWA-KU
YOKOHAMA, 221-0835, JAPAN
PHONE: 81-45-412-4506
FAX: 81-45-412-4507

MEXICO
LEON, GUANAJUATO
KM. 2.0 BLVD. AEROPUERTO
LEÓN 37545, GUANAJUATO, MÉXICO
PHONE: +52 477 761 2030
FAX: +52 477 761 2010

MIDDLE EAST & NORTH AFRICA
VSE INTERNATIONAL CORP.
P. O. BOX 5618
BUFFALO GROVE, IL 60089-5618
PHONE: 847 590 5547
FAX: 847 590 5587

PANAMA
AVE. RICARDO J. ALFARO
EDIFICIO SUN TOWERS MALL
PISO 2, LOCAL 55
CIUDAD DE PANAMÁ, PANAMÁ
PHONE: +507 236-5155
FAX: +507 236-0591

SINGAPORE
18 KAKI BUKIT ROAD 3, #03-09
ENTREPRENEUR BUSINESS CENTRE
SINGAPORE 415978
PHONE: (65) 6744 2572
FAX: (65) 6747 1708

SWITZERLAND
POSTFACH 73
SCHUTZENSTRASSE 59
CH-8245 FEUERTHALEN
SWITZERLAND
PHONE: +41 52 647 4700
FAX: +41 52 659 2394

TAIWAN
1F, NO 126 WENSHAN 3RD STREET,
NANTUN DISTRICT,
TAICHUNG CITY 408
TAIWAN R.O.C
PHONE: (886) 4 238 04235
FAX: (886) 4 238 04463

UNITED KINGDOM
6 BRISTOL DISTRIBUTION PARK
HAWKLEY DRIVE
BRISTOL BS32 0BF U.K.
PHONE: +44 1454 850000
FAX: +44 1454 859001

VENEZUELA
AV. ROMA. QTA EL MILAGRO. URB.
CALIFORNIA NORTE
CARACAS, 1070
VENEZUELA
PHONE/FAX: +58 212 272 7343
MOBILE: +58 414 114 8623

763LW-0509

Baldor Electric Company
World Headquarters
P.O. Box 2400, Fort Smith, AR 72902-2400 U.S.A., Ph: (1) 479.646.4711, Fax (1) 479.648.5792, International Fax (1) 479.648.5895
www.baldor.com

© Baldor Electric Company
All Rights Reserved. Printed in USA.
MN763LW
05/09