Profibus DP
Communications Expansion Board
Catalog No. EXBHHO14AXX

12/10 **Installation & Operating Manual** MN758

Any trademarks used in this manual are the property of their respective owners.

Important:
Be sure to check www.baldor.com for the latest software, firmware and drivers for your VS1 product. Also you can download the latest version of this manual in Adobe Acrobat PDF format.

Table of Contents

Chapter 1
General Information
1.1 Introduction 1-1
1.2 Profibus DP Communications Expansion Board Description 1-1
1.3 Version Information 1-1
1.4 Limited Warranty 1-1
1.5 Safety Notice 1-2

Chapter 2
Installation
2.1 Receiving and Inspection 2-1
2.2 Board Installation 2-1
2.3 Profibus DP Cable Connections 2-2
2.4 Terminating Profibus-DP Networks 2-2
2.5 Terminal Strip Connections 2-3
2.6 Powerup 2-3

Chapter 3
Setup
3.1 Hardware Setup 3-1
3.1.1 Module Status LED 3-1
3.1.2 Network Status LED 3-1
3.1.3 Drive Status LED 3-1
3.2 Software Setup 3-2
3.3 Profibus DP Configuration 3-2

Appendix A
Protocol Specifications A-1

Appendix B
Configuration Examples B-1

Appendix C
Sample Programming C-1

Appendix D
32 Bit Float Use and Display Considerations D-1

Chapter 1
Introduction

1.1 Introduction

Baldor controls represent the latest technology in microprocessor based motor controls. In addition to the user programmable parameters available in every control, many different expansion boards are available from Baldor to further customize the control to most any application. Originally designed for the H2 controls, these same boards are compatible with our flagship products, the VS1SP, VS1GV and VS1SD controls.

Table 1-1 VS1 Expansion Boards

Board Name	Catalog No.	Manual No.
Ethernet Server Expansion Board	EXBHH001AXX	MN751
Isolated Input Expansion Board	EXBHH003AXX	MN753
High Resolution Analog Board	EXBHH005AXX	MN754
Master Pulse Reference/isolated Pulse Follower	EXBHH007AXX	MN755
DeviceNet / EtherNet/IP / Modbus/TCP Expansion Board	EXBHH013AXX	MN756
PROFIBUS DP Expansion Board	EXBHH014AXX	MN758
BACnet Communications Expansion Board	EXBHH015AXX	MN769
LonWorks Communications Expansion Board	EXBHH016AXX	MN759
Metasys N2 Communications Expansion Board	EXBHH017AXX	MN770
BACnet/IP / EtherNet/IP / Modbus TCP Expansion Board	EXBHH019AXX	MN757

1.2 Profibus-DP Communications Expansion Board Description

Profibus-DP Communications Expansion Board Catalog No. EXBHH014AXX.
The Profibus expansion board allows a VS1 control to communicate as a node on the Profibus network. It has a DB9 connector to make connection to the network simple.
Profibus-DP is the performance optimized version of PROFIBUS, specifically dedicated to time-critical communication between automation systems and distributed peripherals. It is suitable as a replacement for the costly parallel wiring of 24V and 4(0) to 20mA measurement signals.

1.3 Version Information

Profibus Firmware Version Compatibilty	Drive Firmware
EXBHH014A01	
Any Version	1.22 - 1.23 and Later
1.21 Only	1.19 - 1.21 Only
1.20 and Earlier	1.18 and Earlier
EXBHH014A02	
1.24	1.24 and Later
EXBHH014A03	
1.25	1.25 or Later

1.4 Limited Warranty

For a period of two (2) years from the date of original purchase, BALDOR will repair or replace without charge controls and accessories which our examination proves to be defective in material or workmanship. This warranty is valid if the unit has not been tampered with by unauthorized persons, misused, abused, or improperly installed and has been used in accordance with the instructions and/or ratings supplied. This warranty is in lieu of any other warranty or guarantee expressed or implied. BALDOR shall not be held responsible for any expense (including installation and removal), inconvenience, or consequential damage, including injury to any person or property caused by items of our manufacture or sale. (Some states do not allow exclusion or limitation of incidental or consequential damages, so the above exclusion may not apply.) In any event, BALDOR's total liability, under all circumstances, shall not exceed the full purchase price of the control. Claims for purchase price refunds, repairs, or replacements must be referred to BALDOR with all pertinent data as to the defect, the date purchased, the task performed by the control, and the problem encountered. No liability is assumed for expendable items such as fuses.

Goods may be returned only with written notification including a BALDOR Return Authorization Number and any return shipments must be prepaid.

1.5 Safety Notice

This equipment contains voltages that may be as great as 1000 volts! Electrical shock can cause serious or fatal injury. Only qualified personnel should attempt the start-up procedure or troubleshoot this equipment.

This equipment may be connected to other machines that have rotating parts or parts that are driven by this equipment. Improper use can cause serious or fatal injury. Only qualified personnel should attempt the start-up procedure or troubleshoot this equipment.

CLASSIFICATIONS OF CAUTIONARY STATEMENTS

WARNING: Indicates a potentially hazardous situation which, if not avoided, could result in injury or death.

CAUTION: Indicates a potentially hazardous situation which, if not avoided, could result in damage to property.

PRECAUTIONS

WARNING: Do not touch any circuit board, power device or electrical connection before you first ensure that power has been disconnected and there is no high voltage present from this equipment or other equipment to which it is connected. Electrical shock can cause serious or fatal injury. Only qualified personnel should attempt the start-up procedure or troubleshoot this equipment.

WARNING: Be sure that you are completely familiar with the safe operation of this equipment. This equipment may be connected to other machines that have rotating parts or parts that are controlled by this equipment. Improper use can cause serious or fatal injury. Only qualified personnel should attempt the start-up procedure or troubleshoot this equipment.

WARNING: Be sure the system is properly grounded before applying power. Do not apply AC power before you ensure that all grounding instructions have been followed. Electrical shock can cause serious or fatal injury.

WARNING: Do not remove cover for at least five (5) minutes after AC power is disconnected to allow capacitors to discharge. Dangerous voltages are present inside the equipment. Electrical shock can cause serious or fatal injury.

WARNING: Improper operation of control may cause violent motion of the motor shaft and driven equipment. Be certain that unexpected motor shaft movement will not cause injury to personnel or damage to equipment. Peak torque of several times the rated motor torque can occur during control failure.

WARNING: Motor circuit may have high voltage present whenever AC power is applied, even when motor is not rotating. Electrical shock can cause serious or fatal injury.

WARNING: MEDICAL DEVICE/PACEMAKER DANGER - Magnetic and electromagnetic fields in the vicinity of current carrying conductors and industrial motors can result in a serious health hazard to persons with cardiac pacemakers, internal cardiac defibrillators, neurostimulators, metal implants, cochlear implants, hearing aids, and other medical devices. To avoid risk, stay away from the area surrounding a motor and its current carrying conductors.

CAUTION: To prevent equipment damage, be certain that the electrical service is not capable of delivering more than the maximum line short circuit current amperes listed in the appropriate control manual, 240 VAC, 480 VAC or 600 VAC maximum per control rating.

CAUTION: Before you proceed, be sure to read and become familiar with the safety precautions at the beginning of this manual. If you have any questions, seek expert advise before you proceed. Do not proceed if you are unsure of the safety precautions or any procedure.

CAUTION: Be sure all packing materials are removed from the board. Conductive foam may be present on the connectors to prevent static build up during shipping. This can prevent proper circuit operation.

CAUTION: Static electricity damages electrical components. This board has static sensitive components installed. Be sure to comply with ESD (Electro Static Discharge) procedures when handling circuit boards and components.

Chapter 2
Installation

This section describes the expansion board installation procedure.

CAUTION: Before you proceed, be sure to read and become familiar with the safety precautions at the beginning of this manual. Do not proceed if you are unsure of the safety precautions described. If you have any questions, contact Baldor before you proceed.

2.1 Receiving and Inspection

1. Observe the condition of the shipping container and report any damage immediately to the commercial carrier that delivered your control.
2. Remove the control from the shipping container and remove all packing materials from the control. The container and packing materials may be retained for future shipment.
3. Verify that the part number of the control you received is the same as the part number listed on your purchase order.
4. Inspect the control for external physical damage that may have been sustained during shipment and report any damage immediately to the commercial carrier that delivered your control.
5. If the control is to be stored for several weeks before use, be sure that it is stored in a location that conforms to published storage humidity and temperature specifications stated in this manual.
6. Utilize Communications board FW version A03 or later of Profibus systems where control of the drives is required across the Network and Drive FW version 1.25 or greater must be utilized for handling the Profibus traffic as performance has been changed to better handle various network traffic scenarios.

   Network Loss faults are generated under the following conditions:
   a. Cable/switch connection loss
   b. Processor Idle condition
   c. Connection disconnect for more than 5 seconds

2.2 Board Installation

The board has static sensitive components installed. Be sure to comply with ESD (Electro Static Discharge) procedures when handling boards.

1. Remove the expansion board from the shipping container.
2. Remove all packing material from the board.

CAUTION: Be sure all packing materials are removed from the board. Conductive foam may be present on the connectors to prevent static build up during shipping. This can prevent proper circuit operation.

3. Be sure drive operation is terminated and secured.
4. Remove all power sources from the control.
5. Wait at least 5 minutes for internal capacitors to discharge.
6. Refer to the control manual and remove the enclosure cover.
7. Open the control cover and locate Slots 1 & 2, see Figure 2-1.

Note: Slot 3 is reserved for a feedback board only, encoder or resolver.

8. Install the expansion board in Slot 1 or 2. Be sure the board is securely pressed downward and makes good contact with the 48 pin connector in the slot position.
9. Secure the expansion board in the slot using the screw provided.

Figure 2-1 Expansion Board Slot Locations

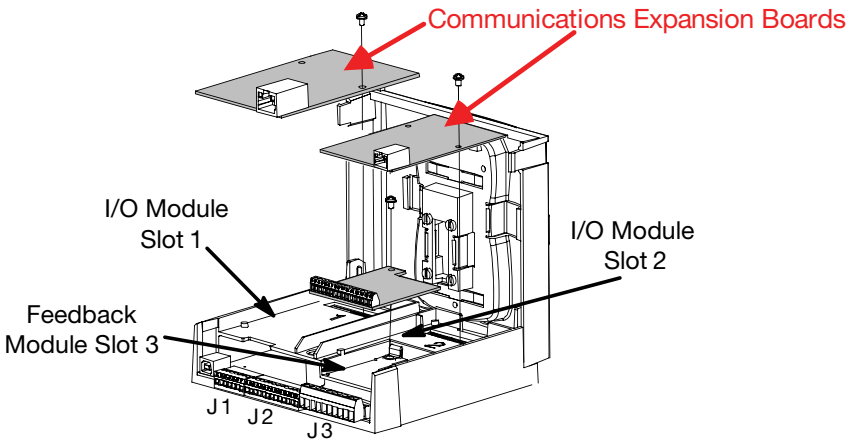

10. The mechanical installation of the expansion board is complete.

The Profibus-DP connections can now be completed.

2.3 Profibus-DP Cable Connections

Connect the Profibus-DP cable to J1 (DB9 connector provided with the expansion board shown in Figure 2-2).

Figure 2-2 Cable Connections

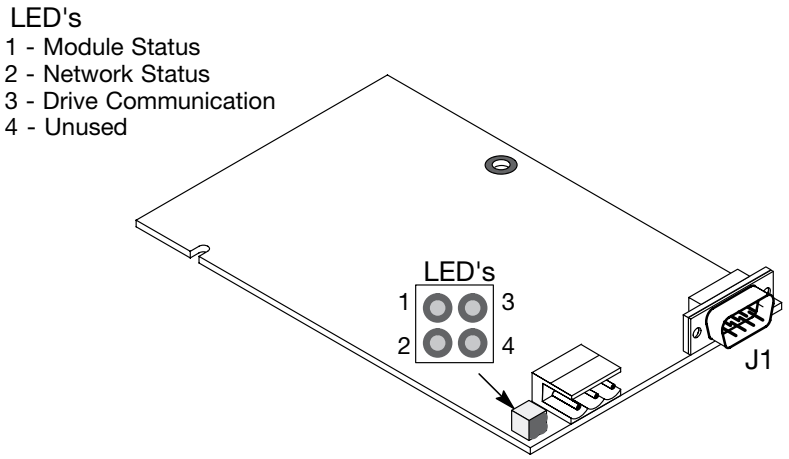

2.4 Terminating Profibus-DP Networks

The EXBHH014AXX Option Board supports a Profibus-DP Network connection for the VS1SP, GV, SD, PM and CTD drives. This option does not support a connection to a Profibus-PA Network.

For a Profibus-DP Network to function properly and optimally, it is necessary that the network be properly terminated. This is especially true for the higher baud rates of communication that Profibus-DP supports.

Profibus-DP uses an Active Termination device that is commonly embedded in the 9-pin D-shell Profibus-DP connector. Both ends of each Profibus-DP segment must be terminated with the Active Termination device. Typically, the termination is activated by a switch located on the 9-pin D-shell connector. Nodes in the middle of the Profibus-DP segment (i.e. not located at the ends) must have the Active Termination device disabled so as to not impact network performance.

See the documentation that shipped with your Profibus-DP Master Communication Module for additional Profibus-DP Network information.

Figure 2-3 Example of Terminating 9-Pin D-Shell Connector

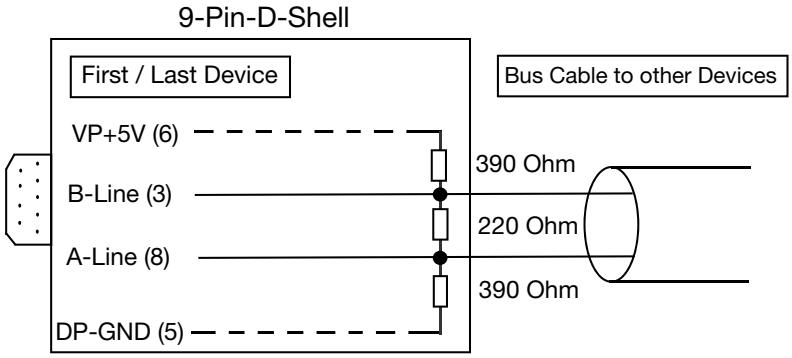

2.5 Terminal Strip Connections

For Network Mode operation, the Input/Output terminal strip of the control is wired as shown in Figure 2-4. The Enable, Forward Enable and Reverse Enable inputs must be connected. For additional information, refer to the Control Installation and Operating manual.

Figure 2-4 Terminal Strip Connection Diagram

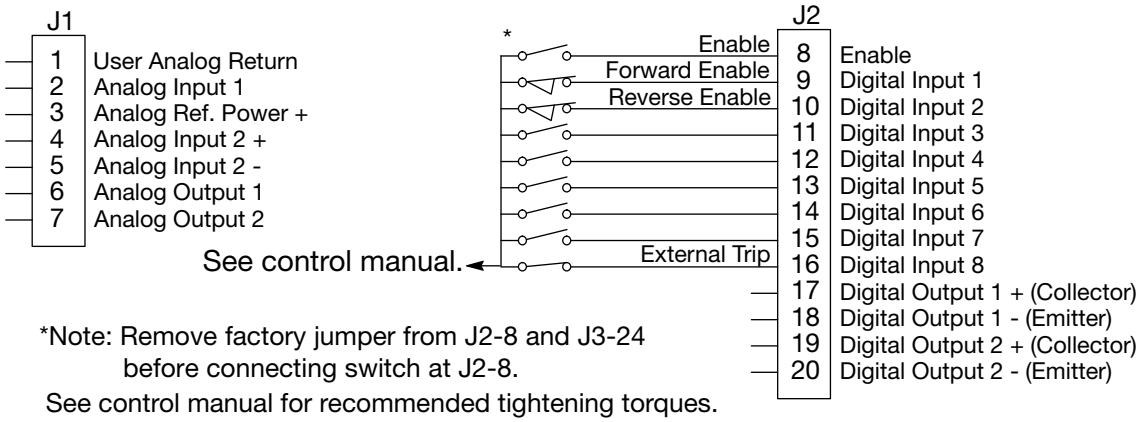

J2-8	CLOSED allows normal control operation. OPEN disables the control and the motor coasts to a stop.
J2-9	CLOSED to enable operation in the Forward direction. OPEN TO DISABLE Forward operation (drive will decel to a stop if a Forward command is still present). Reverse operation is still possible if J2-10 is closed.
J2-10	CLOSED to enable operation in the Reverse direction. OPEN to disable Reverse operation (drive will decel to a stop if a Reverse command is still present). Forward operation is still possible if J2-9 is closed.
J2-16	Optional External Trip input (not required). If used, you must set Level 2 Drive Protect block, External Trip to “ON”. CLOSED allows normal operation. OPEN causes an External Trip to be received by the control (when programmed to “ON”).

2.6 Powerup

When the expansion board is installed, the covers can be closed and the control can be powered up. The expansion board will perform self tests and display resulting status on the LEDs.

This protocol although adequate for most applications, may not be the best choice for Time critical/time repeatable applications that require Responses in the sub-hundreds of mSec range. Care should be exercised in the selection of the protocol or type of control that will provide sufficient and adequate control in a timely fashion for your application.
See Section 3 and Appendices B and C for additional software setup information.

Chapter 3
Setup

3.1 Hardware Setup

The EXB (expansion board) has four bi-color (green/red) LED indicators to indicate Module, Network and Drive Status. The bottom right LED is unused.

3.1.1 Module Status LED (Table 3-1)

The Module Status LED indicator (top left LED) shows device status.

Table 3-1 Module Status

Indicator State	Device State	Description
Steady Off	No Power	There is no power applied to the EXB.
Steady Green	Operational	The EXB is operating normally.
Flashing Green	Standby	The EXB is in standby, waiting for configuration.
Flashing Red	Minor Fault	The EXB has experienced a recoverable fault, such as an invalid configuration.
Steady Red	Major Fault	The EXB has experienced an unrecoverable fault, and may need repair or replacing
Flashing Green/ Red	Device Self-Test	The EXB is performing its power-up self-test.

3.1.2 Network Status LED (Table 3-2)

The Network Status LED indicator (bottom left LED) shows the status of the communications link.

Table 3-2 Network Status

Indicator State	Device State	Description
Steady Off	Not Powered/ Not Online	The EXB is either not powered, or has not established data exchange with a Profibus DP host.
Steady Green	Data Exchange	The EXB is actively exchanging data with a Profibus DP host.
Steady Red	Profibus Error	The EXB has detected an error that has rendered it incapable of communicating on the Profibus DP network.
Flashing Green/ Red	Device Self-Test	The EXB is performing its power-up self-test.

3.1.3 Drive Status LED (Table 3-3)

The Drive Status LED indicator (top right LED) shows device status.

Table 3-3 Drive Status

Indicator State	Device State	Description
Steady Red	Error	Error communicating with the drive.
Steady Green	Operational	Drive communication is established.

3.2 Software Setup

A few parameters must be set before the control can be controlled over the network. Use the Keypad to set the following:

1. Set the Level 1, Input Setup, Operating Mode (P1401) to Network.
2. Set the Level 1, Input Setup, Command Source (P1402) to Network.
   Note: The command source can be any local source for P1402.
3. Set the Level 1, Communication, OptX Protocol to Profibus.
   Note: OPTX is the slot "X" of the EXB. For example, if the EXB is installed in Slot1 this is OPT1 Protocol (P1720). Slot 2 this is OPT2 Protocol (P1770).
4. Set the Level 1, Communication, Baud Rate to the value of the network baud rate.
5. Set the Level 1, Communication, OptX Slave ID to the desired Slave ID address.
   Note: OPTX is the slot "X" of the EXB. For example, if the EXB is installed in Slot1 this is OPT1 Slave ID (P1722). Slot 2 this is OPT2 Slave ID (P1772).
6. Set the Level 1, Communications, Data Format P# as required (16 Bit Integer, 32 Bit Integer or Native).
7. Use the Local/Remote key to place the drive in Remote mode. Note: If set to 16 or 32 bit, the EXB will translate I/O data between the native length (used in the drive) and the desired I/O format. This is performed using appropriate scale factors.

3.3 Profibus DP Configuration

The GSD file is used by Profibus to communicate with the Baldor Profibus expansion board. The H2PF0AF7.GSD file is provided on CD or can be downloaded from the Baldor website. A Profibus configuration tool should be used to configure the expansion board.

Baud Rates

Usually set to Autobaud 12MB or whatever your system Baud rate is, if uncertain the autobaud setting will work if the system is up when the Drive is powered up so it can detect the System baud rate.

Supported Baud Rates are 9.6KB _19.2KB _93.75KB _187.5KB _500KB _1.5MB _6MB _12MB and Autobaud

Note: If the processor chosen to control must send data in either 16 Bit because of processor limitations or 32 Bit then set accordingly, (Conversion from and to 16 or 32 bit words is required) if not set to Native. (Note: Native Mode means that a 32 Bit Float will be sent as IEEE format, and 16 Bit as 16 Bit etc. No Conversion is necessary.)

Data Exchange with the Profibus Expansion Board

This section describes how data is mapped for data exchange between the Profibus Host and the control. Data mapping allows the Profibus Host to control the drive and monitor drive status as well as read and write drive configuration parameters.

Information from the control is mapped directly to Profibus Output words. Status information is mapped directly to Profibus Input data.

Three Profibus Output data words can be used to specify drive configuration parameters to be written or read. The results of these requests are reflected in the Profibus Input data. The Input / Output data format is given in Tables 3-4 and 3-5.

Output Data is sent from a Profibus host to the EXB.

Input Data is sent from the EXB to a Profibus host.

Output Data

The format of the Output Data is shown in Table 3-5. Output bits 1 (bit 0) through 4 (bit 3) control the digital outputs of the Control. When one of these components changes states, the value (0 or 1) is written to the corresponding Coil (00097 – 100, respectively) within the Control.

Run Command

The Run Command (bits 4 & 5) of the Output Data (Table 3-5) commands the Control to stop or run under network control. The Run Command is interpreted as follows:

Value	Description	Action	Value	Description	Action
0	Stop	Write 1 to Coil 00078	2	Run Reverse	Write 1 to Coil 00080
1	Run Forward	Write 1 to Coil 00079	3	Run Bipolar	Write 1 to Coil 00081

Local/Remote (bit 6)

0 = Local Control Source; 1 = Remote Control Source.

Network (bit 7)

0 = Off Network; 1 = Network Control Source.

Table 3-4 Input Data Table from Drive to Master

Input Table **(as seen To the Master)** **(From the Drive)**

	Word 32 Bit	Word 16 Bit	Byte Number		7	6	5	4	3	2	1	0	7	6	5	4	3	2	1	0
Command	0	0	00	01	0	Force Fault	Clear Fault	Drive Enable	Control Mode				Network	Local/ Remote	Run Command		Digital Out 4	Digital Out 3	Digital Out 2	Digital Out 1
		1	02	03	0	0	0	0	0	0	0	0	0	0	0	0	Command Source			
Mailbox	1	2	04	05	Register number Read (High Byte)								Register number Read (Low Byte)							
		3	06	07	Register Value Read (High - High Byte)								Register Value Read (High - Low Byte)							
	2	4	08	09	Register Value Read (Low - High Byte)								Register Value Read (Low - Low Byte)							
		5	10	11	Register number Written (High Byte)								Register number Written (Low Byte)							
HZ	3	6	12	13	Speed Command Hz (High - High Byte)								Speed Command Hz (High - Low Byte)							
		7	14	15	Speed Command Hz (Low - High Byte)								Speed Command Hz (Low - Low Byte)							
RPM	4	8	16	17	Speed Command RPM (High - High Byte)								Speed Command RPM (High - Low Byte)							
		9	18	19	Speed Command RPM (Low - High Byte)								Speed Command RPM (Low - Low Byte)							
Status	5	10	20	21	Drive Status 1 (High - High Byte)								Drive Status 1 (High - Low Byte)							
		11	22	23	Drive Status 1 (Low - High Byte)								Drive Status 1 (Low - Low Byte)							
	6	12	24	25	Drive Status 2 (High - High Byte)								Drive Status 2 (High - Low Byte)							
		13	26	27	Drive Status 2 (Low - High Byte)								Drive Status 2 (Low - Low Byte)							
Fault		14	28	29	Active Fault (High Byte)								Active Fault (Low Byte)							
I/O	7	15	30	31	0	0	0	0	0	0	0	Digital Input 9	Digital Input 8	Digital Input 7	Digital Input 6	Digital Input 5	Digital Input 4	Digital Input 3	Digital Input 2	Digital Input 1

Table 3-5 Output Data Table from Master to Drive

Output Table (**as seen from the Master)** **(To the Drive)**

	Word 32 Bit	Word 16 Bit	High Byte	Low Numbers	7	6	5	4	3	2	1	0	7	6	5	4	3	2	1	0	
		0	00	01	0	Force Fault	Clear Fault	Drive Enable	Control Mode				Network	Local/ Remote	Run Command		Digital Out 4	Digital Out 3	Digital Out 2	Digital Out 1	
Command	0	1	02	03	0	0	0	0	0	0	0	0	0	0	0	0	Command Source				1
		2	04	05	Register to Read (High Byte)								Register to Read (Low Byte)								
	1	3	06	07	Register Value Write (High - High Byte)								Register Value Write (High - Low Byte)								
		4	08	09	Register Value Write (Low - High Byte)								Register Value Write (Low - Low Byte)								
Mailbox	2	5	10	11	Register to Write (High Byte)								Register to Write (Low Byte)								
		6	12	13	Speed Command Hz (High - High Byte)								Speed Command Hz (High - Low Byte)								2
HZ	3	7	14	15	Speed Command Hz (Low - High Byte)								Speed Command Hz (Low - Low Byte)								
		8	16	17	Speed Command RPM (High - High Byte)								Speed Command RPM (High - Low Byte)								2
RPM	4	9	18	19	Speed Command RPM (Low - High Byte)								Speed Command RPM (Low - Low Byte)								
Current		10	20	21	Network Current Limit (High - High Byte)								Network Current Limit (High - Low Byte)								
Limit	5	11	22	23	Network Current Limit (Low - High Byte)								Network Current Limit (Low - Low Byte)								
Analog		12	24	25	Analog Output 1 (High - High Byte)								Analog Output 1 (High - Low Byte)								3
Out	6	13	26	27	Analog Output 1 (Low - High Byte)								Analog Output 1 (Low - Low Byte)								
Analog		14	28	29	Analog Output 2 (High - High Byte)								Analog Output 2 (High - Low Byte)								4
Out	7	15	30	31	Analog Output 2 (Low - High Byte)								Analog Output 2 (Low - Low Byte)								

1 Control mode needs to be set to Network to use from Network.
2 Command Source must be set to Network to Cmd from Network.
3 Analog Out 1 must be set to Network to Cmd from Network.
4 Analog Out 2 must be set to Network to Cmd from Network

Drive Enable must be true, a Run Command Bit true,
and a Reference Sent to Control the Drive from the Network

Command Source

The Command Source word of the Output Data (Table 3-5) determines where the Speed or Torque Reference originates. When the Command Source value received changes states, the appropriate command is sent to the Control, as follows:

Value	Description	Action
0	None	Set P1402 to 0
1	Analog Input 1	Set P1402 to 1
2	Analog Input 2	Set P1402 to 2
3	Keypad	Set P1402 to 3
4	Network	Set P1402 to 4
5	Composite Reference	Set P1402 to 5
6	Option 1 Analog Input 1	Set P1402 to 6
7	Option 1 Analog Input 2	Set P1402 to 7
8	Option 2 Analog Input 1	Set P1402 to 8
9	Option 2 Analog Input 2	Set P1402 to 9
10	EXB Pulse Follower	Set P1402 to 10
11 – 15	-	No Action

Control Mode

The Control Mode word of the Output Data (Table 3-5) determines the mode Control, as follows:

Value	Description	Action
0	Null Mode	Write 1 to Coil 00001
1	Torque Mode	Write 1 to Coil 00002
2	Speed Mode	Write 1 to Coil 00003
3	Orientation Mode	Write 1 to Coil 00004
4	Not Supported	
5	Not Supported	
6	Not Supported	
7	Not Supported	
8	Homing Mode	Write 1 to Coil 00009
9	Process Torque Mode	Write 1 to Coil 00010
10	Process Velocity Mode	Write 1 to Coil 00011
11	Auto Tune Mode	Write 1 to Coil 00012
12	Network Mode Current Limiting	Write 1 to Coil 00013
13 – 15	-	No Action

Drive Enable

The Drive Enable word of the Output Data (Table 3-5) enables or disables the VS1 Drive. When the Drive Enable value received changes states, the value (0 or 1) is written to VS1 Drive Coil 00082.

Fault Reset

The Fault Reset word of the Output Data (Table 3-5) sets the fault-reset coil in the VS1 Drive. When the Fault Reset value received changes states, the value (0 or 1) is written to VS1 Drive Coil 00066.

Force Fault

The Force Fault word of the Output Data (Table 3-5) sets the force fault coil in the VS1 Drive. When the Force Fault value received changes states, the value (0 or 1) is written to VS1 Drive Coil 00065.

Parameter Read/Write Block

The Parameter Read/Write Block word of the Output Data (Table 3-5) is used to dynamically read and/or write Registers in the VS1 Drive. When a Parameter Number is placed in the Parameter Number to Read component of the Output Data, the EXB will read the corresponding register(s) from the VS1 Drive. If the Parameter Number references a Coil (0xxxx) or Discrete Input (1xxxx), the value returned is placed in the least significant bit (byte 4, bit 0) of the Parameter Value Read component of the Input Data.

If the Parameter Number references an Input (3xxxx) or Holding Parameter (4xxxx), two sequential 16-bit registers are read (starting with the Parameter Number to Read), and the resulting 32-bit value is placed in the Parameter Value Read component of the Input Data. In any case, if the Read operation was successful, the Parameter Number to Read component from the Output Data is placed in the Parameter Number Read component of the Input Data. If the Read operation failed, a value of 0xFFFF is placed in the Parameter Number Read component of the Input Data.

If the Parameter Number to Read component of the Output Data contains a value of 0, a value of 0 is placed in the Parameter Number Read component of the Input Data, and no other action is taken.

When a Parameter Number is placed in the Parameter Number to Write component of the Output Data, and a value is placed in the Parameter Value to Write component of the Output Data, the EXB will attempt to write the value to the corresponding register(s) in the VS1 Drive. If the Parameter Number references a Coil (0xxxx), the value to be written is determined by the least significant bit (byte 4, bit 0) of the Parameter Value to Write component of the Output Data. If the Parameter Number references a Holding Parameter (4xxxx+), the 32-bit value from the Parameter Value to Write component of the Output Data is written to two sequential 16-bit registers (starting with the Parameter Number to Write). In either case, if the Write operation was successful, the Parameter Number to Write component of the Output Data is placed in the Parameter Number Written component of the Input Data. If the Write operation failed, or the Parameter Number was invalid, a value of 0xFFFF is placed in the Parameter Number Written component of the Input Data.

If the Parameter Number to Write component of the Output data contains a value of 0, a value of 0 is placed in the Parameter Number Written component of the Input Data, and no other action is taken.

Hz Speed Reference

The Hz Speed Reference word of the Output Data is the Speed Reference of the drive in Network Mode. It is a 16-bit Integer value with units of 0.01 Hz, and a range of 0.00 to 500.00 Hz. When the value of this component changes, it is converted to floating-point and written to Drive Holding Registers 40013-14.

RPM Speed Reference

The RPM Speed Reference word of the Output Data is the Speed Reference of the drive in Network Mode. It is represented as a 32-bit Integer value with units of 0.01 RPM, and a range of 0.00 to 30000.00 RPM. Whenever the value of this component changes, it is converted to floating-point and written to Drive Holding Registers 40015-16.

Current Limit

The Current Limit word of the Output Data is the Current Limit of the VS1 Drive in Network Mode. It is represented as a 16-bit Integer value with units of 0.01%, and a range of 0.00 to 100.00%. Whenever the value of this component changes, it is converted to floating-point and written to Drive Holding Registers 40029-30.

Analog Output 1-2

Analog Output 1 and Analog Output 2 words of the Output Data control Analog Outputs 1-2 of the VS1 Drive in Network Mode. It is represented as 16-bit Integer values with units of ±0.01%. Analog Output 1 has a range of 0.00 to 100.00%, whereas Analog Output 2 has a range of -100.00 to +100.00%. Whenever the value of one of these components changes, it is converted to floating-point and written to Drive Holding Registers 40101-102 or 40103-104 respectively.

Input Data

The format of the Input Data is shown in Table 3-4.

Digital Outputs 1 - 4

Digital Outputs 1 through 4 of the Input Data (Table 3-4) is the most recent values of the VS1 Drive Digital Outputs 1-4. Coils 00097-100 are read from the VS1 Drive, and the resulting values (0 or 1) are placed in the Input Data.

Run Command

The Run Command word of the Input Data is the actual state of the Run Command.

Local/Remote (bit 6)

0 = Local Control Source; 1 = Remote Control Source.

Network (bit 7)

0 = Off Network; 1 = Network Control Source.

Command Source

The Command Source word of the Input Data is the most recent value of the Command Source Parameter (P1402) in the VS1 Drive. Holding Registers 43804-05 are read from the VS1 Drive and the resulting value (0-8) is placed in the Input Data.

Control Mode
The Control Mode word of the Input Data is the current value of the Control Mode.

Parameter Read/Write Block
See “Parameter Read/Write Block” (Output Data) for this description.

Drive Status 1-2
Unused at this time.

Digital Input 1-9
Digital Inputs 1 through 9 of the Input Data are the most recent values of Digital Inputs 1-9 in the VS1 Drive. Discrete Inputs 10065-73 are read from the VS1 Drive, and the resulting values (0 or 1) are placed in the Input Data.

Active Fault Code
The Active Fault Code word of the Input Data is the most recent value of the Active Fault Code Parameter (P#24) in the VS1 Drive. Holding Registers 41048-49 are read from the VS1 Drive and the resulting 32-bit Integer value is placed in the Input Data. The fault codes are shown in Table 3-8.

Drive Status Words are as follows:

Table 3-6 Drive Status Word 1 Low

Status Word One			
Word	**Bit**	**Drive Status**	**Definition**
1 Low	0	Enable	drive hardware enabled
1 Low	1	Ready	drive enabled and ready to accept speed/torque command
1 Low	2	On	drive capable of producing torque
1 Low	3	FwdCmd	drive is on and has a positive speed demand
1 Low	4	RevCmd	drive is on and has a negative speed demand
1 Low	5	Stop	drive is on and has a zero speed demand
1 Low	6	Jog	drive is in jog mode
1 Low	7	MotorFwd	motor is turning in forward direction (closed loop vector only)
1 Low	8	MotorRev	motor is turning in reverse direction (closed loop vector only)
1 Low	9	TorqueMode	drive is in torque mode
1 Low	10	SpeedMode	drive is in speed mode
1 Low	11	VoltFreqMode	drive is in V/F mode
1 Low	12	FlashBootMode	drive is in flash boot mode
1 Low	13	ClosedLoopVectorMode	drive is in closed loop vector mode
1 Low	14	OpenLoopVectorMode	drive is in open loop vector mode
1 Low	15	BrushlessDCMode	drive is in brushless DC mode

Table 3-7 Drive Status Word 1 High

Status Word One				
Word	**Bit**	**Bit**	**Drive Status**	**Definition**
1 High	0	16	DynamicBrake	dynamic brake on
1 High	1	17	FoldBack	foldback active
1 High	2	18	DriveFault	drive fault
1 High	3	19	DriveWarning	drive warning
1 High	4	20	AtSpeed	at speed
1 High	5	21	AtZeroSpeed	at zero speed
1 High	6	22	FollowingError	following error
1 High	7	23	Overload^{2}T	I2t overload
1 High	8	24	Accelerate	speed demand accelerating
1 High	9	25	ConstantSpeed	speed demand constant
1 High	10	26	Decelerate	speed demand decelerating
1 High	11	27	KeypadControl	drive is in keypad local mode
1 High	12	28	AtPosition	actual position is within the position band
1 High	13	29	Reserved	reserved
1 High	14	30	ProcessError	process feedback is outside at setpoint band
1 High	15	31	NetworkControl	drive in network mode and using network ref

Table 3-8 Drive Status Word 2 Low

Status Word Two			
Word	**Bit**	**Drive Status**	**Definition**
2 Low	0	Positive Torque Command (Torque Mode Only)	PositiveTorqueCommand
2 Low	1	Negative Torque Command (Torque Mode Only)	NegativeTorqueCommand
2 Low	2	At Speed Band	AtSpeedBand
2 Low	3	At Set Speed	AtSetSpeed
2 Low	4	Current Overload	CurrentOverload
2 Low	5	Current Underload	CurrentUnderload
2 Low	6	Parameter writes are locked to modbus comms channels	CommParamLock
2 Low	7	Reserved	Reserved
2 Low	8	Reserved	Reserved
2 Low	9	Reserved	Reserved
2 Low	10	Reserved	Reserved
2 Low	11	Reserved	Reserved
2 Low	12	Reserved	Reserved
2 Low	13	Reserved	Reserved
2 Low	14	Reserved	Reserved
2 Low	15	Reserved	Reserved

Drive Status Word 2 High bits are all reserved.

Table 3-9 Active Fault Codes

Code	Name	Description
0	None	No Fault Exist
1	Unknown	This fault should not occur. Seek expert advise.
2	Configure	Some drive feature or option has failed initial startup tests. Seek expert advise.
3	SPI Timeout	Comms Error between control board and power board. Cycle power to reset.
4	Parameter Checksum	Cycle power. If no change, load Factory Settings
5	New Base ID	Control board detected new or a different power base. Press RESET to clear. Factory settings will be restored
6	Overcurrent	Motor current exceeded peak limit. Check: motor connections, motor load, increase acc/dec times
7	Desaturation	Output current exceeds desat limit. Check: motor for short circuit, motor load, increase acc/ dec
8	Ground	Ground currents in output of control. Disconnect motor, meg motor for insulation leakage to ground
9	Logic Supply	Internal logic power supply has dropped below 24V threshold. Replace Power Supply
10	Powerbase	Seek expert advise.
11	Low Initial Bus	Bus volt below 200/400/500V on 230/460/575V units at power up. Check: line volt, resistors on R1/ R2
12	Phase Current	Occurs on power up, motor current sensor(s) out of tolerance
13	User Reference Voltage	Seek expert advise.
14	24V Supply	24V on J1-23 and J1-24 out of spec. Check 24V, if below, remove wiring from terminal strip, re-check
15	Current Reference Voltage	Seek expert advise.
16	Long Overload	Motor current exceeded 150% for 1 minute. Check motor load. Extend acc/dec times
17	Short Overload	Motor current exceeded 175% for 3 seconds. Check motor load. Extend acc/dec times
18	Follow Error	Speed error beyond Set Speed Band parameter. Verify motor is not overload
19	Bus Overvoltage	DC Bus V over 405/810/1000V for 230V/460V/575V units. Check line volt, decel rates, resistor on R1/ R2
20	Bus Undervoltage	DC Bus V below 220/440/550V for 230V/460V/575V units. Check line volt, B+ to B- volt
21	Heat Sink	Heatsink temp exceeded 85/95 C. Verify ambient does not exceed 45C. Clean fans and heatsink
22	External Trip	J1-16 is open. Check remote connection on J1-16. Occurs only when external fault parameter is turned ON
23	Motor Overload	Motor thermal connection at TH1-TH2 open circuit. Ohm connections at TH1-TH2
24	Torque Proving	Failed to read current in all 3 motor phases. Check motor connections or open motor contacts
25	Dynamic Brake Overload	Brake resistor overloaded. Check resistor ratings, extend decel times, or add larger braking kit
26	Powerbase EE	Problem read/write to EEPROM device. Check connections to power base, cycle power
27	EE to Param	Problem reading EEPROM on the control board, please Seek expert advise.
28	EE to Fault Log	Problem reading fault log from control board EEPROM, please Seek expert advise.
29	Fault Log to EE	Problem writing fault log to control board EEPROM, please Seek expert advise.
30	Parameter to EE	Problem writing a parameter to the control board EEPROM, please Seek expert advise.
31	Header to EE	Problem writing the header record to the control board EEPROM, please Seek expert advise.
32	Write to EE	Problem writing a parameter to the control board EEPROM, please Seek expert advise.
33	Software Version	Seek expert advise.
34	Line Regen	Seek expert advise.
35	Firmware	Seek expert advise.
36	Brake IGBT	Dynamic braking current limit exceeded. Check for shorted braking resistor circuit
37	Line Loss	All 3 input phases lost. Check input circuit breaker, fuses or input contacts
38	Phase Loss	Single input phase lost. Check input circuit breaker, fuses or input contacts
39	UU	Transistor #1 failed to fire or misfired
40	UL	Transistor #1 failed to fire or misfired
41	VU	Transistor #2 failed to fire or misfired
42	VL	Transistor #2 failed to fire or misfired
43	WU	Transistor #3 failed to fire or misfired
44	WL	Transistor #3 failed to fire or misfired
45	PP Phase 1	Phase 1 curr limiting via pulse by pulse method; check motor: spiking loads, chattering contacts
46	PP Phase 2	Phase 2 curr limiting via pulse by pulse method; check motor: spiking loads, chattering contacts

Table 3-9 Active Fault Codes Continued

Code	Name	Description
47	PP Phase 3	Phase 3 curr limiting via pulse by pulse method; check motor: spiking loads, chattering contacts
48	Network	Forced network fault. Possible reason: watchdog, timing, user control …
49	Memory Allocation	Option card problem, memory failure, seek expert advise.
50	Driver Not Found	Option card problem, card not supported or not recognized. Check: drive firmware version
51	Aux Filter Setup	Filter Source should be set to Raw Speed when destination is set to Speed Loop
52	Power Base FPGA	Power base communication loss or invalid FPGA version, seek expert advise
53	Encoder Selected	Feedback Source Not Selected/Feedback Board is absent. Choose an appropriate card for encoder/resolver
54	Download	Parameter download from keypad or network has failed. Verify parameter set compatibility
55	Parameter Lock	Parameters momentarily locked. Wait 30 seconds, try again
56	Non-Encoder Source	Feedback board not installed on this slot. Select an Encoder/Resolver board as feedback source
57	Calibration	seek expert advise
58	Encoder Loss	Encoder detected but has poor or no signal. Check encoder wiring
59	Overspeed	Rotor speed over 110% maximum speed limit
60	Precharge	Dynamic Brake miswired; AC Input too low; Bus Caps shorted or Input Single Phasing. Check motor thermal leads
61	Motor Overtemp	Motor has overheated, check: cooling system or blocked air flow
62	Fan Alarm	Fan circuit is seeing low current or over current. Check fan circuit
63	DC Peak Overvoltage	Bus peak voltage rating exceeded. Check: AC input lines; sizing of dynamic break
64	Line Sag	All 3 phase input lines have sagged below 70% of nominal. Check input line quality
65	Brake Desaturation	Dynamic brake de-saturation has occurred. Check dynamic brake circuit
66	Drive Disabled	Motion command given with drive disabled. Check: drive enable input
67	Drive Enabled	Drive enabled during parameter download. Drive must be disabled
68	Power Base Power Supply	Power Base Logic Power Supply below acceptable operating levels
69	AC Overvoltage	Check AC Input Line Voltage
70	Resolver Feedback	The initial position reading could not be read or is out of expected range
71	Resolver Select	The feedback source selected is not a resolver board
72	Resolver Loss	Resolver detected but has poor or no signal. Check resolver wiring
73	MPF Setup	Pulse Follower Option Board Setup. Check Master PPR, Receive, Transmit Ratio and Input Type
74	Option	Option Board for the feature requested is not installed
75	Position Counter	Position counter has has exceeded max or min range
76	Low Temperature	Heat sink Temperature is lower than allowed
77	Option 1 Protocol	Invalid protocol selected for optional communication card 1
78	Option 2 Protocol	Invalid protocol selected for optional communication card 2
79	Excess Fault Hour	The allowed number of faults/hour has been exceeded
80	Motor Overload	Motor overloaded. Check motor load. Verify motor rated amps parameter
81	PLC Trip	PLC Mode Trip. PLC action has generated trip. Check PLC program logic
82	RTC Message 2	Triggered from RTC Module
83	RTC Message 3	Triggered from RTC Module
84	RTC Message 4	Triggered from RTC Module
85	RTC Message 5	Triggered from RTC Module
86	RTC Message 6	Triggered from RTC Module
87	RTC Message 7	Triggered from RTC Module
88	RTC Message 8	Triggered from RTC Module
89	RTC Message 9	Triggered from RTC Module
90	Macro Read	Macro record read failed
91	Macro Record Length	Macro record length is invalid
92	Macro Command Invalid	Macro command found is invalid
93	Macro Command Failed	Macro command executed failed

Appendix A
Protocol Specifications

Profibus Protocol Information

Protocol Name:	Profibus DP (I.e. “Decentralized Periphery”)
Technology Developer:	German Government with Automaton Industry Partners
Year Introduced:	1989
Governing Standards:	Open Standard based on RS485 and the European EN50170 Electrical Specification
Testing Conformance:	Profibus Conformance Test Spec
Conformance To:	Current conformance test levels
Openness:	Open specification

Physical Characteristics:

Network Topology:	Multidrop Serial Bus
Physical Media:	RS485 Physical Specification

Transport Mechanism:

Communication Methods:	Bus master to poll slave devices distributed in multi-drop fashion on an RS485 serial bus
Baud Rates Supported:	Hardware up to 12MB
Typical Data Rates:	9.6K, 19.2K, 45.45K, 73.75K, 93.75K, 187.5K, 500K, 1.5M, 3M, 6M, 12M

Amount of Information Supported: Up to 244 bytes of input/output data per message

Number of Nodes Supported: Up to 126 stations may connect to the bus

Stations per Segment Supported: Up to 32 stations per bus segment

Board Specifications:

Data Rates Supported:	9.5K, 19.2K, 93.75K, 187.5K, 500K, 1.5M, 5M, 12M
Mode :	The module has auto baud rate detection
Consumption:	370mA at 5V supplied through the drive

Mechanical:

Dimensions:	6mm (0.5 in) height x 86mm (3.33 in) length x 78.5mm (3.09 in) width
Weight:	57g (2 oz)

Environmental:

Operating Temperature:	-10°C to +50°C (+14°F to +149°F)
Storage Temperature:	-40°C to +85°C (-40°F to +185°F)
Relative Humidity:	5% to 95% (non-condensing)

Appendix B
Configuration Examples

Use of Profibus through an SST Module in CLX Chassis
Using Logix5563 Processor in Slot 0 w_SST_PFB_CLX in Slot 6

Configuration Tool requires the following versions of S/W: Through Ethernet, the SST PROFIBUS Configuration Tool can communicate with an SST-PFB-CLX-RLL scanner using firmware version 4.09 or higher, and Configuration Tool version 3.0 or higher. This communication uses RSLinx driver version 2.2 OEM/Professional or higher.

FW ver. 4.09 or higher, Config Tool ver. 3.0 or higher.
RSLinx driver version 2.2 OEM/Professional or higher

Our Config
FW Ver 6.07 (was 5.1), Config Tool Ver 3.1.0.1.0.,
RSLinx Ver. 2.52.00.17 (CPR 9)

Figure 1

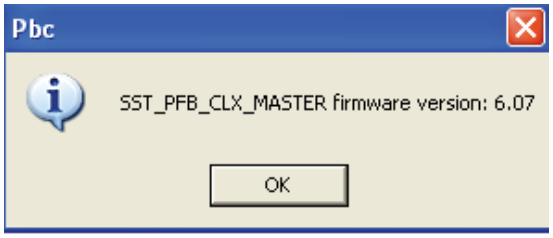

Figure 2

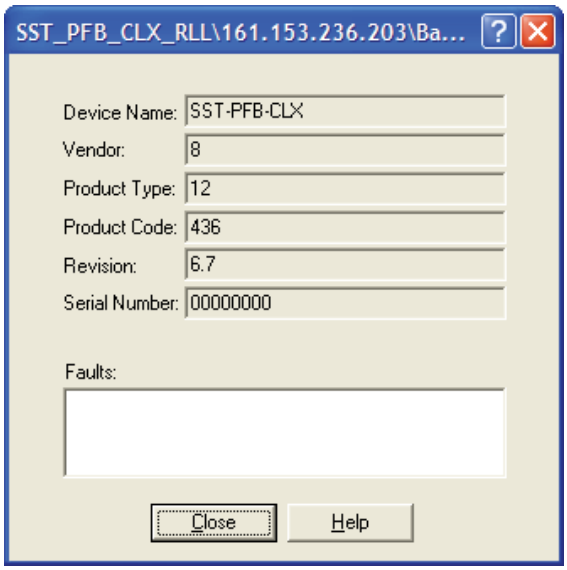

Figure 3

The Network must be configured first by specifying the following:
Card Name: Specify which card to use.
Or Serial: Applies only to SST-PFB-PLC5, SST-PFB-SLC and SST-PFB-CLX master scanners.

Select the COM port your serial cable is connected to.
Or RSLinx: Applies only to the SST-PFB-CLX master scanner.

- Specify the Driver Name that is the name of the RSLinx driver to use to communicate with the SST-PFB-CLX.

- Enter the Slot Number that is the location of the SST-PFB-CLX in the CLX rack.

- Specify the RSLinx Path if the SST-PFB-CLX is in a remote rack

See also: RSLinx communication

Baud Rate: Specify Baud Rate (Slaves that don't support selected baud rate will NOT be detected).
Station: Set a unique station number, one not used by any of the slaves on the network.

Copyright, 2006 Woodhead Software & Electronics

Figure 4

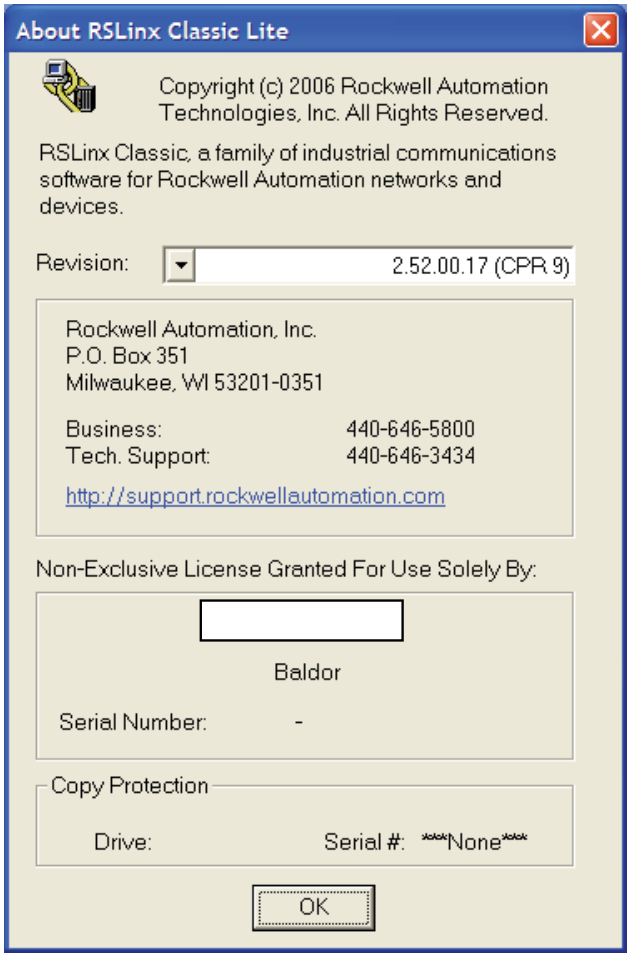
About RSLinx Classic Lite
Copyright (c) 2006 Rockwell Automation Technologies, Inc. All Rights Reserved.
RSLinx Classic, a family of industrial communications software for Rockwell Automation networks and devices.
Revision:
2.52.00.17 (CPR 9)
Rockwell Automation, Inc.
P.O. Box 351
Milwaukee, WI 53201-0351
Business: 440-646-5800
Tech. Support: 440-646-3434
http://support.rockwellautomation.com
Non-Exclusive License Granted For Use Solely By:
Baldor
Serial Number: -
Copy Protection
Drive:
Serial #: ***None***
OK

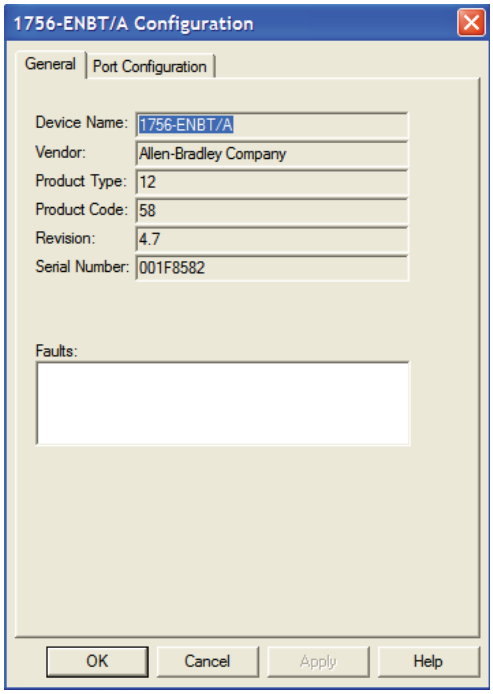
1756-ENBT/A Configuration
General
Port Configuration
Device Name: 1756-ENBT/A
Vendor: Allen-Bradley Company
Product Type: 12
Product Code: 58
Revision: 4.7
Serial Number: 001F8582
Faults:
OK
Cancel
Apply
Help

Master - Station 01

Drive Slave Address 03 EXBHH014A01 F/W 1.23

16 Words In 16 Words Out

Figure 5

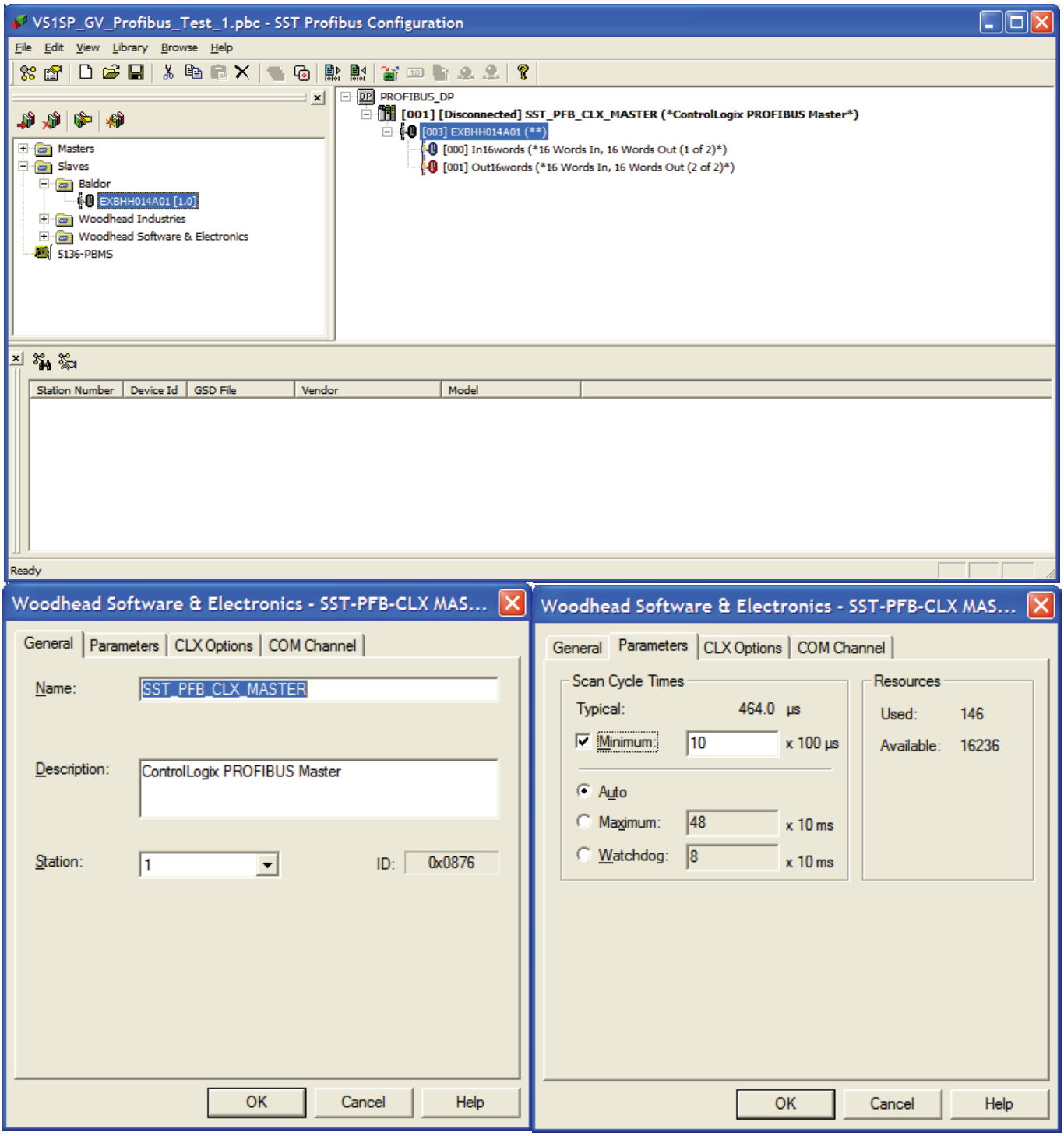

Figure 6

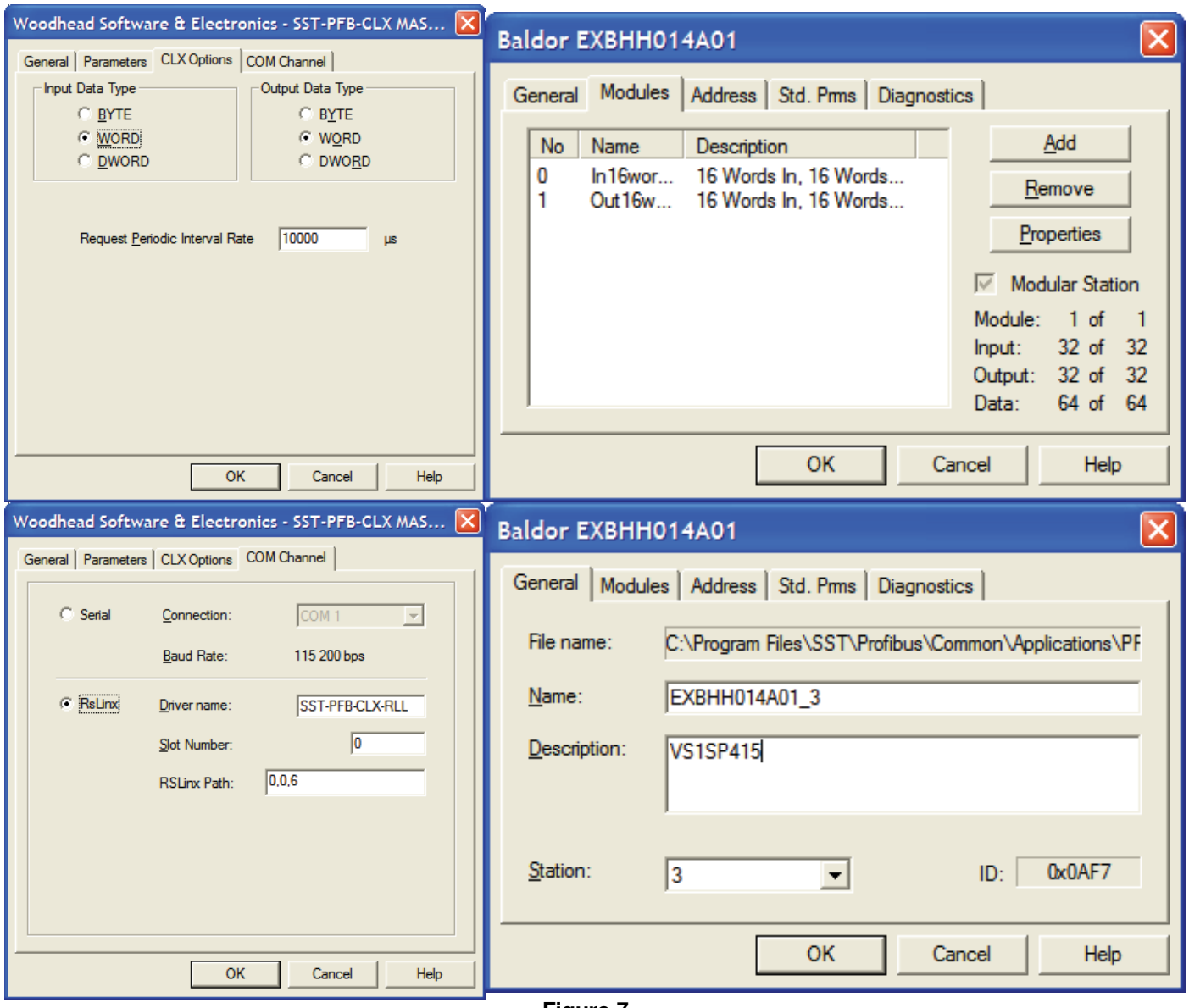

Figure 7

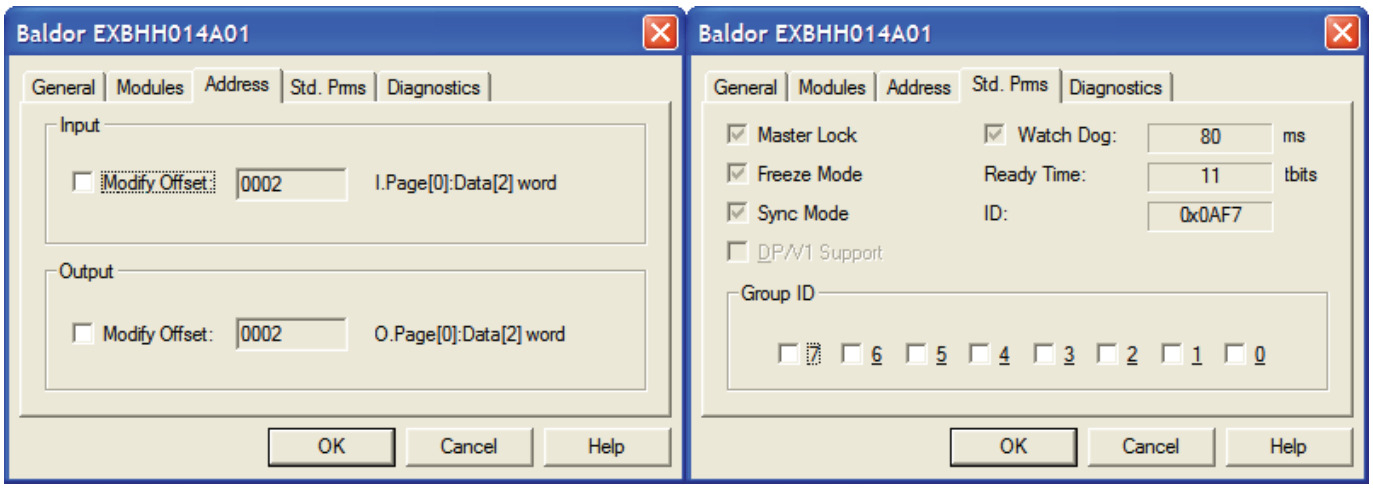

Figure 8

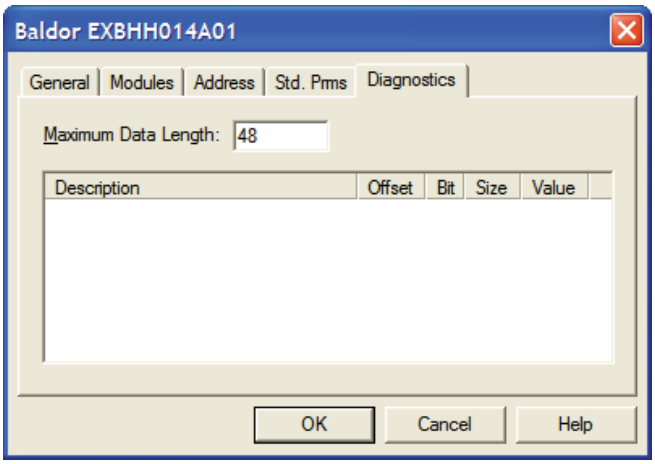

Figure 9

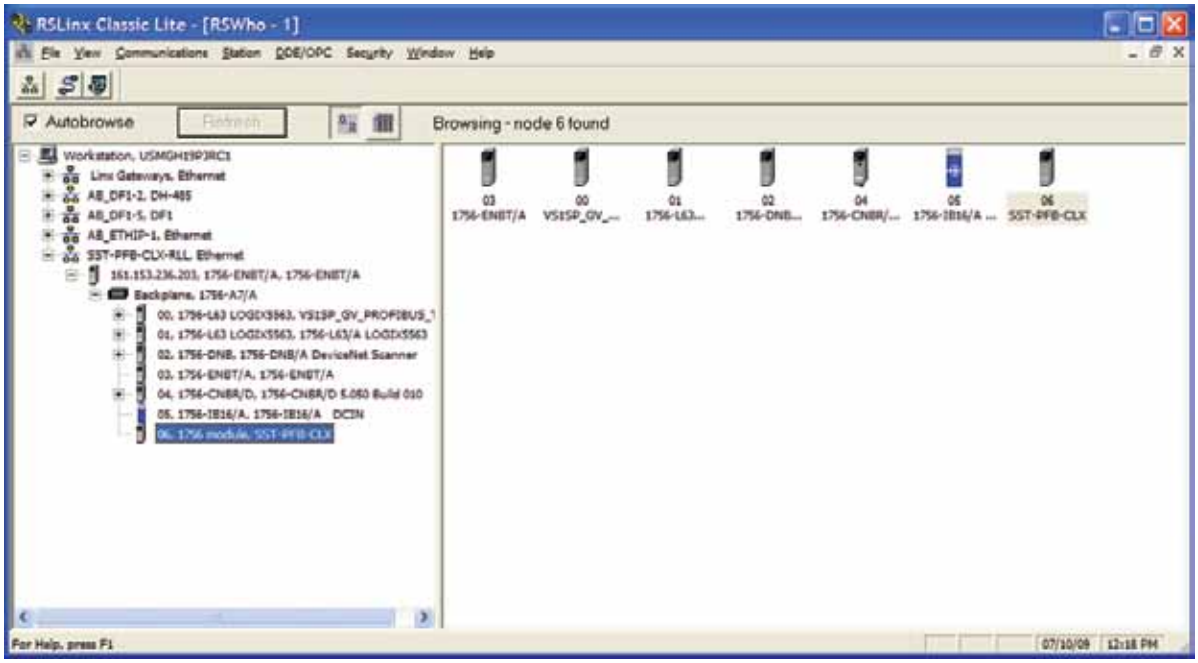

Figure 10

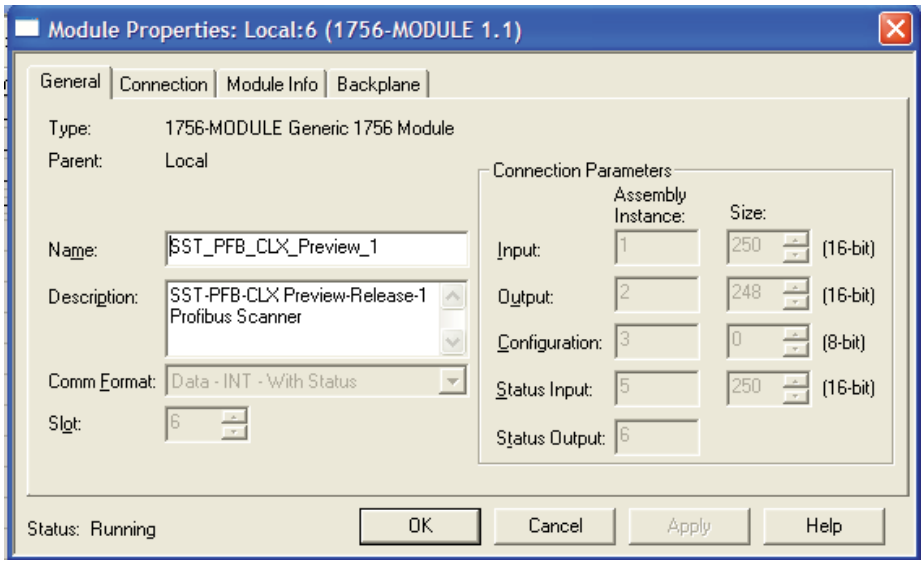

Input Assembly Instance	1	Size	250
Output Assembly Instance	2	Size	248

Configuration Assembly Instance	3	Size	0
Status Input Assembly Instance	5	Size	250
Status Output Assembly Instance	6		

Figure 11

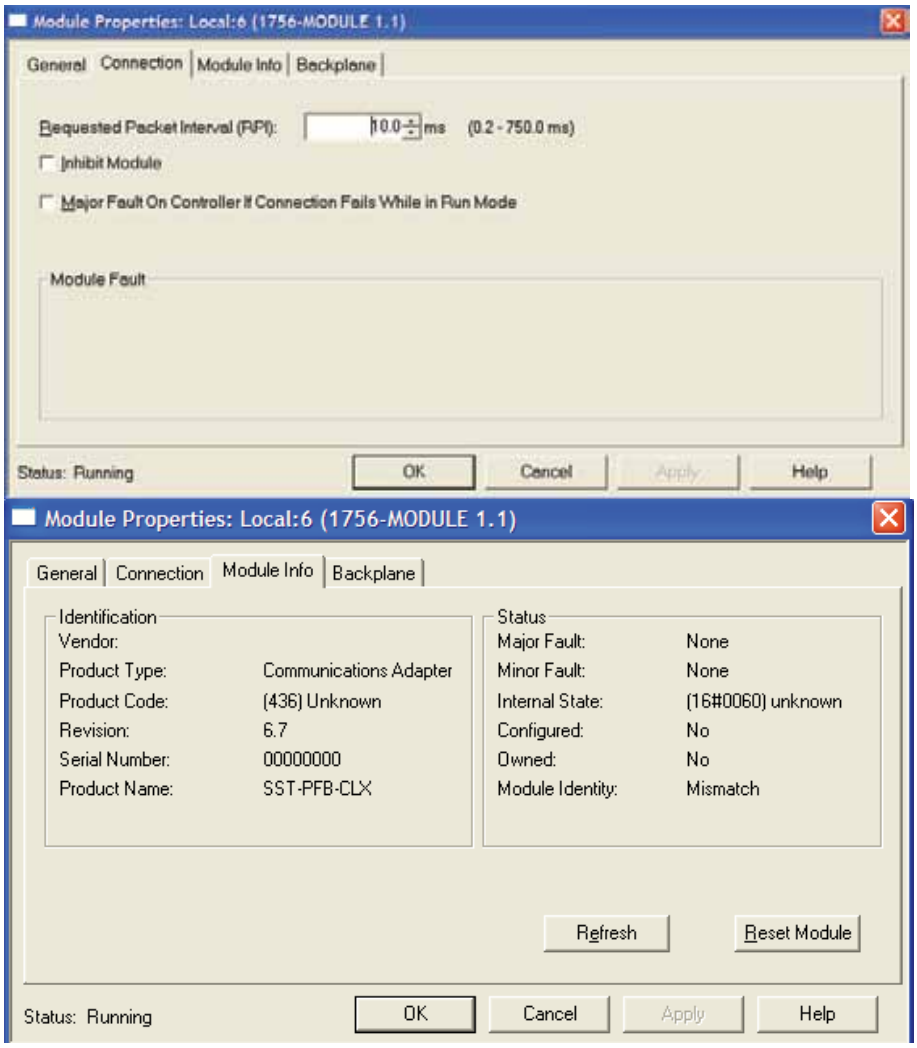

Figure 12

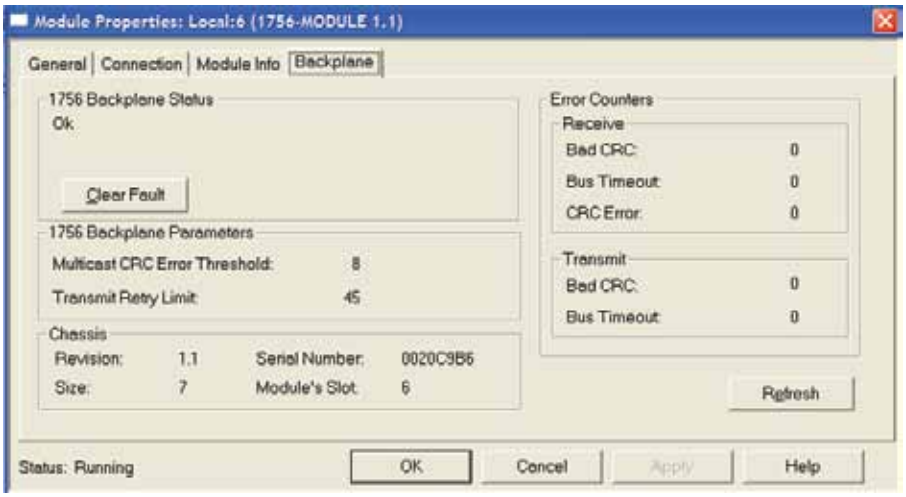

11. Select Next >. The corresponding Modules Properties window displays.
12. Set the Requested Packet Interval (RPI) accordingly. The RPI value must not be any lower than 2 times the estimated PROFIBUS typical scan time, and should not be set toless than 3ms. For example, if your PROFIBUS typical scan time is 1.5ms (@12MB), then you must use 3ms or higher for the RPI value.

The estimated PROFIBUS typical scan time can be generated by the Configuration Tool once the PFB network has been created. To find the typical scan time, right-click on the CLX Master in the Tool and select Properties. Next, click the Parameters tab. The typical cycle time displays in microseconds in the upper-left corner. Refer to Section 5.2, Creating an I/O Configuration, for more information on using the Configuration Tool.

Example: Our Scanner shows 464.0 usec Scan Cycle Times

Figure 13

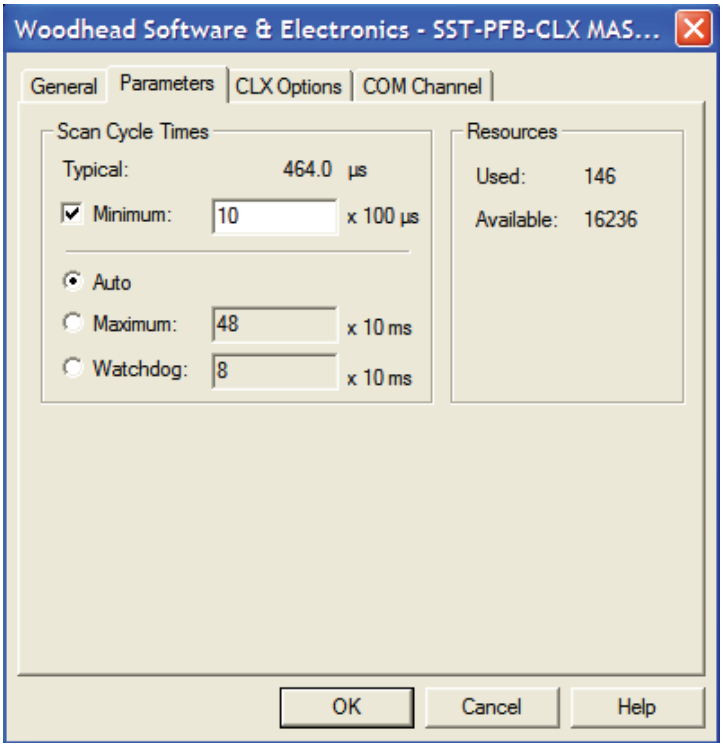

Profibus

A GSD file (Generic Station Description), which is provided by the device manufacturer, contains a description of the PROFIBUS DP/PA device. GSD files provide a way for an open configuration tool to automatically get the device characteristics.

Sample Programming utilizing CLogix and an SST Profibus Scanner

For Input Words 0 through 15 Offset Address starting at 21 through 36

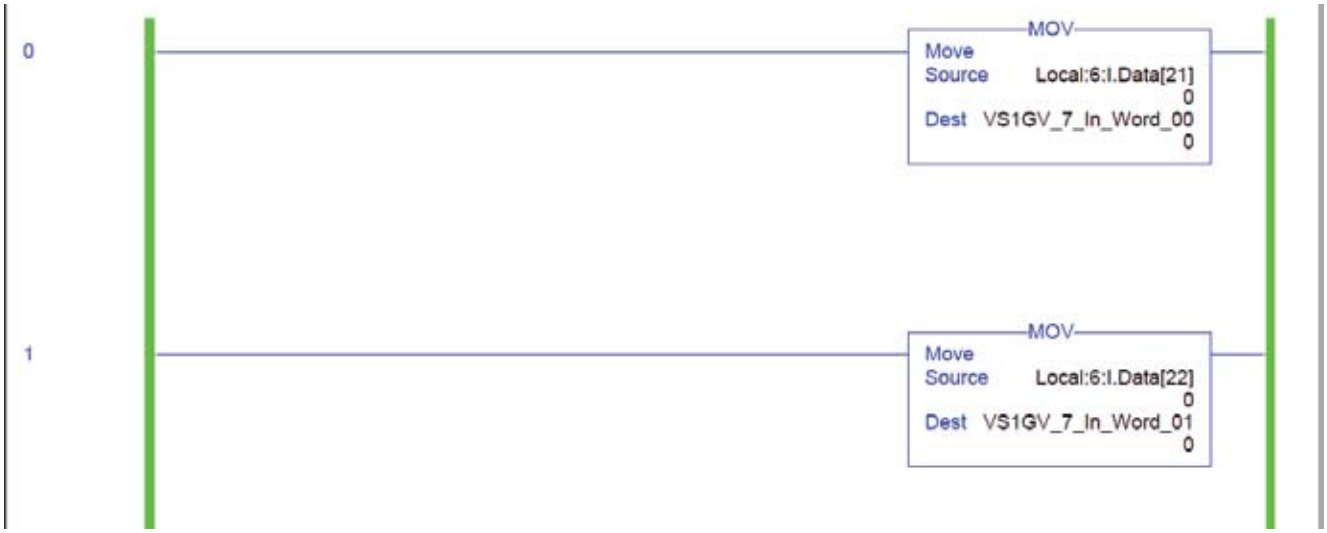

Through to,

And Output Words 0 through 15 to Offset Addresses 20 through 35

Through to,

Digital and Relay Out Examples

Command Control Examples

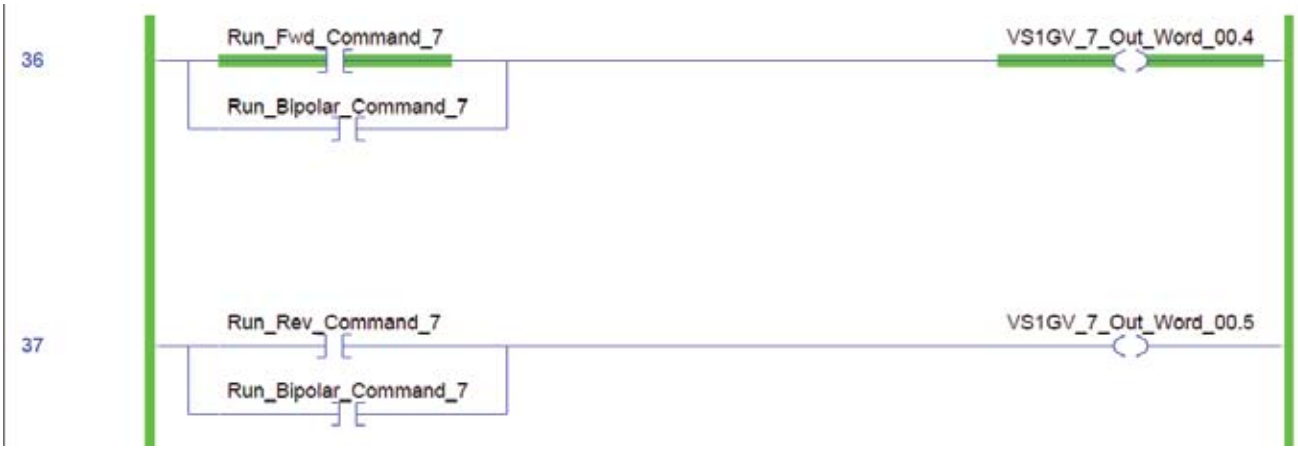

Control Examples

Parameter Read and Write Examples

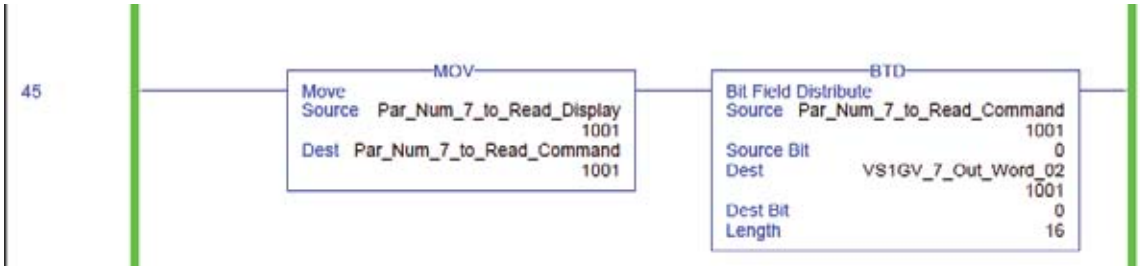

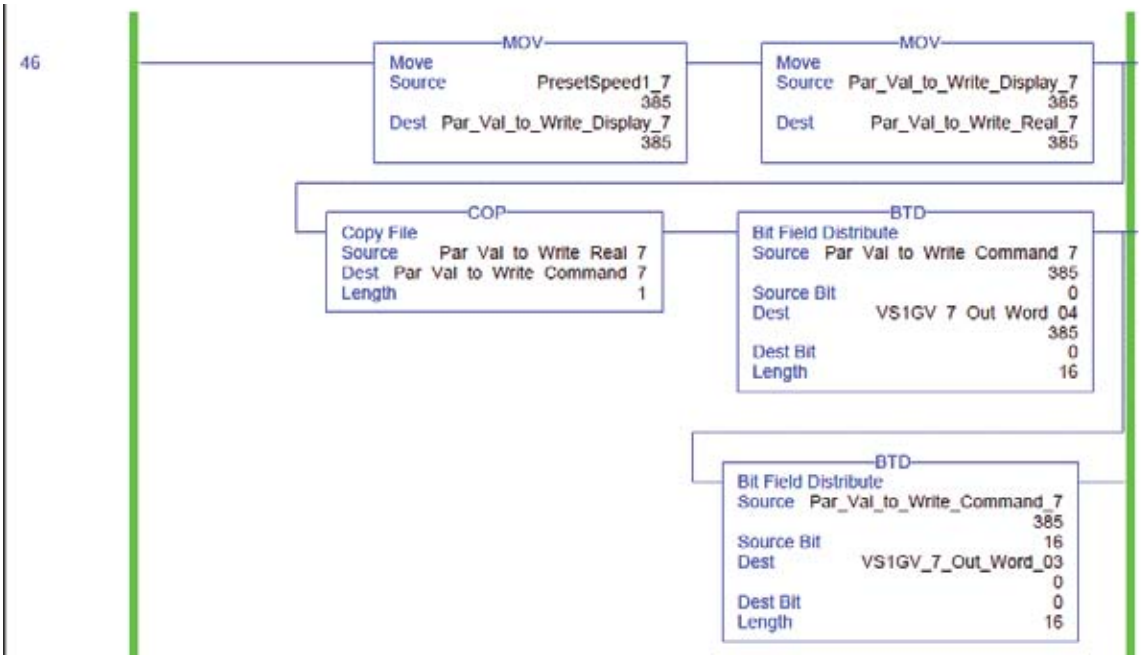

Floating Point Example

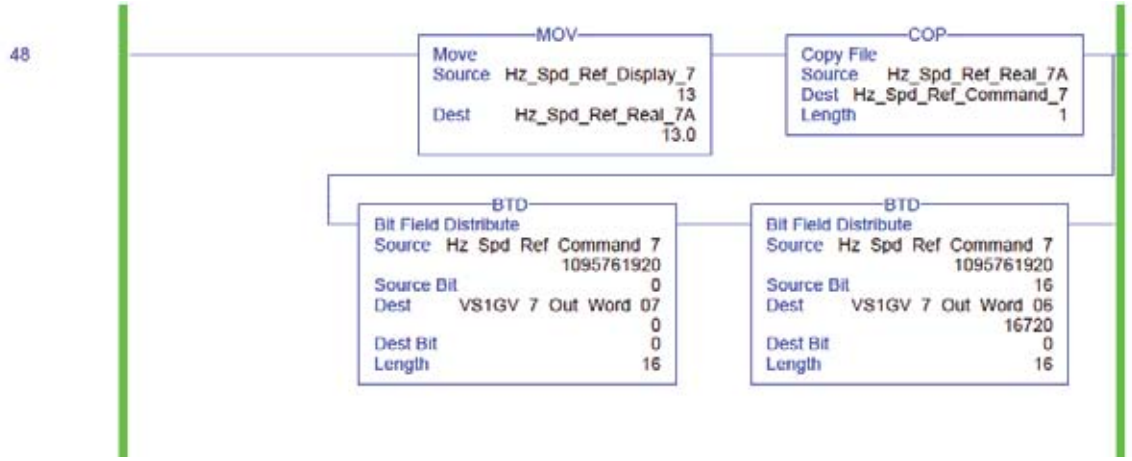

Input Bit Examples

Input Word Example

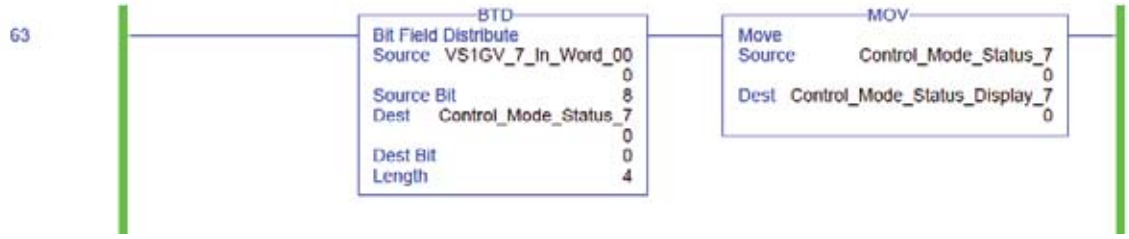

32 Bit Input Word from 16 Bit Words Example

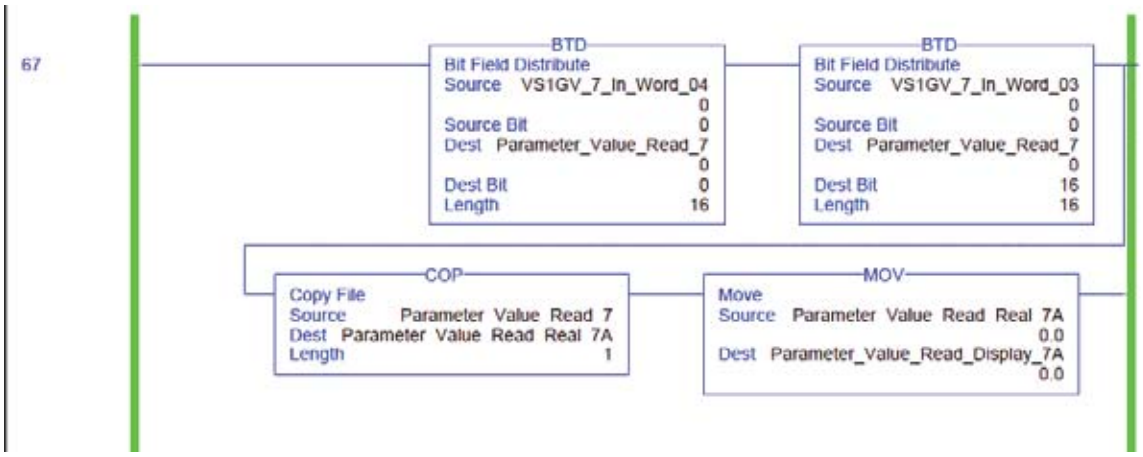

Drive Input Word Status Example

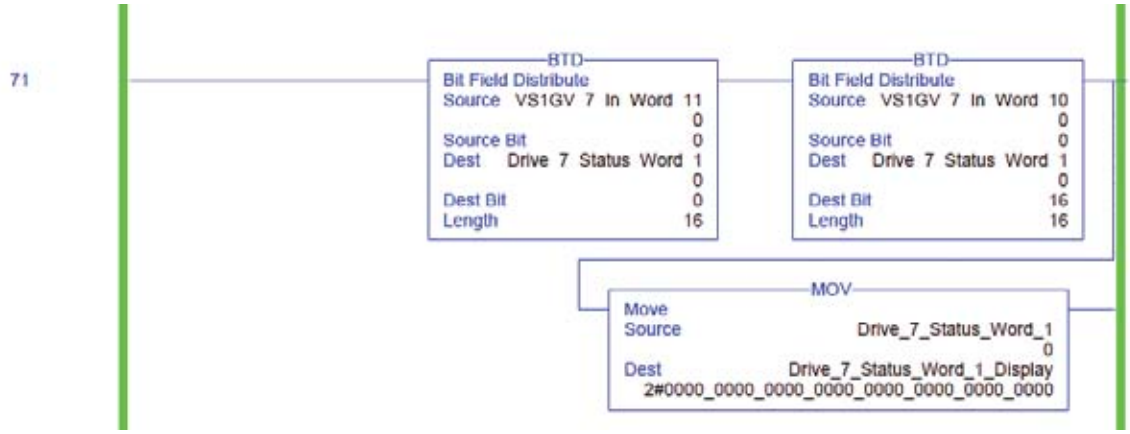

Digital Input Status Word Example

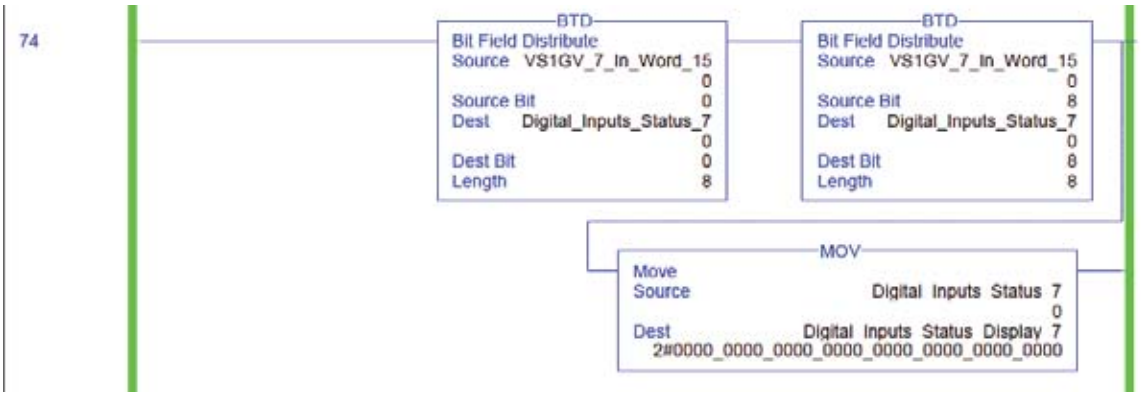

Coding Examples from the SST Users manual

Figure 20: Write Multiple Output Tables Ladder Sample

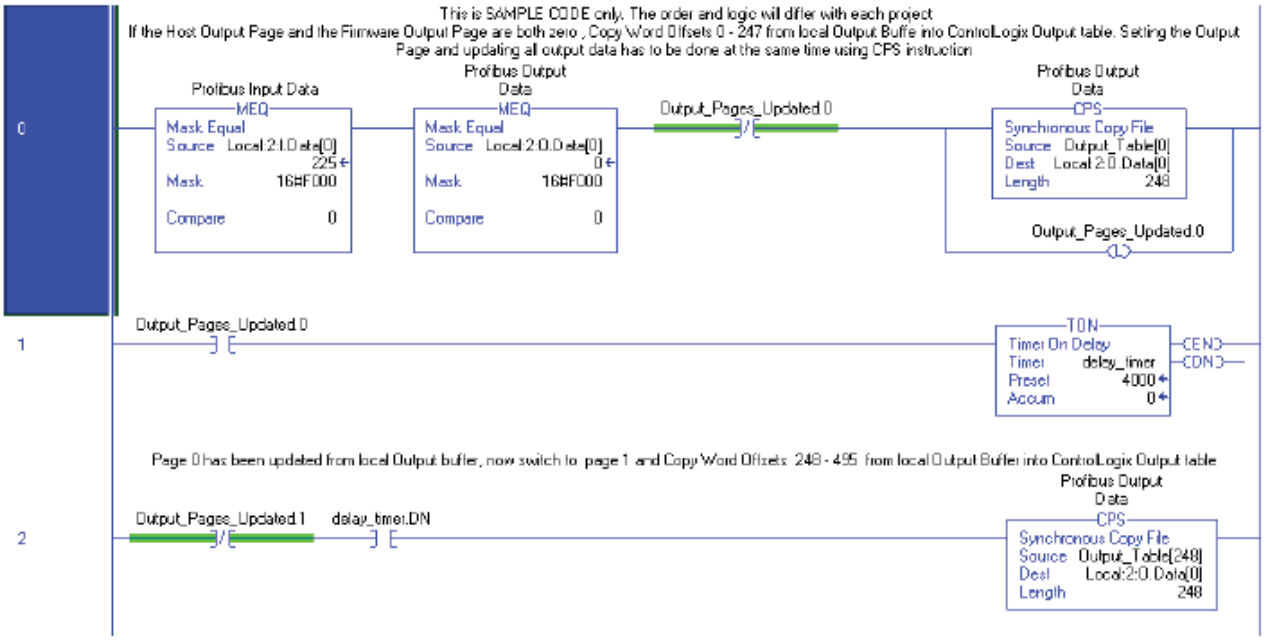

13.3 I/O Expansion Ladder Samples

Figure 19: Read Multiple Input Tables Ladder Sample

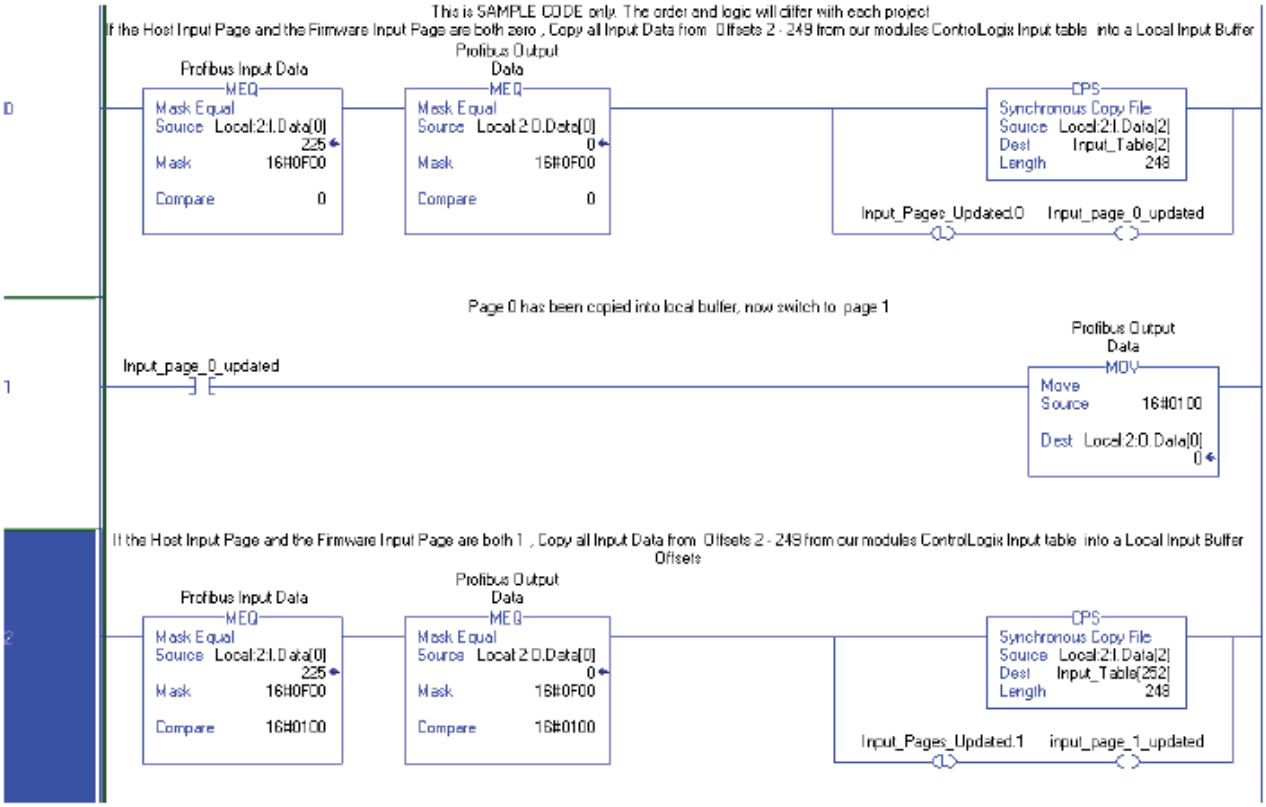

Appendix D

32 Bit Float Use and Display Considerations

The results of Resolution for Speed reference is different depending upon The motor being used (Speed Ratio) the Mode of Control, i.e HZ vs RPM as in the type of control, i.e V/HZ (V/Freq) vs. Sensorless Vector, vs Vector (w/Encoder Feedback).

Control is best with a 1000/1 Motor with Vector as you can achieve 0.001 Speed Ratio (I.e 1.75 RPM at 1750 RPM Motor) .01 in Sensorless Vector I believe the best accuracy is 17.5 RPM at 1750RPM and Open Loop is .1 or 175 Rpm on a 1750 Motor. Display of the results on the Drive Keypad differ from what can be displayed elsewhere as the numerical resolution can exist to many decimal places, yet the ability to display the resolution is limited to it's (the Display units) design.

For VS1 H2 Style Drives

In this example the displayed values at the VS1GV Keypad cannot be seen as a 2 digit Decimal value, i.e 135.53.

The Display is limited in what it can display. It has 5 digits to display, and one of them is used as the decimal point so if you send a 58.35 you can see that If you send a 583.55 you will see 583.5 if you send 1583.55 you will see 1583. The display limitation is in the physics of the display.

With the Drive set to Sensorless Vector or Vector you can set the Drive Speed Units in RPM (P2101)

Level 3 Custom Units to (P3201) Max Decimal Places to 2, (P3202) Set to 1.00 at 1 RPM

Check the "Custom display screen" display.

To send Floating Point Data the 32-bit field must represent the desired speed using IEE754 32-bit format. The following is information was gathered from WIKIPEDIA

The IEEE Standard for Floating-Point Arithmetic (IEEE 754) is the most widely-used standard for floating-point computation, and is followed by many hardware (CPU and FPU) and software implementations. Many computer languages allow or require that some or all arithmetic be carried out using IEEE 754 formats and operations. The current version is IEEE 754-2008, which was published in August 2008; it includes nearly all of the original IEEE 754-1985 (which was published in 1985) and the IEEE Standard for Radix-Independent Floating-Point Arithmetic (IEEE 854-1987).

The standard defines:
- arithmetic formats: sets of binary and decimal floating-point data, which consist of finite numbers (including signed zeros and subnormal numbers), infinities, and special 'not a number' values (NaNs)
- interchange formats: encodings (bit strings) that may be used to exchange floating-point data in an efficient and compact form
- rounding algorithms: methods to be used for rounding numbers during arithmetic and conversions
- operations: arithmetic and other operations on arithmetic formats
- exception handling: indications of exceptional conditions (such as division by zero, overflow, etc.)

The standard also includes extensive recommendations for advanced exception handling, additional operations (such as trigonometric functions), expression evaluation, and for achieving reproducible results.

Basic Formats

The standard defines five basic formats, named using their base and the number of bits used to encode them. A conforming implementation must fully implement at least one of the basic formats. There are three binary floating-point basic formats (which can be encoded using 32, 64 or 128 bits) and two decimal floating-point basic formats (which can be encoded using 64 or 128 bits). The binary32 and binary64 formats are the single and double formats of IEEE 754-1985.

The precision of the binary formats is one greater than the width of its significand, because there is an implied (hidden) 1 bit.

Name	Common name	Base	Digits	E min	E max	Notes	Decimal digits	Decimal E max
binary16	Half precision	2	10+1	-14	+15	storage, not basic	3.31	4.51
binary32	Single precision	2	23+1	-126	+127		7.22	38.23
binary64	Double precision	2	52+1	-1022	+1023		15.95	307.95
binary128	Quadruple precision	2	112+1	-16382	+16383		34.02	4931.77
decimal32		10	7	-95	+96	storage, not basic	7	96
decimal64		10	16	-383	+384		16	384
decimal128		10	34	-6143	+6144		34	6144

Decimal digits is $\log_{10} base^{digits}$, this gives the precision in decimal.

Decimal E max is $Emax \times \log_{10} base$, this gives the maximum exponent in decimal.

All the basic formats are available in both hardware and software implementations.

Interchange Formats

Interchange formats are intended for the exchange of floating-point data using a fixed-length bit-string for a given format. For the exchange of binary floating-point numbers, interchange formats of length 16 bits, 32 bits, 64 bits, and any multiple of 32 bits ≥128 are defined. The 16-bit format is intended for the exchange or storage of small numbers (e.g., for graphics). The encoding scheme for these binary interchange formats is the same as that of IEEE 754-1985: a sign bit, followed by w exponent bits that describe the exponent offset by a bias, and p–1 bits that describe the significand. The width of the exponent field for a k-bit format is computed as w = floor(4 log2(k))–13. The existing 64- and 128-bit formats follow this rule, but the 16- and 32-bit formats have more exponent bits (5 and 8) than this formula would provide (3 and 7, respectively). As with IEEE 754-1985, there is some flexibility in the encoding of signaling NaNs.
For the exchange of decimal floating-point numbers, interchange formats of any multiple of 32 bits are defined.

The encoding scheme for the decimal interchange formats similarly encodes the sign, exponent, and significand, but uses a more complex approach to allow the significand to be encoded as a compressed sequence of decimal digits (using Densely Packed Decimal) or as a binary integer. In either case the set of numbers (combinations of sign, significand, and exponent) that may be encoded is identical, and signaling NaNs have a unique encoding (and the same set of possible payloads). The original binary value will be preserved by converting to decimal and back again using:

5 decimal digits for binary16
9 decimal digits for binary32
17 decimal digits for binary64
36 decimal digits for binary128

The decimal representation will be preserved using:

7 decimal digits for decimal32
16 decimal digits for decimal64
34 decimal digits for decimal128

What this means is that you must convert Integers with Decimal data to the IEEE 754 format and this is
A Hexidecimal or Decimal equivalent representation of the number you seek to send. We are concerned with

decimal32	10	7	-95	+96	storage, not basic	7	96	Only.

Examples Follow:

Hz Speed Reference
The Hz Speed Reference field of the Output Data is the Speed Reference of the drive in Network Mode. It has a range of 0.00 to 500.00 Hz. When the value of this component changes, it is converted to floating-point and written to Drive Holding Registers 40013-14. If the data format parameter is set to Floating point, then the 32-bit field must represent the desired speed using IEE754 32-bit format. If the data format is set to either 16-bit or 32-bit integer, then the desired speed must be sent using a scale factor of 100. (e.g. 5823 = 58.23 Hz).

RPM Speed Reference
The RPM Speed Reference field of the Output Data is the Speed Reference of the drive in Network Mode, It has a range of 0.00 to 30000.00RPM. Whenever the value of this component changes, it is converted to floating-point and written to Drive Holding Registers 40015-16. If the data format parameter is set to Floating point, then the 32-bit field must represent the desired speed using IEE754 32-bit format. If the data format is set to either 16-bit or 32-bit integer, then the desired speed must be sent using a scale factor of 100. (e.g. 5823 = 58.23 Hz) There is no scaling in integer (units are in whole RPM's).

Current Limit
The Current Limit field of the Output Data is the Current Limit of the Drive in Network Mode. It has a range of 0.00 to 100.00%. Whenever the value of this component changes, it is converted to floating-point and written to Drive Holding Registers 40029-30. (only valid in Network Current Limiting Mode.) If the data format parameter is set to Floating point, then the 32-bit field must represent the desired speed using IEE754 32-bit format. If the data format is set to either 16-bit or 32-bit integer, then the desired speed must be sent using a scale factor of 100. (e.g. 5823 = 58.23 Amps).

Let's say you wish to send 1435.83 RPM to the Drive, you must use an IEEE 754 Converter (which can be found on the Internet
At various locations (i.e http://babbage.cs.qc.edu/IEEE-754/)

Results:

Decimal Value Entered: 1435.83

Single precision (32 bits):

Binary: *Status:* normal

Bit 31 Sign Bit	Bits 30 - 23 Exponent Field	Bits 22 - 0 Significand
0	10001001	1 .01100110111101010001111
0: + 1: -	Decimal value of exponent field and exponent	Decimal value of the significand
	137 - 127 = 10	1.4021777

Hexadecimal: 44B3 7A8F *Decimal:* 1435.8300

Decimal Value to be entered 1435.83

Hex 44B3 7A8F IF Hex is CONVERTED TO DECIMAL INDIVIDUALLY (17587) (31375) as 2 Individual Words

(1152613007) IF Hex is CONVERTED TO DECIMAL AS A WHOLE
Correct translation only occurs with conversion as a whole when done as a single word….

IEEE format for Floating Point

+/-	Exponent							
31	30	29	28	27	26	25	24	23

0 or 1 Number -127 to allow negatives

Mantisa																						
22	21	20	19	18	17	16	15	14	13	12	11	10	9	8	7	6	5	4	3	2	1	0

First Bit is always assumed to be 1 - Field is 23 Bit for Short Real Numbers

Baldor District Offices

UNITED STATES

ARIZONA
PHOENIX
4211 S 43RD PLACE
PHOENIX, AZ 85040
PHONE: 602-470-0407
FAX: 602-470-0464

ARKANSAS
CLARKSVILLE
1001 COLLEGE AVENUE
CLARKSVILLE, AR 72830
PHONE: 479-754-9108
FAX: 479-754-9205

CALIFORNIA
LOS ANGELES
6480 FLOTILLA STREET
COMMERCE, CA 90040
PHONE: 323-724-6771
FAX: 323-721-5859

HAYWARD
21056 FORBES AVENUE
HAYWARD, CA 94545
PHONE: 510-785-9900
FAX: 510-785-9910

COLORADO
DENVER
3855 FOREST STREET
DENVER, CO 80207
PHONE: 303-623-0127
FAX: 303-595-3772

CONNECTICUT
WALLINGFORD
65 SOUTH TURNPIKE ROAD
WALLINGFORD, CT 06492
PHONE: 203-269-1354
FAX: 203-269-5485

FLORIDA
TAMPA/PUERTO RICO/ VIRGIN ISLANDS
3906 EAST 11TH AVENUE
TAMPA, FL 33605
PHONE: 813-248-5078
FAX: 813-247-2984

GEORGIA
ATLANTA
62 TECHNOLOGY DRIVE
ALPHARETTA, GA 30005
PHONE: 770-772-7000
FAX: 770-772-7200

ILLINOIS
CHICAGO
340 REMINGTON BLVD.
BOLINGBROOK, IL 60440
PHONE: 630-296-1400
FAX: 630-226-9420

INDIANA
INDIANAPOLIS
5525 W. MINNESOTA STREET
INDIANAPOLIS, IN 46241
PHONE: 317-246-5100
FAX: 317-246-5110

IOWA
DES MOINES
1800 DIXON STREET, SUITE C
DES MOINES, IA 50316
PHONE: 515-263-6929
FAX: 515-263-6515

MARYLAND
BALTIMORE
6660 SANTA BARBARA RD.
SUITES 22-24
ELKRIDGE, MD 21075
PHONE: 410-579-2135
FAX: 410-579-2677

MASSACHUSETTS
BOSTON
6 PULLMAN STREET
WORCESTER, MA 01606
PHONE: 508-854-0708
FAX: 508-854-0291

MICHIGAN
DETROIT
5993 PROGRESS DRIVE
STERLING HEIGHTS, MI 48312
PHONE: 586-978-9800
FAX: 586-978-9969

MINNESOTA
MINNEAPOLIS
21080 134TH AVENUE NORTH
ROGERS, MN 55374
PHONE: 763-428-3633
FAX: 763-428-4551

MISSOURI
ST LOUIS
422 INDUSTRIAL DRIVE
MARYLAND HEIGHTS, MO 63043
PHONE: 314-298-1800
FAX: 314-298-7660

KANSAS CITY
1501 BEDFORD AVENUE
NORTH KANSAS CITY, MO 64116
PHONE: 816-587-0272
FAX: 816-587-3735

NEW YORK
AUBURN
ONE ELLIS DRIVE
AUBURN, NY 13021
PHONE: 315-255-3403
FAX: 315-253-9923

NORTH CAROLINA
GREENSBORO
1220 ROTHERWOOD ROAD
GREENSBORO, NC 27406
PHONE: 336-272-6104
FAX: 336-273-6628

OHIO
CINCINNATI
2929 CRESCENTVILLE ROAD
WEST CHESTER, OH 45069
PHONE: 513-771-2600
FAX: 513-772-2219

CLEVELAND
8929 FREEWAY DRIVE
MACEDONIA, OH 44056
PHONE: 330-468-4777
FAX: 330-468-4778

OKLAHOMA
TULSA
7170 S. BRADEN, SUITE 140
TULSA, OK 74136
PHONE: 918-366-9320
FAX: 918-366-9338

OREGON
PORTLAND
20393 SW AVERY COURT
TUALATIN, OR 97062
PHONE: 503-691-9010
FAX: 503-691-9012

PENNSYLVANIA
PHILADELPHIA
1035 THOMAS BUSCH
MEMORIAL HIGHWAY
PENNSAUKEN, NJ 08110
PHONE: 856-661-1442
FAX: 856-663-6363

PITTSBURGH
159 PROMINENCE DRIVE
NEW KENSINGTON, PA 15068
PHONE: 724-889-0092
FAX: 724-889-0094

TENNESSEE
MEMPHIS
4000 WINCHESTER ROAD
MEMPHIS, TN 38118
PHONE: 901-365-2020
FAX: 901-365-3914

TEXAS
DALLAS
2920 114TH STREET SUITE 100
GRAND PRAIRIE, TX 75050
PHONE: 214-634-7271
FAX: 214-634-8874

HOUSTON
10355 W. LITTLE YORK ROAD
SUITE 300
HOUSTON, TX 77041
PHONE: 281-977-6500
FAX: 281-977-6510

UTAH
SALT LAKE CITY
2230 SOUTH MAIN STREET
SALT LAKE CITY, UT 84115
PHONE: 801-832-0127
FAX: 801-832-8911

WISCONSIN
MILWAUKEE
1960 SOUTH CALHOUN ROAD
NEW BERLIN, WI 53151
PHONE: 262-784-5940
FAX: 262-784-1215

INTERNATIONAL SALES
FORT SMITH, AR
P.O. BOX 2400
FORT SMITH, AR 72902
PHONE: 479-646-4711
FAX: 479-648-5895

CANADA
EDMONTON, ALBERTA
4053-92 STREET
EDMONTON, ALBERTA T6E 6R8
PHONE: 780-434-4900
FAX: 780-438-2600

TORONTO
OAKVILLE, ONTARIO
2750 COVENTRY ROAD
OAKVILLE, ONTARIO L6H 6R1
PHONE: 905-829-3301
FAX: 905-829-3302

MONTREAL, QUEBEC
5155 J-ARMAND BOMBARDIER
SAINT-HUBERT, QUÉBEC
CANADA J3Z 1G4
PHONE: 514-933-2711
FAX: 514-933-8639

VANCOUVER, BRITISH COLUMBIA
1538 KEBET WAY
PORT COQUITLAM,
BRITISH COLUMBIA V3C 5M5
PHONE 604-421-2822
FAX: 604-421-3113

WINNIPEG, MANITOBA
54 PRINCESS STREET
WINNIPEG, MANITOBA R3B 1K2
PHONE: 204-942-5205
FAX: 204-956-4251

AUSTRALIA
UNIT 3, 6 STANTON ROAD
SEVEN HILLS, NSW 2147, AUSTRALIA
PHONE: (61) (2) 9674 5455
FAX: (61) (2) 9674 2495

UNIT 8, 5 KELLETTS ROAD
ROWVILLE, VICTORIA, 3178 AUSTRALIA
PHONE: (61) (3) 9753 4355
FAX: (61) (3) 9753 4366

EL SALVADOR
RESIDENCIAL PINARES DE SUIZA
POL. 15 #44,
NVA. SAN SALVADOR, EL SALVADOR
PHONE: +503 2288-1519
FAX: +503 2288-1518

CHILE
LUIS THAYER OJEDA 166,
OF 402 - PROVIDENCIA
SANTIAGO, CHILE
PHONE: +56 2 816 9900

CHINA
160 SONG SHENG ROAD
SONGJIANG INDUSTRY ZONE
SHANGHAI 201613, CHINA
PHONE: +86 21 5760 5335
FAX : +86 21 5760 5336

GERMANY
HERMANN-HEINRICH - GOSSEN 3
50858 KOLN, GERMANY
PHONE: 49-2234379410
FAX: 49-22343794164

DIESELSTRASSE 22
D-85551 KIRCHHEIM
MUNICH, GERMANY
PHONE: +49 89 90 5080
FAX: +49 89 90 50 8492

INDIA
14, COMMERCE AVENUE
MAHAGANESH COLONY
PAUD ROAD
PUNE - 411038
MAHARASHTRA, INDIA
PHONE: +91 20 25 45 27 17 / 18
FAX: +91 20 25 45 27 19

INDONESIA
TALAVERA OFFICE PARK,
28TH FLOOR, SUITE M18
Jl. T.B. SIMATUPANG, KAV. 22-26
JAKARTA 12430, INDONESIA
PHONE: +62 21 7599 9879
FAX: + 62 21 7599 9878

ITALY
VIA SOTTOBISIO 30
BALERNA CH-6828
PHONE: +41 91 683 6161
FAX: +41 91 630 2633

JAPAN
DIA BLDG 802,
2-21-1 TSURUYA-CHO,
KANAGAWA-KU
YOKOHAMA, 221-0835, JAPAN
PHONE: 81-45-412-4506
FAX: 81-45-412-4507

MEXICO
LEON, GUANAJUATO
KM. 2.0 BLVD. AEROPUERTO
LEÓN 37545, GUANAJUATO, MÉXICO
PHONE: +52 477 761 2030
FAX: +52 477 761 2010

MIDDLE EAST & NORTH AFRICA
VSE INTERNATIONAL CORP.
P. O. BOX 5618
BUFFALO GROVE, IL 60089-5618
PHONE: 847 590 5547
FAX: 847 590 5587

PANAMA
AVE. RICARDO J. ALFARO
EDIFICIO SUN TOWERS MALL
PISO 2, LOCAL 55
CIUDAD DE PANAMÁ, PANAMÁ
PHONE: +507 236-5155
FAX: +507 236-0591

SINGAPORE
18 KAKI BUKIT ROAD 3, #03-09
ENTREPRENEUR BUSINESS CENTRE
SINGAPORE 415978
PHONE: (65) 6744 2572
FAX: (65) 6747 1708

SWITZERLAND
POSTFACH 73
SCHUTZENSTRASSE 59
CH-8245 FEUERTHALEN
SWITZERLAND
PHONE: +41 52 647 4700
FAX: +41 52 659 2394

TAIWAN
1F, NO 126 WENSHAN 3RD STREET,
NANTUN DISTRICT,
TAICHUNG CITY 408
TAIWAN R.O.C
PHONE: (886) 4 238 04235
FAX: (886) 4 238 04463

UNITED KINGDOM
6 BRISTOL DISTRIBUTION PARK
HAWKLEY DRIVE
BRISTOL BS32 0BF U.K.
PHONE: +44 1454 850000
FAX: +44 1454 859001

VENEZUELA
AV. ROMA. QTA EL MILAGRO. URB.
CALIFORNIA NORTE
CARACAS, 1070
VENEZUELA
PHONE/FAX: +58 212 272 7343
MOBILE: +58 414 114 8623

758-1210

Baldor Electric Company
World Headquarters
P.O. Box 2400, Fort Smith, AR 72902-2400 U.S.A., Ph: (1) 479.646.4711, Fax (1) 479.648.5792, International Fax (1)479.648.5895
www.baldor.com

© Baldor Electric Company
MN758

All Rights Reserved. Printed in USA.
12/10