BALDOR®

A MEMBER OF THE ABB GROUP

High Resolution Analog Input / Output Expansion Board Catalog No. EXBHH005A01

03/12 Installation & Operating Manual MN754

Any trademarks used in this manual are the property of their respective owners.

Table of Contents

Chapter 1
Introduction
1.1 Getting Assistance from Baldor 1-1
1.2 Introduction 1-1
1.3 Safety Notice 1-2
1.4 Limited Warranty 1-4

Chapter 2
Expansion Board Description
2.1 Expansion Board Description 2-1
2.1.1 Features 2-1
2.1.2 Installation Considerations 2-1

Chapter 3
Installation
3.1 Installation 3-1
3.2 Receiving & Inspection 3-1
3.3 Board Installation 3-2
3.4 Jumper Definitions 3-4

Chapter 4
Software Setup
4.1 Overview 4-1
4.2 HI RES Parameters 4-2

Chapter 5

Troubleshooting

5.1 Overview 5-1
5.2 Diagnostic Screen 5-1
5.3 Installed Option Boards 5-1

Chapter 1
Introduction

The Baldor controls represent the latest technology in microprocessor based motor controls. In addition to the user programmable parameters available in every control, many different expansion boards are available from Baldor to further customize the control to most any application. Originally designed for the H2 controls, these same boards are compatible with our flagship products, the VS1SP, VS1GV, VS1SD, VS1CTD and VS1PM controls.

1.1 Getting Assistance from Baldor

For technical assistance, contact your local Baldor District Office. Before calling, please review the troubleshooting section of this manual and you will be asked for the drive model number or catalog number that is located on the Nameplate.

1.2 Introduction

Table 1-1 lists the available optional expansion boards for the VS1SP, VS1GV, VS1SD, VS1CTD and VS1PM drives.

Table 1-1 VS1 Expansion Boards

Board Name	Catalog No.	Manual No.
Ethernet Server Expansion Board	EXBHH001AXX	MN751
Isolated Input Expansion Board	EXBHH003AXX	MN753
High Resolution Analog Board	EXBHH005AXX	MN754
Master Pulse Reference/isolated Pulse Follower	EXBHH007AXX	MN755
DeviceNet / EtherNet/IP / Modbus TCP/IP Expansion Board	EXBHH013AXX	MN756
BAC ne t/ IP / EtherNet / IP / Modbus TCP Communications Expansion Board	EXBHH019	MN757
PROFIBUS DP Expansion Board	EXBHH014AXX	MN758
LonWorks Communications Expansion Board	EXBHH016AXX	MN759

1.3 Safety Notice

This equipment contains voltages that may be as high as 1000 volts! Electrical shock can cause serious or fatal injury. Only qualified personnel should attempt the start-up procedure or troubleshoot this equipment.
This equipment may be connected to other machines that have rotating parts or parts that are driven by this equipment. Improper use can cause serious or fatal injury. Only qualified personnel should attempt the start-up procedure or troubleshoot this equipment.

CLASSIFICATIONS OF CAUTIONARY STATEMENTS

WARNING: Indicates a potentially hazardous situation which, if not avoided, could result in injury or death.

CAUTION: Indicates a potentially hazardous situation which, if not avoided, could result in damage to property.

PRECAUTIONS

WARNING: Do not touch any circuit board, power device or electrical connection before you first ensure that power has been disconnected and there is no high voltage present from this equipment or other equipment to which it is connected. Electrical shock can cause serious or fatal injury. Only qualified personnel should attempt the start-up procedure or troubleshoot this equipment.

WARNING: Be sure that you are completely familiar with the safe operation of this equipment. This equipment may be connected to other machines that have rotating parts or parts that are controlled by this equipment. Improper use can cause serious or fatal injury. Only qualified personnel should attempt the start-up procedure or troubleshoot this equipment.

WARNING: Be sure the system is properly grounded before applying power. Do not apply AC power before you ensure that all grounding instructions have been followed. Electrical shock can cause serious or fatal injury.

WARNING: Do not remove cover for at least five (5) minutes after AC power is disconnected to allow capacitors to discharge. Dangerous voltages are present inside the equipment. Electrical shock can cause serious or fatal injury.

WARNING: Improper operation of control may cause violent motion of the motor shaft and driven equipment. Be certain that unexpected motor shaft movement will not cause injury to personnel or damage to equipment. Peak torque of several times the rated motor torque can occur during control failure.

WARNING: Motor circuit may have high voltage present whenever AC power is applied, even when motor is not rotating. Electrical shock can cause serious or fatal injury.

WARNING: MEDICAL DEVICE/PACEMAKER DANGER - Magnetic and electromagnetic fields in the vicinity of current carrying conductors and industrial motors can result in a serious health hazard to persons with cardiac pacemakers, internal cardiac defibrillators, neurostimulators, metal implants, cochlear implants, hearing aids, and other medical devices. To avoid risk, stay away from the area surrounding a motor and its current carrying conductors.

CAUTION: To prevent equipment damage, be certain that the electrical service is not capable of delivering more than the maximum line short circuit current amperes listed in the appropriate control manual, 240 VAC, 480 VAC or 600 VAC maximum per control rating.

CAUTION: Before you proceed, be sure to read and become familiar with the safety precautions at the beginning of this manual. If you have any questions, seek expert advise before you proceed. Do not proceed if you are unsure of the safety precautions or any procedure.

CAUTION: Be sure all packing materials are removed from the board. Conductive foam may be present on the connectors to prevent static build up during shipping. This can prevent proper circuit operation.

CAUTION: Static electricity damages electrical components. This board has static sensitive components installed. Be sure to comply with ESD (Electro Static Discharge) procedures when handling circuit boards and components.

1.4 Limited Warranty

For a period of two (2) years from the date of original purchase, BALDOR will repair or replace without charge controls and accessories which our examination proves to be defective in material or workmanship. This warranty is valid if the unit has not been tampered with by unauthorized persons, misused, abused, or improperly installed and has been used in accordance with the instructions and/or ratings supplied. This warranty is in lieu of any other warranty or guarantee expressed or implied. BALDOR shall not be held responsible for any expense (including installation and removal), inconvenience, or consequential damage, including injury to any person or property caused by items of our manufacture or sale. (Some states do not allow exclusion or limitation of incidental or consequential damages, so the above exclusion may not apply.) In any event, BALDOR's total liability, under all circumstances, shall not exceed the full purchase price of the control.

Claims for purchase price refunds, repairs, or replacements must be referred to BALDOR with all pertinent data as to the defect, the date purchased, the task performed by the control, and the problem encountered. No liability is assumed for expendable items such as fuses.

Goods may be returned only with written notification including a BALDOR Return Authorization Number and any return shipments must be prepaid.

Chapter 2

Expansion Board Description

2.1 Expansion Board Description

High Resolution Analog Expansion Board
Catalog No. EXBHH005AXX

When this board is installed, two high resolution analog inputs are provided in addition to the two standard analog outputs.

2.1.1 Features:

Two (2) Analog Inputs
Two (2) Analog Outputs
16 Bit Digital Resolution

The Analog I/O expansion board provides two high resolution analog inputs to the motor control board and two high resolution outputs from the motor control board. Each input and output may be configured for 0-5VDC, ±5VDC, 0-10VDC, ±10VDC, 0-20mA or 4-20mA.
Each analog input and output may be independently configured to a voltage or current.
Table 2-1 identifies the characteristics of the High Resolution Analog Input/Output Expansion Board.
Table 2-2 specifies the signal resolutions for each type of input and output signal.
Figure 3-3 and 3-4 identify the internal configuration and external connections for the analog input and output signals.

2.1.2 Installation Considerations

Two expansion board slots are available in the control.
When this board is installed, there are a total of four (4) analog inputs and four (4) analog outputs. The parameters used depend on the slot into which the expansion board is installed.
If a High Resolution Analog expansion board is:
installed in Slot 1, OP1 ANA IN1 & 2 etc. are active.
installed in Slot 2, OP2 ANA IN1 & 2 etc. are active.
Note: Slot 3 is reserved for a feedback board only.

Table 2-1 Characteristics

High Resolution Inputs	Number of Inputs	Two
	Input Signal Levels	±5VDC, ±10VDC, 0-20mA or 4-20mA
	Maximum Digital Resolution	16 bits
High Resolution Outputs	Number of Outputs	Two
	Output Signal Levels	0-5VDC, ±5VDC, 0-10VDC, ±10VDC, 0-20mA or 4-20mA
	Maximum Digital Resolution	16 bits

Table 2-2 Signal Resolution

Input Signal	Signal Type	Digital Resolution	Analog Resolution
High Resolution Inputs			
±10VDC	Voltage	16 Bits (65636 Parts)	305 µVDC (0.000305 VDC)
±5VDC	Voltage	15 Bits (65636 Parts)	305 µVDC (0.000305 VDC)
4-20mA 0-20mA	Current	15 Bits (65636 Parts)	0.061 µA (0.000061 AMP)
High Resolution Outputs			
±10VDC	Voltage	16 Bits (65636 Parts)	305 µVDC (0.000305 VDC)
0-10VDC	Voltage	15 Bits (65636 Parts)	305 µVDC (0.000305 VDC)
±5VDC	Voltage	15 Bits (65636 Parts)	305 µVDC (0.000305 VDC)
0-5VDC	Voltage	14 Bits (65636 Parts)	305 µVDC (0.000305 VDC)
4-20mA 0-20mA	Current	15 Bits (65636 Parts)	0.061 µA (0.000061 AMP)

Chapter 3
Installation

3.1 Installation

CAUTION: Before you proceed, be sure to read and become familiar with the safety precautions at the beginning of this manual. Do not proceed if you are unsure of the safety precautions described. If you have any questions, contact Baldor before you proceed.

This section describes the expansion board installation procedure.

3.2 Receiving & Inspection

1. Observe the condition of the shipping container and report any damage immediately to the commercial carrier that delivered your expansion board.

   Note: The board has static sensitive components installed. Be sure to comply with ESD (Electro Static Discharge) mitigation procedures when handling the board.
2. Remove the board from the shipping container and remove all packing materials from the board. The container and packing materials may be retained for future use.
3. Verify that the part number of the board you received is the same as the part number listed on your purchase order.
4. Inspect the board for external physical damage that may have been sustained during shipment and report any damage immediately to the commercial carrier that delivered your board.
5. If the board is to be stored for several weeks before use, be sure that it is stored in a location that conforms to published storage humidity and temperature specifications stated in this manual.

3.3 Board Installation

The board has static sensitive components installed. Be sure to comply with ESD (Electro Static Discharge) procedures, such as the use of a (Static discharge) wrist strap to ground, when handling any component boards.

CAUTION: Be sure to accomplish this work without the presence of power of any kind.

1. Remove the expansion board from the shipping container.
2. Remove all packing material from the board.

CAUTION: Be sure all packing materials are removed from the board. Conductive foam may be present on the Connectors to prevent static build up during shipping. This can prevent proper circuit operation.

3. Be sure drive is not in operation and is secured from inadvertent control.
4. Remove all power sources from the drive.
5. Wait at least 5 minutes for internal capacitors to discharge.
6. Utilize ESD Protective measures before handling boards.
7. Refer to the drive manual and remove the enclosure cover.
8. Open the drive cover and locate Slots 1 & 2, see Figure 3-1.

   Note: Slot 3 is reserved for a feedback board only, encoder or resolver.
9. Install the expansion board in Slot 1 or 2. Be sure the board is securely pressed downward and makes good contact with the 48 pin connector in the slot position.
10. Secure the expansion board in the slot using the screw originally provided with the drive.

Figure 3-1 Expansion Board Location

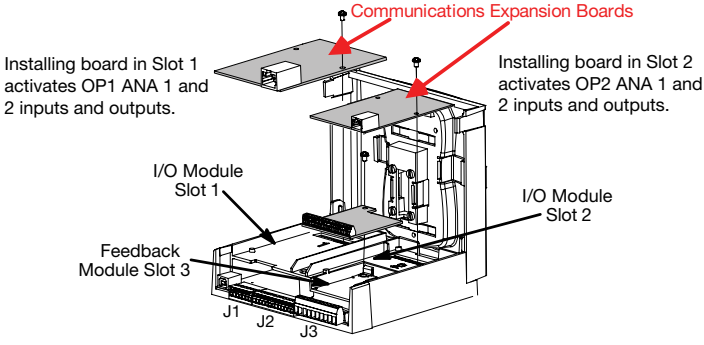

11. The mechanical installation of the expansion board is complete.
12. Refer to Jumper Definitions and configure the jumpers as desired.
13. Refer to Figures 3-3 and 3-4 and complete the wiring of the Analog Inputs and Outputs before you proceed to step 14.
14. When jumpers are set and connections are complete, close the control cover.
15. Refer to the drive manual and close and secure the enclosure cover.
16. Restore all power sources to the control.
17. Restore drive operation.

3.4 Jumper Definitions

The settings for jumpers J2 to J5 are shown in Figure 3-2.

Figure 3-2 Jumper and Terminal Locations (Top View)

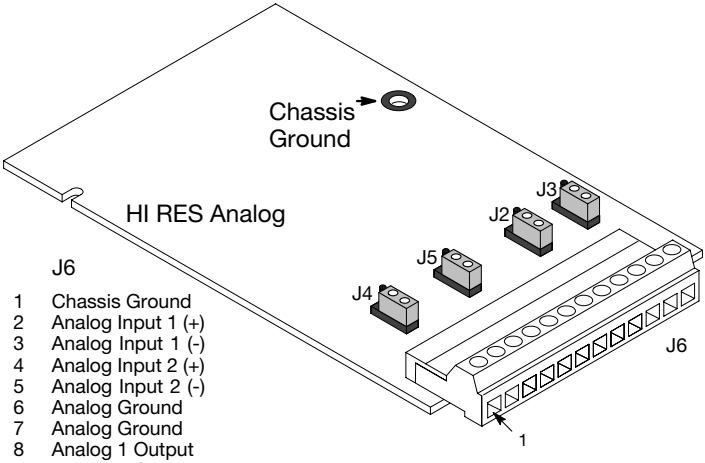

J6

1	Chassis Ground
2	Analog Input 1 (+)
3	Analog Input 1 (-)
4	Analog Input 2 (+)
5	Analog Input 2 (-)
6	Analog Ground
7	Analog Ground
8	Analog 1 Output
9	Analog 2 Output
10	Chassis Ground
11	Not Used
12	Not Used

J#	Description	Function	
J2	Analog Output 1	Voltage	I (current)
J3	Analog Output 2	Voltage	I (current)
J4	Analog Input 1	Voltage	I (current)
J5	Analog Input 2	Voltage	I (current)

Terminal tightening torque is 2 lb-in (0.24 Nm) maximum.

Figure 3-3 High Resolution Input Connections

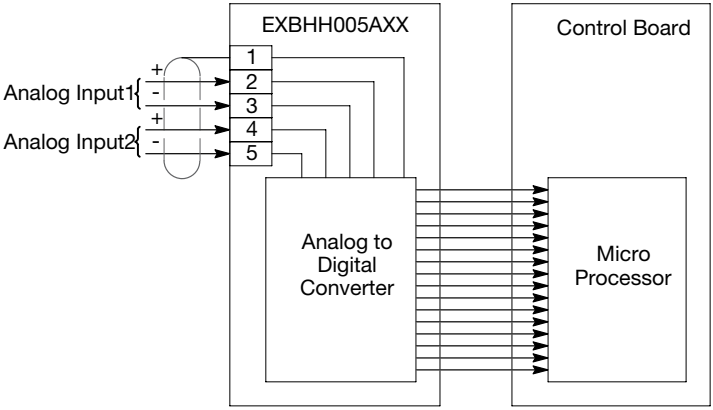

Terminal tightening torque is 2 lb-in (0.24 Nm) maximum.

Figure 3-4 High Resolution Output Connections

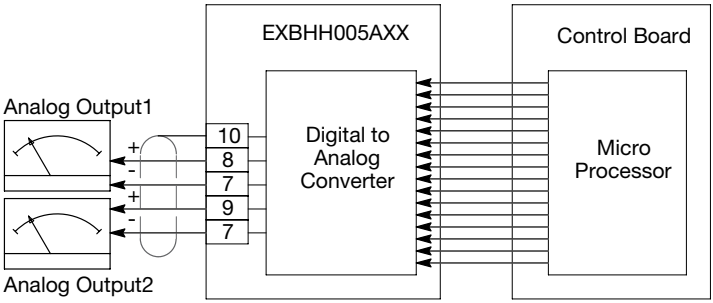

Terminal tightening torque is 2 lb-in (0.24 Nm) maximum.

Chapter 4
Software Setup

4.1 Overview

Programming setup is accomplished using the keypad of the control. General programming steps are defined in the appropriate control manual.
To install the expansion board see Section 3 of this manual.

1. Install EXBHH005 expansion board. If the board is in Slot 1, the OP1 inputs and outputs are used. If the board is in Slot 2, the OP2 inputs and outputs are used.
2. Set the Level 1 Input Setup block Command Source (P1402) to select the desired analog input to use.
3. Refer to Figure 4-1 and the Optional Analog Parameter tables and set the parameter values as desired for each input or output used.

Figure 4-1 Relationship of Parameters

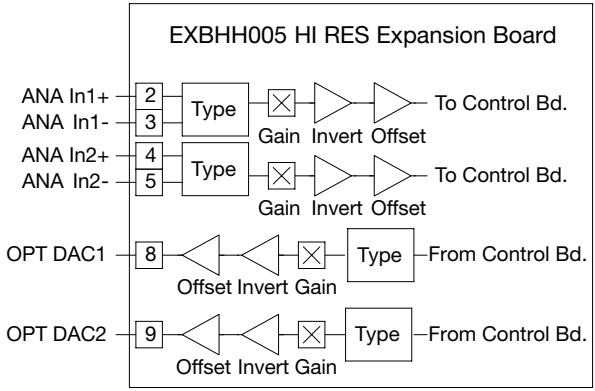

4.2 HI RES Parameters

Table 4-1 Level 1, Input Setup Block

Parameter	P#	Adjustable Range	Factory	User Setting
COMMAND SOURCE	1402	Note: Range is 0 - 10. Selections 6, 7, 8 and 9 determine which option board input is used for COMMAND SOURCE. 6-Opt1 Ana In1 7-Opt1 Ana In2 8-Opt2 Ana In1 9-Opt2 Ana In2	1	
OP1 ANA IN1 TYPE	1451	0-None 1-(-10V to +10V) 2-(-5V to +5V) 3-(4 to 20mA) 4-(0 to 20mA)	1	
OP1 ANA IN1 Invert	1452	0-Off 1-On	0	
OP1 ANA IN1 Gain	1453	0.0% to 300.0%	100.0	
OP1 ANA IN1 Offset	1454	-100.0% to 100.0%	0.0	
OP1 ANA IN1 Deadband	1455	0.0% to 75.0%	0.0	
OP1 ANA IN1 Filter	1456	0 (No Filter) to 6 (Max Filter)	0	

Table 4-1 Level 1, Input Setup Block (Continued)

Parameter	P#	Adjustable Range	Factory	User Setting
OP1 ANA IN2 Type	1457	0-None 1-(-10V to +10V) 2-(-5V to +5V) 3-(4 to 20mA) 4-(0 to 20mA)	1	
OP1 ANA IN2 Invert	1458	0-Off 1-On	0	
OP1 ANA IN2 Gain	1459	0.0% to 300.0%	100.0	
OP1 ANA IN2 Offset	1460	-100.0% to 100.0%	0.0	
OP1 ANA IN2 Deadband	1461	0.0% to 75.0%	0.0	
OP1 ANA IN2 Filter	1462	0 (No Filter) to 6 (Max Filter)	0	
OP2 ANA IN1 TYPE	1463	0-None 1-(-10V to +10V) 2-(-5V to +5V) 3-(4 to 20mA) 4-(0 to 20mA)	1	
OP2 ANA IN1 Invert	1464	0-Off 1-On	0	
OP2 ANA IN1 Gain	1465	0.0% to 300.0%	100.0	
OP2 ANA IN1 Offset	1466	-100.0% to 100.0%	0.0	
OP2 ANA IN1 Deadband	1467	0.0% to 75.0%	0.0	

Table 4-1 Level 1, Input Setup Block (Continued)

Parameter	P#	Adjustable Range	Factory	User Setting
OP2 ANA IN1 Filter	1468	0 (No Filter) to 6 (Max Filter)	0	
OP2 ANA IN2 TYPE	1469	0-None 1-(-10V to +10V) 2-(-5V to +5V) 3-(4 to 20mA) 4-(0 to 20mA)	1	
OP2 ANA IN2 Invert	1470	0-Off 1-On	0	
OP2 ANA IN2 Gain	1471	0.0% to 300.0%	100.0	
OP2 ANA IN2 Offset	1472	-100.0% to 100.0%	0.0	
OP2 ANA IN2 Deadband	1473	0.0% to 75.0%	0.0	
OP2 ANA IN2 Filter	1474	0 (No Filter) to 6 (Max Filter)	0	

Notes: OP1 parameter selections (P1451 to 1462) are available if the expansion board is installed in Slot1 of the Control.

OP2 parameter selections (P1463 to 1474) are available if the expansion board is installed in Slot2 of the Control.

Table 4-2 Level 1, Output Setup Block

Parameter	P#	Adjustable Range	Factory	User Setting
ANA OUT1 Signal	1511	Note: Range is 0 - 34. Selection 21, 22, 23, and 24 select the option board analog input for the drive analog output signal. 21-Opt1 Ana In1 22-Opt1 Ana In2 23-Opt2 Ana In1 24-Opt2 Ana In2	29	
ANA OUT2 Signal	1514	Note: Range is 0 - 34. Selection 21, 22, 23, and 24 select the option board analog input for the drive analog output signal. 21-Opt1 Ana In1 22-Opt1 Ana In2 23-Opt2 Ana In1 24-Opt2 Ana In2	3	
OP1 ANAOUT1 Type	1551	0-(0V to +10V) 1-(0V to +5V) 2-(-10V to +10V) 3-(-5V to +5V) 4-(4 to 20mA) 5-(0 to 20mA)	2	
OP1 ANAOUT2 Type	1554	2		

Table 4-2 Level 1, Output Setup Block (Continued)

Parameter	P#	Adjustable Range	Factory	User Setting
OP1 ANAOUT1 Gain	1553	0 - 500.0%	100.0	
OP1 ANAOUT2 Gain	1556		100.0	
Note: OP1 parameter selections (P1551 to 1556) are available if the expansion board is installed in Slot1 of the Control.				

Table 4-2 Level 1, Output Setup Block (Continued)

Parameter	P#	Adjustable Range	Factory	User Setting
OP1 ANAOUT1 Signal	1552	0-Speed Ref 1-Speed Demand 2-ACC/DEC 3-Motor Current 4-Mag Current 5-Mag Current Cmd 6-Load Current 7-Load Current Cmd 8-Power Factor 9-Ph1 Current 10-Ph2 Current 11-Ph3 Current 12-Motor Voltage 13-VD Demand 14-VQ Demand 15-Bus Voltage 16-Abs Torque 17-Torque 18-Control Temp 19-Analog Input1 20-Analog Input2 21-Opt1 Ana In1 22-Opt1 Ana In2 23-Opt2 Ana In1 24-Opt2 Ana In2 25-Proc Feedforward 26-Proc Feedback 27-Proc Setpoint 28-Electric Angle 29-Abs Speed 30-Velocity 31-Network 32-Composite Ref 33-Power (kW) 34-Calibrate	29	
OP1 ANAOUT2 Signal	1555		29	

Table 4-2 Level 1, Output Setup Block (Continued)

Parameter	P#	Adjustable Range	Factory	User Setting
OP2 ANAOUT1 Type	1557	0-(0V to +10V) 1-(0V to +5V) 2-(-10V to +10V) 3-(-5V to +5V) 4-(4 to 20mA) 5-(0 to 20mA)	2	
OP2 ANAOUT2 Type	1560		2	
OP2 ANAOUT1 Gain	1559	0 - 500.0%	100.0	
OP2 ANAOUT2 Gain	1562		100.0	

Table 4-2 Level 1, Output Setup Block (Continued)

Parameter	P#	Adjustable Range	Factory	User Setting
OP2 ANAOUT1 Signal	1558	0-Speed Ref 1-Speed Demand 2-ACC/DEC 3-Motor Current 4-Mag Current 5-Mag Current Cmd 6-Load Current 7-Load Current Cmd 8-Power Factor 9-Ph1 Current 10-Ph2 Current 11-Ph3 Current 12-Motor Voltage 13-VD Demand 14-VQ Demand 15-Bus Voltage 16-Abs Torque 17-Torque 18-Control Temp 19-Analog Input1 20-Analog Input2 21-Opt1 Ana In1 22-Opt1 Ana In2 23-Opt2 Ana In1 24-Opt2 Ana In2 25-Proc Feedforward 26-Proc Feedback 27-Proc Setpoint 28-Electric Angle 29-Abs Speed 30-Velocity 31-Network 32-Composite Ref 33-Power (kW) 34-Calibrate	29	
OP2 ANAOUT2 Signal	1561		29	

Note: OP2 parameter selections (P1557 to 1562) are available if the expansion board is installed in Slot2 of the Control.

Table 4-3 Level 2, Miscellaneous Block

Parameter	P#	Adjustable Range	Factory	User Setting
Filter Source	2310	Note: Range is 0 - 9. Selections 6, 7, 8 and 9 determine which option board input is used for FILTER SOURCE. 6-Opt1 Ana In1 7-Opt1 Ana In2 8-Opt2 Ana In1 9-Opt2 Ana In2	0	

Table 4-4 Level 2, Process Control Block

Parameter	P#	Adjustable Range	Factory	User Setting
Process Feedback	2603	Note: Range is 0 - 10. Selections 7, 8, 9 and 10 determine which option board input is used for PROCESS FEEDBACK. 7-Opt1 Ana In1 8-Opt1 Ana In2 9-Opt2 Ana In1 10-Opt2 Ana In2	0	
Setpoint Source	2604	Note: Range is 0 - 10. Selections 7, 8, 9 and 10 determine which option board input is used for SETPOINT SOURCE. 7-Opt1 Ana In1 8-Opt1 Ana In2 9-Opt2 Ana In1 10-Opt2 Ana In2	0	

Chapter 5
Troubleshooting

5.1 Overview

The Main Menu “Diagnostic” option is used to view the diagnostic screen.

5.2 Diagnostic Screen

At the keypad, from the Main menu the Diagnostic screens are accessed and the Option Boards display shows what boards are installed and recognized by the software. If the installed board is not displayed on this screen, the connections and software versions should be checked.
If the board is installed in Slot 1, it will be shown as Option 1.
If the board is installed in Slot 2, it will be shown as Option 2.

5.3 Installed Option Boards

Display	Comments
DIAG STOP LOCAL OPTION BOARDS OPTION 1 Ana Input OPTION 2 None FEEDBACK None STATUS 0r MAIN	Press ▶ or ◀ to go the next or previous Diagnostic screen. Press “F2” to return to previous menu. Press “F1” to return to STATUS screen.

Displays Hi Resolution Analog EXB status: voltage present at each of the Analog Inputs and Outputs.
If the EXB is installed in Slot 1, OP1 is displayed (shown).
If the EXB is installed in Slot 2, OP2 is displayed.

Display	Comments
DIAG STOP LOCAL HI RES INPUTS OP1 ANA IN1 0.0V OP2 ANA IN2 0.0V STATUS 0r MAIN	Press ▶ or ◀ to go to next or previous Diagnostic screen. Press “F2” to return to main menu. Press “F1” to return to STATUS screen. Note: This screen does not appear unless EXBHH005 is installed.
DIAG STOP LOCAL HI RES OUTPUTS OP1 ANA IN1 0.0V OP2 ANA IN2 0.0V STATUS 0r MAIN	Press ▶ or ◀ to go to next or previous Diagnostic screen. Press “F2” to return to main menu. Press “F1” to return to STATUS screen. Note: This screen does not appear unless EXBHH005 is installed.

Baldor Sales Offices

UNITED STATES

ARIZONA
PHOENIX
4211 S 43RD PLACE
PHOENIX, AZ 85040
PHONE: 602-470-0407
FAX: 602-470-0464

ARKANSAS
CLARKSVILLE
706 WEST MAIN STREET
CLARKSVILLE, AR 72830
PHONE: 479-754-9108
FAX: 479-754-9205

CALIFORNIA
LOS ANGELES
6480 FLOTILLA STREET
COMMERCE, CA 90040
PHONE: 323-724-6771
FAX: 323-721-5859

HAYWARD
21056 FORBES AVENUE
HAYWARD, CA 94545
PHONE: 510-785-9900
FAX: 510-785-9910

COLORADO
DENVER
3855 FOREST STREET
DENVER, CO 80207
PHONE: 303-623-0127
FAX: 303-595-3772

CONNECTICUT
WALLINGFORD
65 SOUTH TURNPIKE ROAD
WALLINGFORD, CT 06492
PHONE: 203-269-1354
FAX: 203-269-5485

FLORIDA
TAMPA/PUERTO RICO/ VIRGIN ISLANDS
3906 EAST 11TH AVENUE
TAMPA, FL 33605
PHONE: 813-248-5078
FAX: 813-247-2984

GEORGIA
ATLANTA
62 TECHNOLOGY DRIVE
ALPHARETTA, GA 30005
PHONE: 770-772-7000
FAX: 770-772-7200

ILLINOIS
CHICAGO
340 REMINGTON BLVD.
BOLINGBROOK, IL 60440
PHONE: 630-296-1400
FAX: 630-226-9420

INDIANA
INDIANAPOLIS
5525 W. MINNESOTA STREET
INDIANAPOLIS, IN 46241
PHONE: 317-246-5100
FAX: 317-246-5110

IOWA
DES MOINES
1943 HULL AVENUE
DES MOINES, IA 50313
PHONE: 515-263-6929
FAX: 515-263-6515

MARYLAND
BALTIMORE
6660 SANTA BARBARA RD.
SUITES 22-24
ELKRIDGE, MD 21075
PHONE: 410-579-2135
FAX: 410-579-2677

MASSACHUSETTS
BOSTON
6 PULLMAN STREET
WORCESTER, MA 01606
PHONE: 508-854-0708
FAX: 508-854-0291

MICHIGAN
DETROIT
5993 PROGRESS DRIVE
STERLING HEIGHTS, MI 48312
PHONE: 586-978-9800
FAX: 586-978-9969

MINNESOTA
MINNEAPOLIS
21080 134TH AVENUE NORTH
ROGERS, MN 55374
PHONE: 763-428-3633
FAX: 763-428-4551

MISSOURI
ST LOUIS
13678 LAKEFRONT DRIVE
EARTH CITY, MO 63045
PHONE: 314-373-3032
FAX: 314-373-3038

KANSAS CITY
1501 BEDFORD AVENUE
NORTH KANSAS CITY, MO 64116
PHONE: 816-587-0272
FAX: 816-587-3735

NEW YORK
AUBURN
ONE ELLIS DRIVE
AUBURN, NY 13021
PHONE: 315-255-3403
FAX: 315-253-9923

NORTH CAROLINA
GREENSBORO
1220 ROTHERWOOD ROAD
GREENSBORO, NC 27406
PHONE: 336-272-6104
FAX: 336-273-6628

OHIO
CINCINNATI
2929 CRESCENTVILLE ROAD
WEST CHESTER, OH 45069
PHONE: 513-771-2600
FAX: 513-772-2219

CLEVELAND
8929 FREEWAY DRIVE
MACEDONIA, OH 44056
PHONE: 330-468-4777
FAX: 330-468-4778

OKLAHOMA
TULSA
5555 E. 71ST ST., SUITE 9100
TULSA, OK 74136
PHONE: 918-366-9320
FAX: 918-366-9338

OREGON
PORTLAND
12651 SE CAPPS ROAD
CLACKAMAS, OR 97015
PHONE: 503-691-9010
FAX: 503-691-9012

PENNSYLVANIA
PHILADELPHIA
1035 THOMAS BUSCH
MEMORIAL HIGHWAY
PENNSAUKEN, NJ 08110
PHONE: 856-661-1442
FAX: 856-663-6363

PITTSBURGH
159 PROMINENCE DRIVE
NEW KENSINGTON, PA 15068
PHONE: 724-889-0092
FAX: 724-889-0094

TENNESSEE
MEMPHIS
4000 WINCHESTER ROAD
MEMPHIS, TN 38118
PHONE: 901-365-2020
FAX: 901-365-3914

TEXAS
DALLAS
2920 114TH STREET SUITE 100
GRAND PRAIRIE, TX 75050
PHONE: 214-634-7271
FAX: 214-634-8874

HOUSTON
10355 W. LITTLE YORK ROAD
SUITE 300
HOUSTON, TX 77041
PHONE: 281-977-6500
FAX: 281-977-6510

UTAH
SALT LAKE CITY
2230 SOUTH MAIN STREET
SALT LAKE CITY, UT 84115
PHONE: 801-832-0127
FAX: 801-832-8911

WISCONSIN
MILWAUKEE
1960 SOUTH CALHOUN ROAD
NEW BERLIN, WI 53151
PHONE: 262-784-5940
FAX: 262-784-1215

INTERNATIONAL SALES
FORT SMITH, AR
P.O. BOX 2400
FORT SMITH, AR 72902
PHONE: 479-646-4711
FAX: 479-648-5895

CANADA
EDMONTON, ALBERTA
4053-92 STREET
EDMONTON, ALBERTA T6E 6R8
PHONE: 780-434-4900
FAX: 780-438-2600

TORONTO
OAKVILLE, ONTARIO
2750 COVENTRY ROAD
OAKVILLE, ONTARIO L6H 6R1
PHONE: 905-829-3301
FAX: 905-829-3302

MONTREAL, QUEBEC
5155 J-ARMAND BOMBARDIER
SAINT-HUBERT, QUÉBEC
CANADA J3Z 1G4
PHONE: 514-933-2711
FAX: 514-933-8639

VANCOUVER, BRITISH COLUMBIA
1538 KEBET WAY
PORT COQUITLAM,
BRITISH COLUMBIA V3C 5M5
PHONE 604-421-2822
FAX: 604-421-3113

WINNIPEG, MANITOBA
54 PRINCESS STREET
WINNIPEG, MANITOBA R3B 1K2
PHONE: 204-942-5205
FAX: 204-956-4251

AUSTRALIA
UNIT 3, 6 STANTON ROAD
SEVEN HILLS, NSW 2147, AUSTRALIA
PHONE: (61) (2) 9674 5455
FAX: (61) (2) 9674 2495

UNIT 8, 5 KELLETTS ROAD
ROWVILLE, VICTORIA, 3178 AUSTRALIA
PHONE: (61) (3) 9753 4355
FAX: (61) (3) 9753 4366

EL SALVADOR
RESIDENCIAL PINARES DE SUIZA
POL. 15 #44,
NVA. SAN SALVADOR, EL SALVADOR
PHONE: +503 2288-1519
FAX: +503 2288-1518

CHILE
ALCÁNTARA 200, FLOOR 8
POSTAL CODE 7550159
LAS CONDES, SANTIAGO, CHILE
PHONE: +56 2 6514707

CHINA
160 SONG SHENG ROAD
SONGJIANG INDUSTRY ZONE
SHANGHAI 201613, CHINA
PHONE: +86 21 5760 5335
FAX : +86 21 5760 5336

GERMANY
HERMANN-HEINRICH-GOSSEN-STRASSE 3
KÖLN, D-50858 GERMANY
PHONE: +49 2234 37941-0
FAX: +49 2234 3794164

DIESELSTRASSE 22
KIRCHHEIM, D-85551
MUNICH, GERMANY
PHONE: +49 89 90508-0
FAX: +49 89 9050886

INDIA
OFFICE NO 517 & 518,
5TH FLOOR, SIDDHARTH TOWERS,
CTS NO. 421 (1), SURVEY NO 12,
KOTHRUD, PUNE 411 038,
MAHARASHTRA, INDIA
PHONE: + 91 20 25 45 27 17
FAX: + 91 20 25 45 27 19

INDONESIA
TALAVERA OFFICE PARK,
28TH FLOOR, SUITE M18
JI. T.B. SIMATUPANG, KAV. 22-26
CILANDAK, JAKARTA SELATAN, 12430
INDONESIA
PHONE: +62 21 75 999 879
FAX: + 62 21 75 999 878

ITALY
VIA SOTTOBISIO 30
CH-6828 BALERNA
SWITZERLAND
PHONE: +41 91 683 6161
FAX: +41 91 630 2633

JAPAN
DIA BLDG 802,
2-21-1 TSURUYA-CHO,
KANAGAWA-KU
YOKOHAMA, 221-0835, JAPAN
PHONE: 81-45-412-4506
FAX: 81-45-412-4507

KOREA
RM#1715, SUSEO TOWER, 725,
SUSEO-DONG, GANGNAM-GU,
SEOUL 135-757 KOREA
PHONE: (82) 2 2226 9369
FAX: (82) 2 2226 9368

MEXICO
LEON, GUANAJUATO
KM. 2.0 BLVD. AEROPUERTO
LEÓN 37545, GUANAJUATO, MÉXICO
PHONE: +52 477 761 2030
FAX: +52 477 761 2010

MIDDLE EAST & NORTH AFRICA
VSE INTERNATIONAL CORP.
3233 N ARLINGTON HEIGHTS ROAD
SUITE 100W
ARLINGTON HEIGHTS, IL 60004 USA
PHONE: 847 590 5547
FAX: 847 590 5587

PANAMA
AVE. RICARDO J. ALFARO
EDIFICIO SUN TOWERS MALL
PISO 2, LOCAL 55
CIUDAD DE PANAMÁ, PANAMÁ
PHONE: +507 236-5155
FAX: +507 236-0591

SINGAPORE
18 KAKI BUKIT ROAD 3, #03-09
ENTREPRENEUR BUSINESS CENTRE
SINGAPORE 415978
PHONE: (65) 6744 2572
FAX: (65) 6747 1708

SWITZERLAND
POST FACH 73
SCHUETZENSTRASSE 59
FEUERTHALEN, CH-8245
SWITZERLAND
PHONE: +41 52 647 4700
FAX: +41 52 659 2394

TAIWAN
1F, NO 126 WENSHAN 3RD STREET,
NANTUN DISTRICT,
TAICHUNG CITY 408
TAIWAN R.O.C
PHONE: (886) 4 238 04235
FAX: (886) 4 238 04463

UNITED KINGDOM
6 BRISTOL DISTRIBUTION PARK
HAWKLEY DRIVE
BRISTOL BS32 0BF U.K.
PHONE: +44 1454 850000
FAX: +44 1454 859001

VENEZUELA
AV. ROMA. QTA EL MILAGRO. URB.
CALIFORNIA NORTE
CARACAS, 1070
VENEZUELA
PHONE/FAX: +58 212 272 7343
MOBILE: +58 414 114 8623

754-0312

BALDOR

A MEMBER OF THE ABB GROUP

P.O. Box 2400, Fort Smith, AR 72902-2400 U.S.A., Ph: (1) 479.646.4711, Fax (1) 479.648.5792,
International Fax (1) 479.648.5895

Baldor - Dodge

6040 Ponders Court, Greenville, SC 29615-4617 U.S.A., Ph: (1) 864.297.4800,
Fax: (1) 864.281.2433

www.baldor.com

© Baldor Electric Company All Rights Reserved. Printed in USA.

MN754 03/12