Isolated Input Expansion Board

Catalog No. EXBHH003A01

Installation and Operating Manual

7/06 MN753

Any trademarks used in this manual are the property of their respective owners.

Table of Contents

Section 1
General Information 1-1
Introduction 1-1
Limited Warranty 1-2
Safety Notice 1-3
Section 2
Expansion Board Description 2-1
Section 3
Installation 3-1
Receiving & Inspection 3-1
Board Installation 3-1

Section 1
General Information

Introduction

The Baldor controls represent the latest technology in microprocessor based motor controls. In addition to the user programmable parameters available in every control, many different expansion boards are available from Baldor to further customize the control to most any application. Originally designed for the H2 controls, these same boards are compatible with our flagship products, the VS1SP, VS1GV and VS1SD controls.

Table 1-1 VS1 Expansion Boards

Board Name	Catalog No.	Manual No.
Ethernet Server Expansion Board	EXBHH001AXX	MN751
Mint® Expansion Board	EXBHH002AXX	MN752
Isolated Input Expansion Board	EXBHH003AXX	MN753
High Resolution Analog Board	EXBHH005AXX	MN754
Master Pulse Reference / Isolated Pulse Follower	EXBHH007AXX	MN755
DeviceNet / Ethernet/IP Expansion Board	EXBHH013AXX	MN756
Profibus DP Expansion Board	EXBHH014AXX	MN758
LonWorks Communications Expansion Board	EXBHH016AXX	MN759

Limited Warranty

For a period of two (2) years from the date of original purchase, BALDOR will repair or replace without charge controls and accessories which our examination proves to be defective in material or workmanship. This warranty is valid if the unit has not been tampered with by unauthorized persons, misused, abused, or improperly installed and has been used in accordance with the instructions and/or ratings supplied. This warranty is in lieu of any other warranty or guarantee expressed or implied. BALDOR shall not be held responsible for any expense (including installation and removal), inconvenience, or consequential damage, including injury to any person or property caused by items of our manufacture or sale. (Some states do not allow exclusion or limitation of incidental or consequential damages, so the above exclusion may not apply.) In any event, BALDOR's total liability, under all circumstances, shall not exceed the full purchase price of the control. Claims for purchase price refunds, repairs, or replacements must be referred to BALDOR with all pertinent data as to the defect, the date purchased, the task performed by the control, and the problem encountered. No liability is assumed for expendable items such as fuses.

Goods may be returned only with written notification including a BALDOR Return Authorization Number and any return shipments must be prepaid.

Safety Notice

This equipment contains voltages that may be as great as 1000 volts! Electrical shock can cause serious or fatal injury. Only qualified personnel should attempt the start-up procedure or troubleshoot this equipment.

This equipment may be connected to other machines that have rotating parts or parts that are driven by this equipment. Improper use can cause serious or fatal injury. Only qualified personnel should attempt the start-up procedure or troubleshoot this equipment.

PRECAUTIONS

WARNING: Do not touch any circuit board, power device or electrical connection before you first ensure that power has been disconnected and there is no high voltage present from this equipment or other equipment to which it is connected. Electrical shock can cause serious or fatal injury. Only qualified personnel should attempt the start-up procedure or troubleshoot this equipment.

WARNING: Be sure that you are completely familiar with the safe operation of this equipment. This equipment may be connected to other machines that have rotating parts or parts that are controlled by this equipment. Improper use can cause serious or fatal injury. Only qualified personnel should attempt the start-up procedure or troubleshoot this equipment.

WARNING: Be sure the system is properly grounded before applying power. Do not apply AC power before you ensure that all grounding instructions have been followed. Electrical shock can cause serious or fatal injury.

WARNING: Do not remove cover for at least five (5) minutes after AC power is disconnected to allow capacitors to discharge. Dangerous voltages are present inside the equipment. Electrical shock can cause serious or fatal injury.

Continued on next page

WARNING: **Improper operation of control may cause violent motion of the motor shaft and driven equipment. Be certain that unexpected motor shaft movement will not cause injury to personnel or damage to equipment. Peak torque of several times the rated motor torque can occur during control failure.**

WARNING: **Motor circuit may have high voltage present whenever AC power is applied, even when motor is not rotating. Electrical shock can cause serious or fatal injury.**

Caution: **To prevent equipment damage, be certain that the electrical service is not capable of delivering more than the maximum line short circuit current amperes listed in the appropriate control manual, 240 VAC, 480 VAC or 600 VAC maximum per control rating.**

Caution: **Before you proceed, be sure to read and become familiar with the safety precautions at the beginning of this manual. If you have any questions, seek expert advise before you proceed. Do not proceed if you are unsure of the safety precautions or any procedure.**

Caution: **Be sure all packing materials are removed from the board. Conductive foam may be present on the connectors to prevent static build up during shipping. This can prevent proper circuit operation.**

Caution: **Static electricity damages electrical components. This board has static sensitive components installed. Be sure to comply with ESD (Electro Static Discharge) procedures when handling circuit boards and components.**

Section 2
Expansion Board Description

Introduction

Isolated Input Expansion Board
Catalog No. EXBHH003AXX.

Features:

Optically Isolated Inputs

Table 2-1 defines the specifications of the Isolated Input Expansion Board.

Table 2-1 Specifications

Catalog No.	No. of Inputs	Input Voltage	Input Freq.	Input Impedance
EXBHH003A01	9	70-130 VAC	48 - 62 Hz	33 KΩ

The Isolated Input Expansion Board converts high level AC voltage to the proper range for the Motor Control Board. The inputs are used to command the ON and OFF states of the digital command inputs of the Motor Control Board.

The isolated inputs terminals automatically perform the programmed function of the respective Motor Control Board inputs. See Figure 2-1. This means that when the Isolated Input Expansion Board is installed, external connection to those Motor Control Board terminals is not allowed.

Figure 2-1 Expansion Board/Motor Control Board Relation

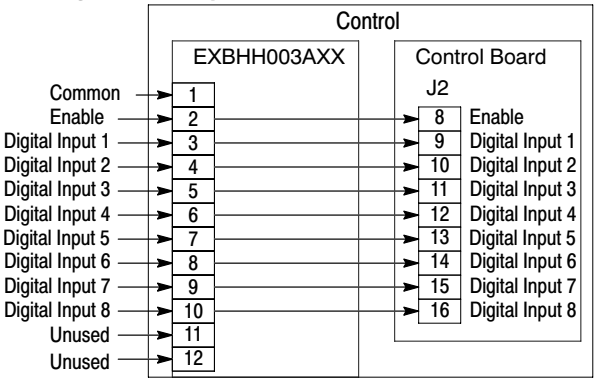

Terminal tightening torque is 2 lb-in (0.24 Nm) maximum.

Section 3
Installation

Caution: Before you proceed, be sure to read and become familiar with the safety precautions at the beginning of this manual. If you have any questions, seek expert advise before you proceed. Do not proceed if you are unsure of the safety precautions or any procedure.

This section describes the expansion board installation procedure.

Receiving & Inspection

1. Observe the condition of the shipping container and report any damage immediately to the commercial carrier that delivered your control.
2. Remove the control from the shipping container and remove all packing materials from the control. The container and packing materials may be retained for future shipment.
3. Verify that the part number of the control you received is the same as the part number listed on your purchase order.
4. Inspect the control for external physical damage that may have been sustained during shipment and report any damage immediately to the commercial carrier that delivered your control.
5. If the control is to be stored for several weeks before use, be sure that it is stored in a location that conforms to published storage humidity and temperature specifications stated in this manual.

Board Installation

Caution: Static electricity damages electrical components. This board has static sensitive components installed. Be sure to comply with ESD (Electro Static Discharge) procedures when handling circuit boards and components.

1. Remove the expansion board from the shipping container.
2. Remove all packing material from the board.

Caution: Be sure all packing materials are removed from the board. Conductive foam may be present on the connectors to prevent static build up during shipping. This can prevent proper circuit operation.

3. Be sure drive operation is terminated and secured.
4. Remove all power sources from the control.
5. Wait at least 5 minutes for internal capacitors to discharge.
6. Refer to the control manual and remove the enclosure cover.
7. Open the control cover and locate Slots 1 & 2, see Figure 3-1.
   Note: Slot 3 is reserved for a feedback board only, encoder or resolver.
8. Install the expansion board in Slot 1 or 2. Be sure the board is securely pressed downward and makes good contact with the 48 pin connector in the slot position.
9. Secure the expansion board in the slot using the screw provided.
10. At the control board, connect J2-8 to J3-24 Enable.
11. At the expansion board, connect Enable (close input switch) to enable the control.
    Note: Both enables (steps 10 and 11) must be active for operation.

Figure 3-1 Expansion Board Slot Locations

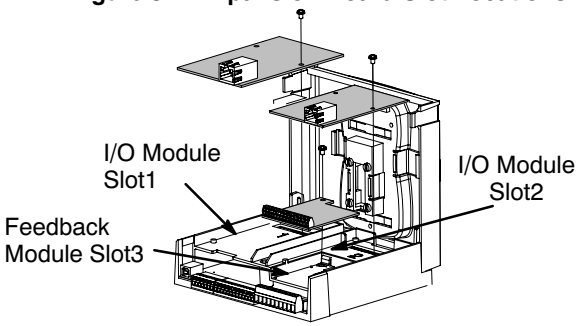

12. The mechanical installation of the expansion board is complete.

Figure 3-2 Jumper and Terminal Locations (Top View)

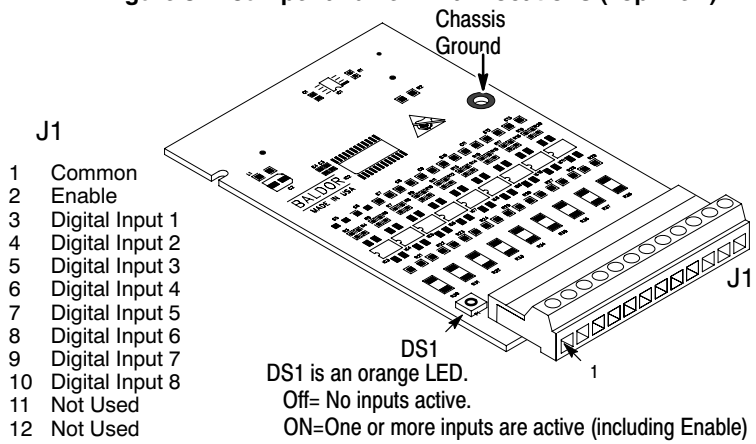

Terminal tightening torque is 2 lb-in (0.24 Nm) maximum.

Figure 3-3 Isolated Input Connections

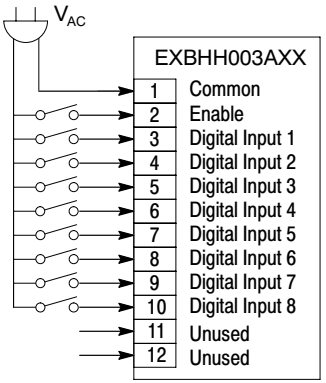

Terminal tightening torque is 2 lb-in (0.24 Nm) maximum.

Baldor District Offices

UNITED STATES

ARIZONA
PHOENIX
4211 S 43RD PLACE
PHOENIX, AZ 85040
PHONE: 602-470-0407
FAX: 602-470-0464

ARKANSAS
CLARKSVILLE
1001 COLLEGE AVE.
CLARKSVILLE, AR 72830
PHONE: 479-754-9108
FAX: 479-754-9205

CALIFORNIA
LOS ANGELES
6480 FLOTILLA
COMMERCE, CA 90040
PHONE: 323-724-6771
FAX: 323-721-5859

HAYWARD
21056 FORBES STREET
HAYWARD, CA 94545
PHONE: 510-785-9900
FAX: 510-785-9910

COLORADO
DENVER
3855 FOREST STREET
DENVER, CO 80207
PHONE: 303-623-0127
FAX: 303-595-3772

9980 PARK MEADOWS DRIVE
SUITE 214
LONE TREE, CO 80124-6739
PHONE: 303-339-9629
FAX: 303-339-9633

CONNECTICUT
WALLINGFORD
65 SOUTH TURNPIKE ROAD
WALLINGFORD, CT 06492
PHONE: 203-269-1354
FAX: 203-269-5485

FLORIDA
TAMPA/PUERTO RICO/
VIRGIN ISLANDS
3906 EAST 11TH AVENUE
TAMPA, FL 33605
PHONE: 813-248-5078
FAX: 813-247-2984

GEORGIA
ATLANTA
62 TECHNOLOGY DR.
ALPHARETTA, GA 30005
PHONE: 770-772-7000
FAX: 770-772-7200

5490 MCGINNIS FERRY PLACE
SUITE 133
ALPHARETTA, GA 30005
PHONE: 770-752-4254
FAX: 770-752-4257

ILLINOIS
CHICAGO
1601 FRONTENAC ROAD
NAPERVILLE, IL 60563
PHONE: 630-848-5100
FAX: 630-848-5110

INDIANA
COLUMBUS
3300 TENTH ST
COLUMBUS, IN 47201
PHONE: 812-378-2556
FAX: 812-378-2555

INDIANAPOLIS
5525 W. MINNESOTA STREET
INDIANAPOLIS, IN 46241
PHONE: 317-246-5100
FAX: 317-246-5110

IOWA
DES MOINES
1800 DIXON STREET, SUITE C
DES MOINES, IA 50316
PHONE: 515-263-6929
FAX: 515-263-6515

KANSAS
5030 BOB BILLINGS PKWY STE B
LAWRENCE, KS 66049
PHONE: 785-749-4339
FAX: 785-749-4217

MARYLAND
BALTIMORE
6660 SANTA BARBARA RD.
SUITE 22-24
ELKRIDGE, MD 21075
PHONE: 410-579-2135
FAX: 410-579-2677

MASSACHUSETTS
BOSTON
6 PULLMAN STREET
WORCESTER, MA 01606
PHONE: 508-854-0708
FAX: 508-854-0291

MICHIGAN
DETROIT
33782 STERLING PONDS BLVD.
STERLING HEIGHTS, MI 48312
PHONE: 586-978-9800
FAX: 586-978-9969

GRAND RAPIDS
668 THREE MILE ROAD NW
GRAND RAPIDS, MI 49504
PHONE: 616-785-1784
FAX: 616-785-1788

MINNESOTA
MINNEAPOLIS
21080 134TH AVE. NORTH
ROGERS, MN 55374
PHONE: 763-428-3633
FAX: 763-428-4551

MISSOURI
ST LOUIS
422 INDUSTRIAL DRIVE
MARYLAND HEIGHTS, MO 63043
PHONE: 314-298-1800
FAX: 314-298-7660

KANSAS CITY
1501 BEDFORD AVENUE
NORTH KANSAS CITY, MO 64116
PHONE: 816-587-0272
FAX: 816-587-3735

NEW YORK
AUBURN
ONE ELLIS DRIVE
AUBURN, NY 13021
PHONE: 315-255-3403
FAX: 315-253-9923

NORTH CAROLINA
GREENSBORO
1220 ROTHERWOOD ROAD
GREENSBORO, NC 27406
P O BOX 16500
GREENSBORO, NC 27416
PHONE: 336-272-6104
FAX: 336-273-6628

OHIO
CINCINNATI
2929 CRESCENTVILLE ROAD
WEST CHESTER, OH 45069
PHONE: 513-771-2600
FAX: 513-772-2219

CLEVELAND
8929 FREEWAY DRIVE
MACEDONIA, OH 44056
PHONE: 330-468-4777
FAX: 330-468-4778

29525 CHAGRIN BLVD SUITE 208
CLEVELAND, OH 44122
PHONE: 216-360-8296
FAX: 216-360-4172

OKLAHOMA
TULSA
2 EAST DAWES
BIXBY, OK 74008
PHONE: 918-366-9320
FAX: 918-366-9338

OREGON
PORTLAND
20393 SW AVERY COURT
TUALATIN, OR 97062
PHONE: 503-691-9010
FAX: 503-691-9012

PENNSYLVANIA
KING OF PRUSSIA
1060 FIRST AVE STE 400
KING OF PRUSSIA, PA 19406
PHONE: 610-768-8018
FAX: 215-672-5759

PHILADELPHIA
1035 THOMAS BUSCH
MEMORIAL HIGHWAY
PENNSAUKEN, NJ 08110
PHONE: 856-661-1442
FAX: 856-663-6363

PITTSBURGH
159 PROMINENCE DRIVE
NEW KENSINGTON, PA 15068
PHONE: 724-889-0092
FAX: 724-889-0094

TENNESSEE
MEMPHIS
4000 WINCHESTER ROAD
MEMPHIS, TN 38118
PHONE: 901-365-2020
FAX: 901-365-3914

TEXAS
ADDISON
3939 BELT LINE ROAD #250
ADDISON, TX 75001
PHONE: 972-499-7746, 499-7747
FAX: 972-242-1505

HOUSTON
4647 PINE TIMBERS
SUITE # 135
HOUSTON, TX 77041
PHONE: 713-895-7062
FAX: 713-690-4540

DALLAS
3040 QUEBEC
DALLAS, TX 75247
PHONE: 214-634-7271
FAX: 214-634-8874

UTAH
SALT LAKE CITY
2230 SOUTH MAIN STREET
SALT LAKE CITY, UT 84115
PHONE: 801-832-0127
FAX: 801-832-8911

VIRGINIA
RICHMOND
6767 FOREST HILL AVE STE 305
RICHMOND, VA 23225
PHONE: 804-545-6848
FAX: 804-545-6840

WASHINGTON
KIRKLAND, WA
550 KIRKLAND WAY STE 205
KIRKLAND, WA 98033
PHONE: 425-952-5000
FAX: 775-255-8019

WISCONSIN
MILWAUKEE
2725 SOUTH 163RD STREET
NEW BERLIN, WI 53151
PHONE: 262-784-5940
FAX: 262-784-1215

WAUKESHA
N14 W23777 STONE RIDGE DRIVE
SUITE 170
WAUKESHA, WI 53188
PHONE: 262-347-2000
FAX: 262-437-0258

INTERNATIONAL SALES
FORT SMITH, AR
P.O. BOX 2400
FORT SMITH, AR 72902
PHONE: 479-646-4711
FAX: 479-648-5895

CANADA
EDMONTON, ALBERTA
4053-92 STREET
EDMONTON, ALBERTA T6E 6R8
PHONE: 780-434-4900
FAX: 780-438-2600

11428-168 STREET
EDMONTON, ALBERTA T5M 3T9
PHONE: 780-822-7865
FAX: 780-822-7878

MISSISSAUGA, ONTARIO
244 BRITANNIA ROAD EAST
MISSISSAUGA, ONTARIO L4Z 1S6
PHONE: 905-890-5110
FAX: 905-890-5540

OAKVILLE, ONTARIO
2750 COVENTRY ROAD
OAKVILLE, ONTARIO L6H 6R1
PHONE: 905-829-3301
FAX: 905-829-3302

DORVAL, QUEBEC
95 RUE LINDSAY
DORVAL QUEBEC H9P 2S6
PHONE: 514-422-8818
FAX: 514-422-8982

MONTREAL, QUEBEC
1844 WILLIAM STREET
MONTREAL, QUEBEC H3J 1R5
PHONE: 514-933-2711
FAX: 514-933-8539

VANCOUVER,
BRITISH COLUMBIA
1538 KEBET WAY
PORT COQUITLAM,
BRITISH COLUMBIA V3C 5M5
PHONE 604-421-2822
FAX: 604-421-3113

WINNIPEG, MANITOBA
54 PRINCESS STREET
WINNIPEG, MANITOBA R3B 1K2
PHONE: 204-942-5205
FAX: 204-956-4251

AUSTRALIA
UNIT 3, 6 STANTON ROAD
SEVEN HILLS, NSW 2147,AUSTRALIA
PHONE: (61) (2) 9674 5455
FAX: (61) (2) 9674 2495

UNIT 8, 5 KELLETTS ROAD
ROWVILLE, VICTORIA, 3178
AUSTRALIA
PHONE: (61) (3) 9753 4355
FAX: (61) (3) 9753 4366

EL SALVADOR
RESIDENCIAL PINARES DE SUIZA
POL. 15 #44,
NVA. SAN SALVADOR, EL SALVADOR
PHONE: +503 2288-1519
FAX: +503 2288-1518

CHILE
LUIS THAYER OJEDA 166,
OF 402 - PROVIDENCIA
SANTIAGO, CHILE
PHONE: 56-2-290-0762
FAX: 56-2-290-0762

CHINA
ROOM NO. A-8421
JIAHUA BUSINESS CENTER
808 HONG QIAO ROAD
SHANGHAI 200030, CHINA
PHONE: (86-21) 6447 3060
FAX: (86-21) 6407 8620

UNIT 905, 9TH FLOOR,
TOWER B WANDA PLAZA
NO. 93 JIANGUO ROAD,
CHAOYANG DISTRICT
BEIJING, 100022, CHINA
PHONE +86 (010) 58205516
FAX +86 (010) 58204231

GERMANY
DIESELSTRASSE 22
D-85551 KIRCHHEIM
MUNICH, GERMANY
PHONE: +49 89 90 5080
FAX: +49 89 90 50 8492

INDIA
14, COMMERCE AVENUE
MAHAGANESH COLONY
PAUD ROAD PUNE - 411038
MAHARASHTRA, INDIA
PHONE: 91 20 25452717, 25452718
FAX: 91 20 25452719

ITALY
BALDOR ASR AG
SUCCURSALE DI MENDRISIO
VIA BORROMINI, 20A
CH-6850 MENDRISIO
SWITZERLAND
PHONE: 0041 91 640 99 50
FAX: 0041 91 630 26 33

JAPAN
DIA BLDG 802,
2-21-1 TSURUYA-CHO,
KANAGAWA-KU
YOKOHAMA, 221-0835, JAPAN
PHONE: 81-45-412-4506
FAX: 81-45-412-4507

KOREA
ROOM 208-37
INCHEON INDUSTRIAL GOODS
CIRCULATING CENTER
SONGHYEON 3-DONG, DONG-GU
INCHEON. KOREA, 401-705
PHONE: (82) 32 588 3253
FAX: (82) 32 588 3254

MEXICO
LEON, GUANAJUATO
KM. 2.0 BLVD. AEROPUERTO
LEON 37545, GUANAJUATO, MÉXICO
PHONE: 52 477 761 2030
FAX: 52 477 761 2010

MIDDLE EAST & NORTH AFRICA
VSE INTERNATIONAL CORP.
P. O. BOX 5618
BUFFALO GROVE, IL 60089-5618
PHONE: 847 590 5547
FAX: 847 590 5587

SINGAPORE
51 KAKI BUKIT ROAD 2
K B WAREHOUSE COMPLEX
SINGAPORE 417863
PHONE: (65) 6744 2572
FAX: (65) 6747 1708

PANAMA
AVE. RICARDO J. ALFARO
EDIFICIO SUN TOWERS MALL
PISO 2, LOCAL 55
CIUDAD DE PANAMÁ, PANAMÁ
PHONE: +507 236-5155
FAX: +507 261-5355

SWITZERLAND
POSTFACH 73
SCHUTZENSTRASSE 59
CH-8245 FEUERTHALEN
SWITZERLAND
PHONE: +41 52 647 4700
FAX: +41 52 659 2394

TAIWAN
1F, NO 126 WENSHAN 3RD STREET,
NANTUN DISTRICT,
TAICHUNG CITY 408
TAIWAN R.O.C
PHONE: (886) 4 238 04235
FAX: (886) 4 238 04463

UNITED KINGDOM
6 BRISTOL DISTRIBUTION PARK
HAWKLEY DRIVE
BRISTOL BS32 0BF U.K.
PHONE: +44 1454 850000
FAX: +44 1454 859001

VENEZUELA
AV. ROMA. QTA EL MILAGRO. URB.
CALIFORNIA NORTE
CARACAS, 1070
VENEZUELA
PHONE: 58-414-114-8623
FAX: 58-412-322-5790

753-706

BALDOR

BALDOR • DODGE • RELIANCE

BALDOR ELECTRIC COMPANY
World Headquarters
P.O. Box 2400 Fort Smith, AR 72901-2400
(479) 646-4711 Fax (479) 648-5792
www.baldor.com

© 2005 Baldor Electric
Printed in USA
7/06
MN753