AC & DC Motor Installation & Maintenance

Safety Notice Be sure to read and understand all of the Safety Notice statements in MN408. A copy is available at:
http://www.baldor.com/support/literature_load.asp?ManNumber=MN408

ACCEPTANCE
Thoroughly inspect this equipment before accepting shipment from the transportation company. If any damage or shortage is discovered do not accept until noted on the freight bill. Report all damage to the freight carrier.

SAFETY
Eye bolts, lifting lugs or lifting openings, if provided, are intended only for lifting the motor and motor mounted standard accessories not exceeding, in total 30% of the motor weight. These lifting provisions should never be used when lifting or handling the motor and driven equipment. Eye bolt lifting capacity rating is based on a lifting alignment coincident with eye bolt center line. Eye bolt capacity reduces as deviation from this alignment is increased. Be sure eye bolts are tight and prevented from turning before lifting.

INSTALLATION OUTSIDE THE USA:
Refer to MN408 and MN1383 for Compliance with European Directives. Copies are available at:
http://www.baldor.com/support/literature_load.asp

MOTOR ENCLOSURE
ODP, **Open drip proof** motors are intended for use in clean, dry locations with adequate supply of cooling air. These motors should not be used in the presence of flammable or combustible materials. Open motors can emit flame and/or molten metal in the event of insulation failure.
TEFC, **totally enclosed** motors are intended for use where moisture, dirt and/or corrosive materials are present in indoor and outdoor locations.
Explosion protected motors, as indicated by a Nationally Recognized Testing Laboratory Certification mark and marking with Class, Division and Temperature Code are intended for installation in hazardous locations as described in Article 500 of the NEC. Refer to MN408 for more details.

MOUNTING
Foot mounted machines should be mounted to a rigid foundation to prevent excessive vibration. Shims may be used if location is uneven.
Flange mounted machines should be properly seated and aligned. Note: If improper rotation direction is detrimental to the load, check rotation direction prior to coupling the load to the motor shaft.
For **V-belt drive,** mount the sheave pulley close to the motor housing. Allow clearance for end to end movement of the motor shaft. Do not overtighten belts as this may cause premature bearing failure or shaft breakage.
Direct coupled machines should be carefully aligned and the shaft should rotate freely without binding.

GENERAL
The user must select a motor starter and overcurrent protection suitable for this motor and its application. Consult motor starter application data as well as the National Electric Code and/or applicable local codes. Special motors for use by United States Government including special specifications, master plans, etc. refer to the applicable master plans and specifications involved.
On motors received from the factory with the shaft blocked, remove blocking before operating the motor. If motor is to be reshipped alone or installed to another piece of equipment, the shaft block must be installed to prevent axial movement and prevent brinelling of the bearings during shipment.

TESTING
If the motor has been in storage for an extensive period or has been subjected to adverse moisture conditions, check the motor insulation resistance with a meg ohm meter. Depending on storage conditions it may be necessary to regrease or change rusted bearings. Contact Baldor District Office if resistance is less than 5 meg ohms.

WARNING: Do not touch electrical connections before you first ensure that power has been disconnected. Electrical shock can cause serious or fatal injury.
WARNING: Be sure the system is properly grounded before applying power. Electrical shock can cause serious or fatal injury.

INSTALLATION
This motor must be installed in accordance with National Electric Code, NEMA MG-2, IEC standards and local codes.

WIRING
Connect the motor as shown in the connection diagrams. If this motor is installed as part of a motor control drive system, connect and protect the motor according to the control manufacturers diagrams. Refer to MN408 for additional details on lead marking. The wiring, fusing and grounding must comply with the National Electrical Code or IEC and local codes. When the motor is connected to the load for proper direction of rotation and started, it should start quickly and run smoothly. If not, stop the motor immediately and determine the cause. Possible causes are: low voltage at the motor, motor connections are not correct or the load is too heavy. Check the motor current after a few minutes of operation and compare the measured current with the nameplate rating.

GROUNDING
Ground the motor according to NEC and local codes. In the USA consult the National Electrical Code, Article 430 for information on grounding of motors and generators, and Article 250 for general information on grounding. In making the ground connection, the installer should make certain that there is a solid and permanent metallic connection between the ground point, the motor or generator terminal housing, and the motor or generator frame. In non-USA locations consult the appropriate national or local code applicable.

ADJUSTMENT
The neutral is adjustable on some DC motors. AC motors have no adjustable parts.

Noise
For specific sound power or pressure level information, contact your local Baldor representative.

VIBRATION
This motor is balanced to NEMA MG1, Part 7 standard.

BRUSHES (DC Motors)
Periodically, the brushes should be inspected and all brush dust blown out of the motor. If a brush is worn $^1/_2$, (length specified in renewal parts data), replace the brushes. Reassemble and seat the new brushes using a brush seating stone. Be sure the rocker arm is set on the neutral mark.

WARNING: Guards must be installed for rotating parts such as couplings, pulleys, external fans, and unused shaft extensions, should be permanently guarded to prevent accidental contact by personnel. Accidental contact with body parts or clothing can cause serious or fatal injury.

INSPECTION

Before connecting the motor to an electrical supply, inspect for any damage resulting from shipment. Turn the shaft by hand to ensure free rotation. Motor leads must be isolated before the shaft will turn freely on permanent magnet motors.

DRAIN PLUGS

Condensation drain plugs are provided at four points on each endplate for various motor mounting configurations. For Washdown and totally enclosed, fan cooled or non-ventilated motors, the plugs in the lowest portion of the ends shields should be removed for operation (unless the motor has special stainless steel drains). All drains are located in the lowest portion of the ends shields.

MOUNTING

Mount the motor on a foundation sufficiently rigid to prevent excessive vibration. Grease lubricated ball bearing motors may be mounted with the feet at any angle. After careful alignment, bolt motor securely in place. Use shim to fill any unevenness in the foundation. Motor feet should sit solidly on the foundation before mounting bolts are tightened.

IP (Ingress Protection)

IP designations include two numerals, the first characteristic numeral is for ingress solid bodies and from dust.
The second for ingress protection from liquid - water.
Motors marked less than IP23 require additional protection from water.

GUARDING

After motor installation is complete, a guard of suitable dimensions must be constructed and installed around the motor/gearmotor. This guard must prevent personnel from coming in contact with any moving parts of the motor or drive assembly but must allow sufficient cooling air to pass over the motor.
If a motor mounted brake is installed, provide proper safeguards for personnel in case of brake failure.
Brush inspection plates and electrical connection cover plates or lids, must be installed before operating the motor.

STARTING

Before starting motor remove all unused shaft keys and loose rotating parts to prevent them from flying off.
Check direction of rotation before coupling motor to load.
The motor should start quickly and run smoothly and with little noise. If the motor should fail to start the load may be too great for the motor, the voltage is low or the motor has been miswired. In any case immediately shut motor off and investigate the cause.

ROTATION

To reverse the direction of rotation, disconnect and lockout power and interchange any two of the three AC power leads for three phase motors. For two-phase four wire, disconnect and lockout power and interchange the AC line leads on any one phase. For two phase three wire, disconnect and lockout power and interchange phase one and phase two AC line leads.

Maintenance Procedures

WARNING: Do not touch electrical connections before you first ensure that power has been disconnected. Electrical shock can cause serious or fatal injury.

WARNING: Surface temperatures of motor enclosures may reach temperatures which can cause discomfort or injury to personnel accidentally coming into contact with hot surfaces. Protection should be provided by the user to protect against accidental contact with hot surfaces. Failure to observe this precaution could result in bodily injury.

Lubrication Information

This is a ball or roller bearing motor. The bearings have been lubricated at the factory. Motors that do not have regrease capability are factory lubricated for the normal life of the bearings. **Washdown motors can not be lubricated**.

Lubricant

Baldor motors are pregreased, normally with Mobil Polyrex EM unless stated on nameplate. Do not mix lubricants due to possible incompatibility. Look for signs of lubricant incompatibility, such as extreme soupiness visible from the grease relief area. If other greases are preferred, check with local Baldor representative for recommendations.

Relubrication Intervals (For motors with regrease capability)

New motors that have been stored for a year or more should be relubricated. Lubrication is also recommended at these intervals.

LUBRICATION INSTRUCTIONS

Cleanliness is important in lubrication. Any grease used to lubricate anti friction bearings should be fresh and free from contamination. Properly clean the grease inlet area of the motor to prevent grease contamination.

1. Select service condition from Table 1.
2. Select lubrication frequency from Table 2.

LUBRICATION PROCEDURE

Bearings should be lubricated while stationary and the motor is warm.

1. Locate the grease inlet, clean the area, and replace the pipe plug with a grease fitting.
2. Locate and remove the grease drain plug, if provided.
3. Add the recommended volume of recommended lubricant until clean grease appears at the grease drain, at the grease relief, or along the shaft opening.
4. Replace the grease inlet plug and run the motor for two hours.
5. Replace the grease drain plug.

SPECIAL APPLICATIONS

For special temperature applications, consult your Baldor District Office.

Table 1 Service Conditions

Severity of Service	Ambient Temperature Maximum	Atmospheric Contamination	Type of Bearing
Standard	40° C	Clean, Little Corrosion	Deep Groove Ball Bearing
Severe	50° C	Moderate dirt, Corrosion	Ball Thrust, Roller
Extreme	>50° C* or Class H Insulation	Severe dirt, Abrasive dust, Corrosion	All Bearings
Low Temperature	<-30 ° C **		

* Special high temperature grease is recommended. ** Special low temperature grease is recommended.

Table 2 Lubrication Frequency (Ball Bearings)

NEMA / (IEC) Frame Size	Rated Speed ¿ RPM					
	10000	6000	3600	1800	1200	900
Up to 210 incl. (132)	**	2700 Hrs.	5500 Hrs.	12000 Hrs.	18000 Hrs.	22000 Hrs.
Over 210 to 280 incl. (180)		**	3600 Hrs.	9500 Hrs.	15000 Hrs.	18000 Hrs.
Over 280 to 360 incl. (225)		**	* 2200 Hrs.	7400 Hrs.	12000 Hrs.	15000 Hrs.
Over 360 to 5000 incl. (300)		**	*2200 Hrs.	3500 Hrs.	7400 Hrs.	10500 Hrs.

* Relubrication intervals are for ball bearings. For vertically mounted motors and roller bearings, divide the relubrication interval by 2.

** For motors operating at speeds greater than 3600 RPM, contact Baldor for relubrication recommendations.

Table 3 Lubrication Interval Multiplier

Severity of Service	Multiplier
Standard	1.0
Severe	0.5
Extreme	0.1
Low Temperature	1.0

Table 4 Amount of Grease to Add

Frame Size NEMA (IEC)	Bearing Description (Largest bearing in each frame size)					
	Bearing	OD D mm	Width B mm	Weight of grease to add ounce (gram)	Volume of grease to add	
					inches^3	teaspoon
Up to 210 incl. (132)	6307	80	21	0.30 (8.4)	0.6	2.0
Over 210 to 280 incl. (180)	6311	120	29	0.61 (17.4)	1.2	3.9
Over 280 to 360 incl. (200)	6313	140	33	0.81 (23.1)	1.5	5.2
Over 360 to 5000 incl. (300)	NU322	240	50	2.12 (60.0)	4.1	13.4

Weight in grams = 0.005 DB

Shaker Duty Motors only

Caution: Shaker Duty motors must be properly lubricated prior to Start Up to prevent damage. See Table 5.
Lubrication should be performed before Start Up and at regular maintenance intervals. Follow these recommendations to ensure proper lubrication.

Recommended Lubricant

For ambient temperatures between -15°F to 120°F the following lubricants are recommended:
Mobil PolyrexEM, Texaco Premium RB, Exxon Unirex N-2.
Do not mix greases unless compatibility has been checked and verified.

Table 5 Lubrication Volume

NEMA Frame Size	Volume in Cubic Inches					
	Normal Duty		Severe Duty		Extreme Duty	
	Start Up	Relub	Start Up	Relub	Start Up	Relub
184TY	1.4	0.5	1.4	0.5	2.7	0.5
215TY	1.6	0.5	1.6	0.5	4.5	1
256TY	7	1			11	2
286TY	9	1			15	3

Lubrication Frequency
Normal Duty 8 hours per day (16 hours per day in a clean environment). Lubricate every 2 months.
Severe Duty 16 hours per day or more in a dirty environment (corrosive atmosphere, chemical fumes, acids, alkalies or extreme high humidity). Lubricate every month or 700 hours of operation.
Extreme Duty operation in extremely dirty or dusty environments and high ambient temperatures exceeding 104°F (40°C). Lubricate twice a month or 350 hours of operation.

Lubrication Procedure
1. Locate the grease inlet and outlet. Clean the areas.
2. Remove the plug(s) and install a grease fitting in the inlet if grease fitting is not already installed.
3. Add the recommended amount of lubricant.
4. Run the motor for two hours with the outlet plug removed.
5. Install outlet plug.

Note: To loosen hardened grease it may be necessary to insert a rod or wire into the grease inlet and outlet holes.

Typical IEC vs NEMA Lead Marking

Single Phase Non-Reversible
Refer to the connection diagram provided on the Baldor motor.

Single Phase Reversible

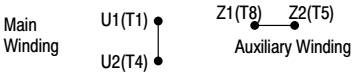

Dual Voltage Reversible

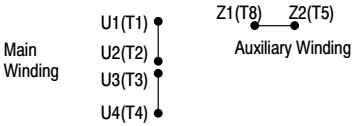

Three Phase
For single winding 3 phase motors, lead markings can be directly translated between IEC and NEMA designations.
For these motors, the lead markings are:

U1=T1	U2=T4	U3=T7	U4=T10
V1=T2	V2=T5	V3=T8	V4=T11
W1=T3	W2=T6	W3=T9	W4=T12

Refer to the connection diagram provided on the Baldor motor.
Some examples are as follows:

Three Leads

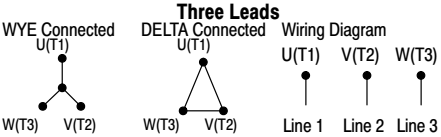

DC Motors
Lead markings can be translated between IEC and NEMA designations as follows:

	NEMA	IEC
Armature	A1, A2	A1, A2
Series Field	S2, S2	D1, D2
Shunt Field	F1, F2	E1, E2

Refer to the connection diagram provided on the Baldor motor.

Six Leads

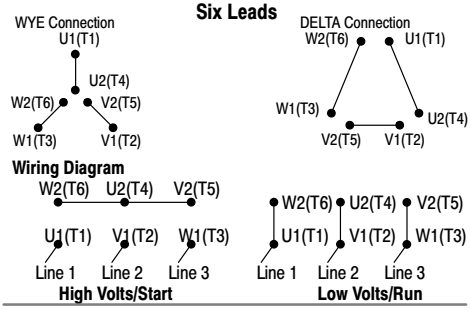

P.O. Box 2400 Fort Smith, AR 72902-2400 USA Ph: (1) 479.646.4711, Fax: (1) 479.648.5792
www.baldor.com

© Baldor Electric Company All Rights Reserved. Printed in USA
MN416 8/12