2 and 4 Wheel Dolly Kit

for *Portable Generators*

Installation & Operating Manual

4/10 MN2409

Any trademarks used in this manual are the property of their respective owners.

Table 1-1 Parts List

Assembly	Quantity PGD2	Quantity PGD4	Part Number	Description
Stationary Legs	2		TY2001A00	Support Leg
	2		RM1088A00	Rubber Isolator
	4			$^5/_{16}$–18 X 1” bolt
	4			$^5/_{16}$ Split Lock Washer
	4			$^5/_{16}$–18 Nut
	2			$^3/_8$ X 1–$^1/_4$” bolt
	2			$^3/_8$ Flat Washer
	2			$^3/_8$–20 Nut, Nyloc
Axle	2	4	HB6050A02	Axle Assembly
	2	4	TY3000A00	Pneumatic Wheel and Tire
	4	8		$^1/_8$ X 2” Cotter Pin
	4	8		$^5/_{16}$–18 X 3/4” bolt
	4	8		$^5/_{16}$ Split Lock Washer
	4	8		$^5/_{16}$–18 Nut
Handle	2		HB6050A01	Handle
	4		HB6050A00	Spacer for Handle
	2		HB6049A00	Bracket for Handle
	4		HW3514A06	1” U Bolt, $^1/_4$–20
	8			$^1/_4$ Flat Washer
	8			$^1/_4$–20 Nut
	4			$^5/_{16}$–18 X 3” bolt
	4			$^5/_{16}$ Flat Washer
	4			$^5/_{16}$–18 Nut, Nyloc

Optional 2 Wheel Kit PGD2 – 2 Wheel Dolly Kit

An optional 2 wheel dolly kit is available for portable generators. If you have purchased the PGD2 kit (Figure 1-1), these instructions will help you to install it.

1. If Dolly Kit is for a generator with a 16–18 HP Briggs and Stratton engine, a spark deflector (Baldor #EA0035A00) must be mounted over the screen–type arrester on the muffler to redirect sparks and heat away from the tire. (For models OHV85E, PC90VE, and PCM90VE). Contact Baldor if this part was not included in your Dolly Kit.
2. Raise and securely support both ends of generator set so it is 8” from floor.

Figure 1-1 Kit Components

Handle

Wheel/Axle Assembly

Stationary Leg

Note:
Wheel/Axle and Stationary Leg assemblies should be mounted as shown except for PC90VE and PCM90VE. For PC90VE and PCM90VE The Stationary Legs should be mounted on the Engine End.

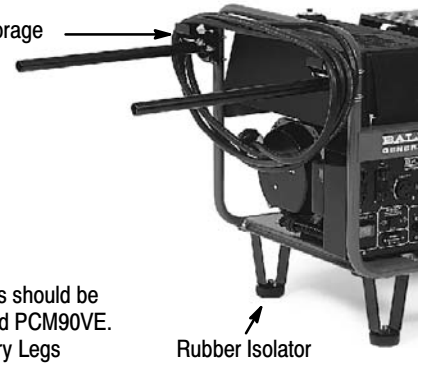

3. Assemble the Stationary Legs and mount one to each side of the Generator frame as shown in Figure 1-2A. Two legs must be assembled and mounted.

Note: The Stationary Legs should be mounted on the Generator End for all portable generators except the PC90VE. For the PC90VE, Assemble the Stationary Legs on the Engine End.

a. Attach one Rubber Isolator (RM1088A00) to each Stationary Leg. Use a $^3/_8$–16 X 1–$^1/_4$” bolt, 2 flat washers and nyloc nut, Figure 1-2.
b. Attach the Stationary Leg to the generator frame. Use two $^5/_{16}$–18 X 1” bolt, lock washer and nut.

Optional 2 Wheel Kit Continued

4. Install the two Axle assemblies as shown in Figure 1-2B.

Note: The axle assemblies should be mounted as far to the rear of the frame (away from handles) as possible to provide maximum stability.

a. Mount one axle to each side of the Generator frame as shown in Figure 1-2B. Use $^5/_{16}$–18 X $^3/_4$" bolt, lock washer and nut.

b. Insert cotter pin (1) in the hole closest to frame, bend the end of pin slightly to prevent it from falling out.

c. Slide the tire onto the axle.

d. Insert cotter pin (2) in the hole at outer edge of axle, bend the end of pin slightly to prevent it from falling out. Two axles must be assembled and secured to frame.

Figure 1-2

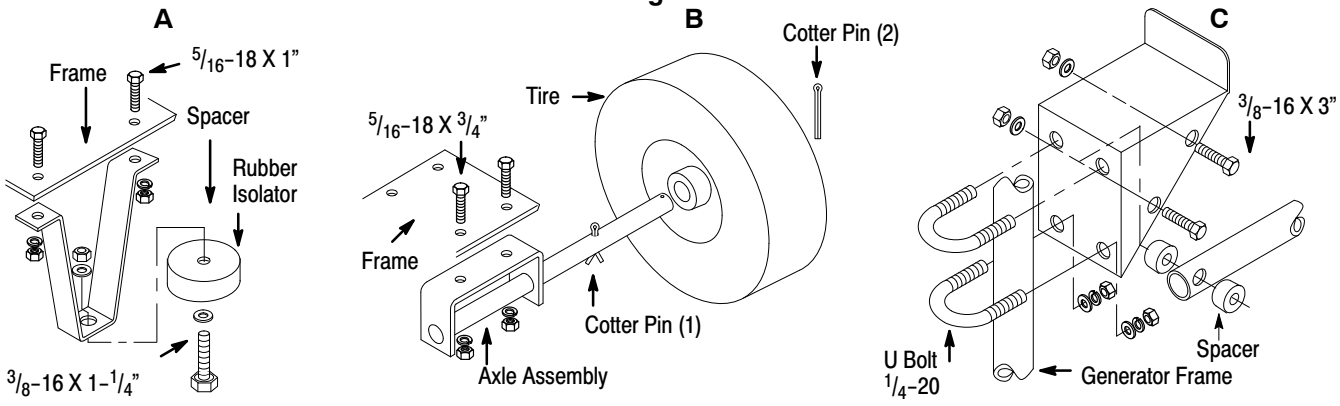

5. Assemble the two Handle assemblies and mount one to each side of the Generator frame as shown in Figure 1-2C. Two handles must be mounted.

Note: Position handle support so top clamp is just below frame side rail except on models OHV50 & 60 where bottom U bolt is just on top of frame side rail.

a. Attach each bracket to the generator frame. Use two U Bolt clamps, $^1/_4$ flat washers, $^1/_4$ lock washers and $^1/_4$–20 nuts.

b. Attach handle and two spacers (shown in Figure 1-2C) to bracket. Use $^5/_{16}$–18 X 3" Bolt, flat washer and nyloc nut.

c. Install a $^5/_{16}$–18 X 3" Bolt, flat washer and nyloc nut through the remaining upper hole in the side of the bracket. This bolt is a stop for the handle.

Optional 4 Wheel Kit PGD4 – 4 Wheel Dolly Kit

An optional 4 wheel dolly kit is available for portable generators. If you have purchased the PGD4 kit, these instructions will help you to install it.

Install the four Axle assemblies (shown in Figure 1-2B) as follows:

Note: The axle assemblies should be mounted as far to the rear of the frame (away from handles) as possible to provide maximum stability.

1. Raise and securely support both ends of generator set so it is 8" from floor.
2. Mount two axles on each side of the Generator frame as shown in Figure 1-2B. Use $^5/_{16}$–18 X $^3/_4$" bolt, lock washer and nut.
3. Insert cotter pin (1) in the hole closest to frame, bend the end of pin slightly to prevent it from falling out.
4. Slide the tire onto the axle.
5. Insert cotter pin (2) in the hole at outer edge of axle, bend the end of pin slightly to prevent it from falling out. Two axles must be assembled and secured to frame.

Baldor Sales Offices

UNITED STATES

ARIZONA
PHOENIX
4211 S 43RD PLACE
PHOENIX, AZ 85040
PHONE: 602-470-0407
FAX: 602-470-0464

ARKANSAS
CLARKSVILLE
1001 COLLEGE AVE.
CLARKSVILLE, AR 72830
PHONE: 479-754-9108
FAX: 479-754-9205

CALIFORNIA
LOS ANGELES
6480 FLOTILLA
COMMERCE, CA 90040
PHONE: 323-724-6771
FAX: 323-721-5859

HAYWARD
21056 FORBES STREET
HAYWARD, CA 94545
PHONE: 510-785-9900
FAX: 510-785-9910

COLORADO
DENVER
3855 FOREST STREET
DENVER, CO 80207
PHONE: 303-623-0127
FAX: 303-595-3772

CONNECTICUT
WALLINGFORD
65 SOUTH TURNPIKE ROAD
WALLINGFORD, CT 06492
PHONE: 203-269-1354
FAX: 203-269-5485

FLORIDA
TAMPA/PUERTO RICO/ VIRGIN ISLANDS
3906 EAST 11TH AVENUE
TAMPA, FL 33605
PHONE: 813-248-5078
FAX: 813-247-2984

GEORGIA
ATLANTA
62 TECHNOLOGY DR.
ALPHARETTA, GA 30005
PHONE: 770-772-7000
FAX: 770-772-7200

ILLINOIS
CHICAGO
4 SAMMONS COURT
BOLINGBROOK, IL 60440
PHONE: 630-296-1400
FAX: 630-226-9420

INDIANA
INDIANAPOLIS
5525 W. MINNESOTA STREET
INDIANAPOLIS, IN 46241
PHONE: 317-246-5100
FAX: 317-246-5110

IOWA
DES MOINES
1800 DIXON STREET, SUITE C
DES MOINES, IA 50316
PHONE: 515-263-6929
FAX: 515-263-6515

MARYLAND
BALTIMORE
6660 SANTA BARBARA RD.
SUITE 22-24
ELKRIDGE, MD 21075
PHONE: 410-579-2135
FAX: 410-579-2677

MASSACHUSETTS
BOSTON
6 PULLMAN STREET
WORCESTER, MA 01606
PHONE: 508-854-0708
FAX: 508-854-0291

MICHIGAN
DETROIT
5993 PROGRESS DRIVE
STERLING HEIGHTS, MI 48312
PHONE: 586-978-9800
FAX: 586-978-9969

MINNESOTA
MINNEAPOLIS
21080 134TH AVE. NORTH
ROGERS, MN 55374
PHONE: 763-428-3633
FAX: 763-428-4551

MISSOURI
ST LOUIS
422 INDUSTRIAL DRIVE
MARYLAND HEIGHTS, MO 63043
PHONE: 314-298-1800
FAX: 314-298-7660

KANSAS CITY
1501 BEDFORD AVENUE
NORTH KANSAS CITY, MO 64116
PHONE: 816-587-0272
FAX: 816-587-3735

NEW YORK
AUBURN
ONE ELLIS DRIVE
AUBURN, NY 13021
PHONE: 315-255-3403
FAX: 315-253-9923

NORTH CAROLINA
GREENSBORO
1220 ROTHERWOOD ROAD
GREENSBORO, NC 27406
PHONE: 336-272-6104
FAX: 336-273-6628

OHIO
CINCINNATI
2929 CRESCENTVILLE ROAD
WEST CHESTER, OH 45069
PHONE: 513-771-2600
FAX: 513-772-2219

CLEVELAND
8929 FREEWAY DRIVE
MACEDONIA, OH 44056
PHONE: 330-468-4777
FAX: 330-468-4778

OKLAHOMA
TULSA
7170 S. BRADEN, SUITE 140
TULSA, OK 74136
PHONE: 918-366-9320
FAX: 918-366-9338

OREGON
PORTLAND
20393 SW AVERY COURT
TUALATIN, OR 97062
PHONE: 503-691-9010
FAX: 503-691-9012

PENNSYLVANIA
PHILADELPHIA
1035 THOMAS BUSCH
MEMORIAL HIGHWAY
PENNSAUKEN, NJ 08110
PHONE: 856-661-1442
FAX: 856-663-6363

PITTSBURGH
159 PROMINENCE DRIVE
NEW KENSINGTON, PA 15068
PHONE: 724-889-0092
FAX: 724-889-0094

TENNESSEE
MEMPHIS
4000 WINCHESTER ROAD
MEMPHIS, TN 38118
PHONE: 901-365-2020
FAX: 901-365-3914

TEXAS
DALLAS
3040 QUEBEC
DALLAS, TX 75247
PHONE: 214-634-7271
FAX: 214-634-8874

HOUSTON
10355 W. LITTLE YORK RD.
SUITE 300
HOUSTON, TX 77041
PHONE: (281) 977-6500
FAX: (281) 977-6510

UTAH
SALT LAKE CITY
2230 SOUTH MAIN STREET
SALT LAKE CITY, UT 84115
PHONE: 801-832-0127
FAX: 801-832-8911

WISCONSIN
MILWAUKEE
1960 S. CALHOUN ROAD
NEW BERLIN, WI 53151
PHONE: 262-784-5940
FAX: 262-784-1215

INTERNATIONAL SALES
FORT SMITH, AR
P.O. BOX 2400
FORT SMITH, AR 72902
PHONE: 479-646-4711
FAX: 479-648-5895

CANADA
EDMONTON, ALBERTA
4053-92 STREET
EDMONTON, ALBERTA T6E 6R8
PHONE: 780-434-4900
FAX: 780-438-2600

TORONTO
OAKVILLE, ONTARIO
2750 COVENTRY ROAD
OAKVILLE, ONTARIO L6H 6R1
PHONE: 905-829-3301
FAX: 905-829-3302

MONTREAL, QUEBEC
5155, J.A. BOMBARDIER
ST-HUBERT (QUÉBEC) CANADA
J3Z 1G4
PHONE: 514-933-2711
FAX: 514-933-8639

VANCOUVER, BRITISH COLUMBIA
1538 KEBET WAY
PORT COQUITLAM,
BRITISH COLUMBIA V3C 5M5
PHONE 604-421-2822
FAX: 604-421-3113

WINNIPEG, MANITOBA
54 PRINCESS STREET
WINNIPEG, MANITOBA R3B 1K2
PHONE: 204-942-5205
FAX: 204-956-4251

AUSTRALIA
UNIT 3, 6 STANTON ROAD
SEVEN HILLS, NSW 2147, AUSTRALIA
PHONE: (61) (2) 9674 5455
FAX: (61) (2) 9674 2495

UNIT 8, 5 KELLETTS ROAD
ROWVILLE, VICTORIA, 3178 AUSTRALIA
PHONE: (61) (3) 9753 4355
FAX: (61) (3) 9753 4366

EL SALVADOR
RESIDENCIAL PINARES DE SUIZA
POL. 15 #44,
NVA. SAN SALVADOR, EL SALVADOR
PHONE: +503 2288-1519
FAX: +503 2288-1518

CHILE
LUIS THAYER OJEDA 166,
OF 402 - PROVIDENCIA
SANTIAGO, CHILE
PHONE: +56 2 816 9900

CHINA
160 SONG SHENG ROAD
SONGJIANG INDUSTRY ZONE
SHANGHAI 201613, CHINA
PHONE: +86 21 5760 5335
FAX : +86 21 5760 5336

GERMANY
DIESELSTRASSE 22
D-85551 KIRCHHEIM
MUNICH, GERMANY
PHONE: +49 89 90 5080
FAX: +49 89 90 50 8492

INDIA
14, COMMERCE AVENUE
MAHAGANESH COLONY
PAUD ROAD
PUNE - 411038
MAHARASHTRA, INDIA
PHONE: +91 20 25 45 27 17 / 18
FAX: +91 20 25 45 27 19

INDONESIA
TALAVERA OFFICE PARK,
28TH FLOOR, SUITE M18
JI. T.B. SIMATUPANG, KAV. 22-26
JAKARTA 12430, INDONESIA
PHONE: +62 21 7599 9879
FAX: + 62 21 7599 9878

ITALY
BALDOR ASR AG
SUCCURSALE DI MENDRISIO
VIA BORROMINI, 20A
CH-6850 MENDRISIO
SWITZERLAND
PHONE: 0041 91 640 99 50
FAX: 0041 91 630 26 33

JAPAN
DIA BLDG 802,
2-21-1 TSURUYA-CHO,
KANAGAWA-KU
YOKOHAMA, 221-0835, JAPAN
PHONE: 81-45-412-4506
FAX: 81-45-412-4507

MEXICO
LEON, GUANAJUATO
KM. 2.0 BLVD. AEROPUERTO
LEÓN 37545, GUANAJUATO, MÉXICO
PHONE: +52 477 761 2030
FAX: +52 477 761 2010

MIDDLE EAST & NORTH AFRICA
VSE INTERNATIONAL CORP.
P. O. BOX 5618
BUFFALO GROVE, IL 60089-5618
PHONE: 847 590 5547
FAX: 847 590 5587

PANAMA
AVE. RICARDO J. ALFARO
EDIFICIO SUN TOWERS MALL
PISO 2, LOCAL 55
CIUDAD DE PANAMÁ, PANAMÁ
PHONE: +507 236-5155
FAX: +507 236-0591

SINGAPORE
18 KAKI BUKIT ROAD 3, #03-09
ENTREPRENEUR BUSINESS CENTRE
SINGAPORE 415978
PHONE: (65) 6744 2572
FAX: (65) 6747 1708

SWITZERLAND
POSTFACH 73
SCHUTZENSTRASSE 59
CH-8245 FEUERTHALEN
SWITZERLAND
PHONE: +41 52 647 4700
FAX: +41 52 659 2394

TAIWAN
1F, NO 126 WENSHAN 3RD STREET,
NANTUN DISTRICT,
TAICHUNG CITY 408
TAIWAN R.O.C
PHONE: (886) 4 238 04235
FAX: (886) 4 238 04463

UNITED KINGDOM
6 BRISTOL DISTRIBUTION PARK
HAWKLEY DRIVE
BRISTOL BS32 0BF U.K.
PHONE: +44 1454 850000
FAX: +44 1454 859001

VENEZUELA
AV. ROMA. QTA EL MILAGRO. URB.
CALIFORNIA NORTE
CARACAS, 1070
VENEZUELA
PHONE/FAX: +58 212 272 7343
MOBILE: +58 414 114 8623

BALDOR®

BALDOR ELECTRIC COMPANY
World Headquarters
P.O. Box 2400 Fort Smith, AR 72901–2400
(479) 646–4711 Fax (479) 648–5792
www.baldor.com

2409-0410

REGISTERED COMPANY ISO 9001 SGS

© Baldor Electric Company

MN2409

All rights reserved. Printed in USA

4/10