DODGE®

BEARINGS

Dodge Type EXL Bearing

The new Dodge Type EXL bearing extends the life of mounted bearings by providing superior sealing, misalignment and expansion capability as well as the highest load ratings in the industry. Additionally, the split ductile iron housings are dimensionally interchangeable with all "Type E" dimensioned products.

Standard Features:

- "Type E" mounting dimensions
- Bore sizes available from 1-3/16" to 5"
- Split housed, 2 and 4 bolt pillow blocks
- Expansion and non-expansion
- XTS-triple lip sealing system
- Dodge manufactured tapered roller bearings
- High strength ductile iron housings
- +/- 4° of misalignment capability

Type EXL Features

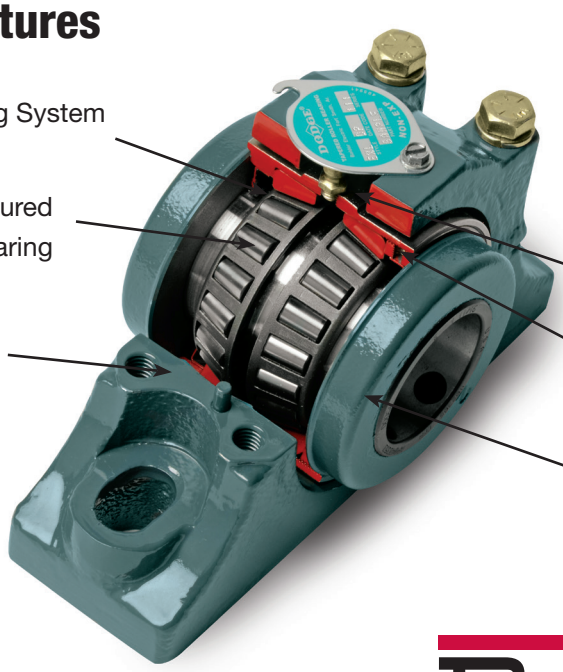

BALDOR®
A MEMBER OF THE ABB GROUP

Type EXL Sealing

Xtra Tough Sealing

MADE IN THE USA

Importance of Sealing:

- 80% of mounted bearing failures in the industry involve liquid or solid contamination or lubrication related problems
- Obstructs contaminant entry
- Retains essential lubrication
- Increases the service life of the bearing

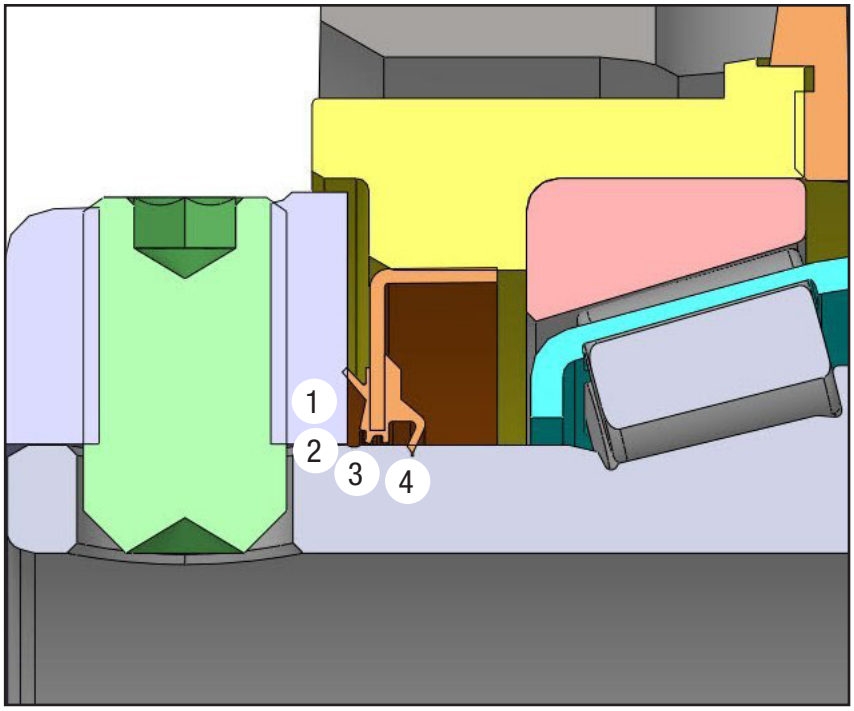

XTS Sealing System

- Standard on all Type EXL Bearings
- Proven performance in tough environments
- Two times more effective then competitors dual lip seal

1. Collar-riding seal lip provides the first level of defense against contaminants
2. Trash guard protects inner seals
3. Primary contact seal protects internal components and helps retain grease
4. Contact seal for grease retention and secondary trash guard for increased protection

Type EXL Pillow Block

2-Bolt Base

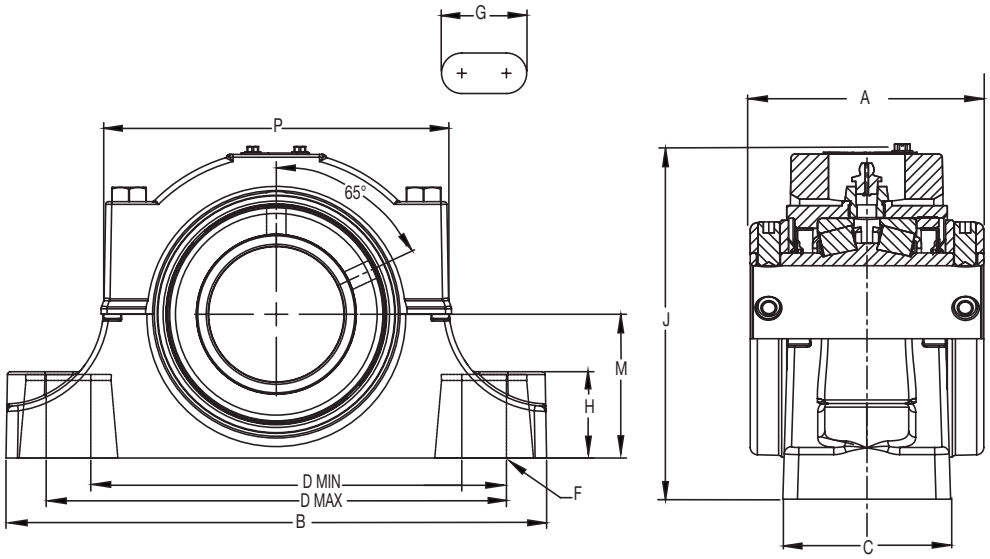

Shaft Size	Non-Expansion Part No.	Part Name	Expansion Part No.	Part Name
1-3/16	**077221**	P2B-EXL-103R	**077244**	P2B-EXL-103RE
1-1/4	**077222**	P2B-EXL-104R	**077245**	P2B-EXL-104RE
1-3/8	**077223**	P2B-EXL-106R	**077246**	P2B-EXL-106RE
1-7/16	**077224**	P2B-EXL-107R	**077247**	P2B-EXL-107RE
1-1/2	**077225**	P2B-EXL-108R	**077248**	P2B-EXL-108RE
1-5/8	**077226**	P2B-EXL-110R	**077249**	P2B-EXL-110RE
1-11/16	**077227**	P2B-EXL-111R	**077250**	P2B-EXL-111RE
1-3/4	**077228**	P2B-EXL-112R	**077251**	P2B-EXL-112RE
1-7/8	**077229**	P2B-EXL-114R	**077252**	P2B-EXL-114RE
1-15/16	**077230**	P2B-EXL-115R	**077253**	P2B-EXL-115RE
2	**077231**	P2B-EXL-200R	**077254**	P2B-EXL-200RE
2-3/16	**077232**	P2B-EXL-203R	**077255**	P2B-EXL-203RE
2-1/4	**077233**	P2B-EXL-204R	**077256**	P2B-EXL-204RE
2-7/16	**077234**	P2B-EXL-207R	**077257**	P2B-EXL-207RE
2-1/2	**077235**	P2B-EXL-208R	**077258**	P2B-EXL-208RE
2-11/16	**077236**	P2B-EXL-211R	**077259**	P2B-EXL-211RE
2-3/4	**077237**	P2B-EXL-212R	**077260**	P2B-EXL-212RE
2-15/16	**077238**	P2B-EXL-215R	**077261**	P2B-EXL-215RE
3	**077239**	P2B-EXL-300R	**077262**	P2B-EXL-300RE
3-3/16	**077240**	P2B-EXL-303R	**077263**	P2B-EXL-303RE
3-1/4	**077241**	P2B-EXL-304R	**077264**	P2B-EXL-304RE
3-7/16	**077242**	P2B-EXL-307R	**077265**	P2B-EXL-307RE
3-1/2	**077243**	P2B-EXL-308R	**077266**	P2B-EXL-308RE

Type EXL Pillow Block

2-Bolt Base

Shaft Size	Weight lbs (Approx)	A	B	C	D		F Bolt Dia.
					Min	Max	
1-3/16	10	2.75	6.25	1.88	4.56	4.94	1/2
1-1/4	10						
1-3/8	12	3.00	7.25	2.19	5.31	5.94	1/2
1-7/16	12						
1-1/2	12	3.38	7.75	2.37	5.56	6.44	1/2
1-5/8	15						
1-11/16	15						
1-3/4	15	3.50	8.88	2.54	6.31	7.19	5/8
1-7/8	19						
1-15/16	19						
2	19						
2-3/16	24	3.75	9.62	2.63	6.69	7.94	5/8
2-1/4	24	4.00	10.38	2.88	6.94	8.69	5/8
2-7/16	29						
2-1/2	29						
2-11/16	42	4.50	11.75	3.32	8.06	10.00	3/4
2-3/4	42						
2-15/16	43						
3	43						
3-3/16	73	5.00	13.75	4.00	10.12	11.75	7/8
3-1/4	73						
3-7/16	73						
3-1/2	73						

Shaft Size	Weight lbs (Approx)	G	H	J	L	M	P	EXP ✳
1-3/16	10	0.75	0.88	3.51	2.25	1.50	4.06	5/16
1-1/4	10							
1-3/8	12	0.94	1.13	4.17	2.75	1.88	4.63	5/16
1-7/16	12							
1-1/2	12	1.07	1.25	4.69	3.19	2.13	5.13	5/16
1-5/8	15							
1-11/16	15							
1-3/4	15	0.19	1.31	4.99	3.44	2.25	5.56	9/32
1-7/8	19							
1-15/16	19							
2	19							
2-3/16	24	1.37	1.50	5.42	3.75	2.50	6.00	9/32
2-1/4	24	1.63	1.63	6.08	4.06	2.75	6.41	9/32
2-7/16	29							
2-1/2	29							
2-11/16	42	1.85	1.88	6.77	4.72	3.13	7.50	9/32
2-3/4	42							
2-15/16	43							
3	43							
3-3/16	73	1.82	2.25	7.97	5.50	3.75	9.31	9/32
3-1/4	73							
3-7/16	73							
3-1/2	73							

✳ EXP. Total Expansion Divided Equally On Both Sides Of Bearing (Expansion Bearing Only)

Type EXL Pillow Block

4-Bolt Base

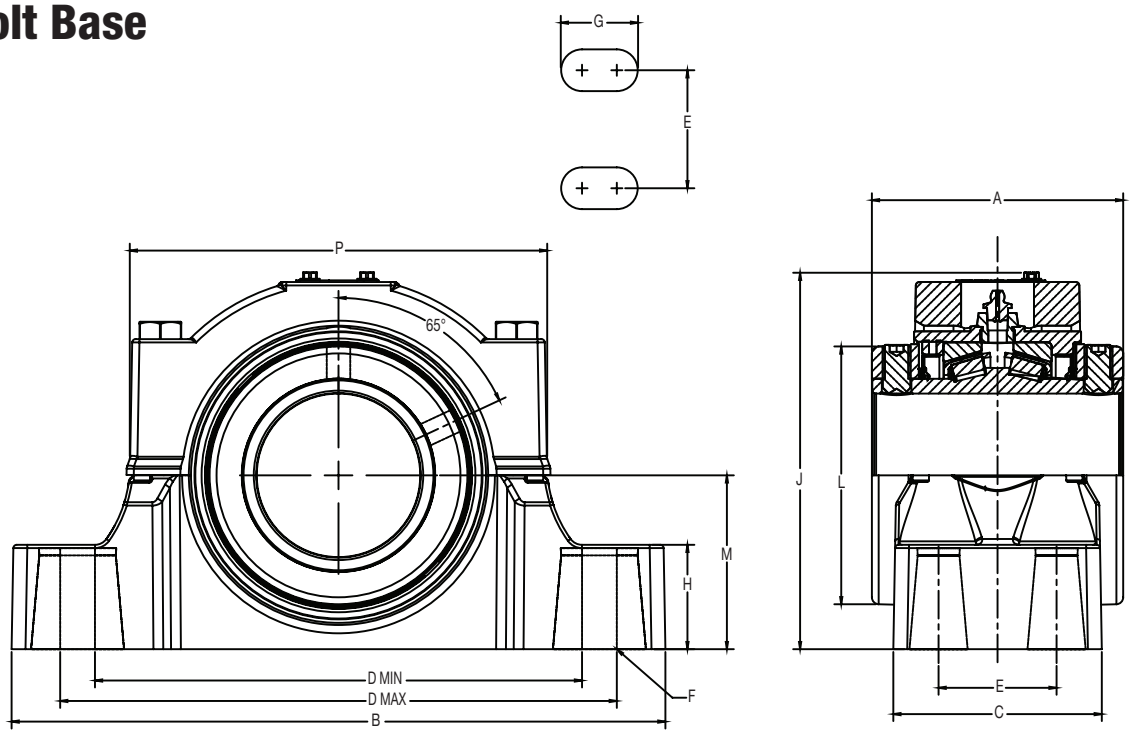

Shaft Size	Non-Expansion Part No.	Part Name	Expansion Part No.	Part Name
2-1/4	**077267**	P4B-EXL-204R	**077284**	P4B-EXL-204RE
2-7/16	**077268**	P4B-EXL207R	**077285**	P4B-EXL-207RE
2-1/2	**077269**	P4B-EXL-208R	**077286**	P4B-EXL-208RE
2-11/16	**077270**	P4B-EXL-211R	**077287**	P4B-EXL-211RE
2-3/4	**077271**	P4B-EXL-212R	**077288**	P4B-EXL-212RE
2-15/16	**077272**	P4B-EXL-215R	**077289**	P4B-EXL-215RE
3	**077273**	P4B-EXL-300R	**077290**	P4B-EXL-300RE
3-3/16	**077274**	P4B-EXL-303R	**077291**	P4B-EXL-303RE
3-1/4	**077275**	P4B-EXL-304R	**077292**	P4B-EXL-304RE
3-7/16	**077276**	P4B-EXL-307R	**077293**	P4B-EXL-307RE
3-1/2	**077277**	P4B-EXL-308R	**077294**	P4B-EXL-308RE
3-15/16	**077278**	P4B-EXL-315R	**077295**	P4B-EXL-315RE
4	**077279**	P4B-EXL-400R	**077296**	P4B-EXL-400RE
4-7/16	**077280**	P4B-EXL-407R	**077297**	P4B-EXL-407RE
4-1/2	**077281**	P4B-EXL-408R	**077298**	P4B-EXL-408RE
4-15/16	**077282**	P4B-EXL-415R	**077299**	P4B-EXL-415RE
5	**077283**	P4B-EXL-500R	**077300**	P4B-EXL-500RE

Type EXL Pillow Block

4-Bolt Base

Shaft Size	Weight lbs (Approx.)	A	B	C	D		E	F Bolts Dia.
					Min	Max		
2-1/4	29	4.00	10.38	3.50	7.75	8.25	1.88	5/8
2-7/16	29							
2-1/2	29							
2-11/16	42	4.50	11.75	3.75	8.75	10.00	2.12	5/8
2-3/4	42							
2-15/16	42							
3	42							
3-3/16	73	5.00	13.75	4.50	10.56	11.75	2.38	3/4
3-1/4	73							
3-7/16	73							
3-1/2	73							
3-15/16	109	6.25	15.25	4.74	11.00	13.00	2.25	3/4
4	109							
4-7/16	154	6.75	16.50	5.08	12.00	13.88	2.50	3/4
4-1/2	154							
4-15/16	192	7.25	18.50	5.66	13.50	15.88	2.88	3/4
5	192							

Shaft Size	Weight lbs (Approx.)	G	H	J	L	M	P	EXP ✳
2-1/4	29	1.25	1.63	6.08	4.06	2.75	6.41	9/32
2-7/16	29							
2-1/2	29							
2-11/16	42	1.38	1.88	6.77	4.72	3.13	7.50	9/32
2-3/4	42							
2-15/16	42							
3	42							
3-3/16	73	1.48	2.25	7.97	5.50	3.75	9.31	9/32
3-1/4	73							
3-7/16	73							
3-1/2	73							
3-15/16	109	1.88	2.44	8.81	6.00	4.25	10.08	9/32
4	109							
4-7/16	154	1.82	2.75	9.79	6.45	4.75	11.08	9/32
4-1/2	154							
4-15/16	192	2.23	3.00	11.36	7.45	5.50	12.71	9/32
5	192							

✳ EXP - Total Expansion Divided Equally On Both Sides Of Bearing (Expansion Bearings Only)

Type EXL S-1 UNIT

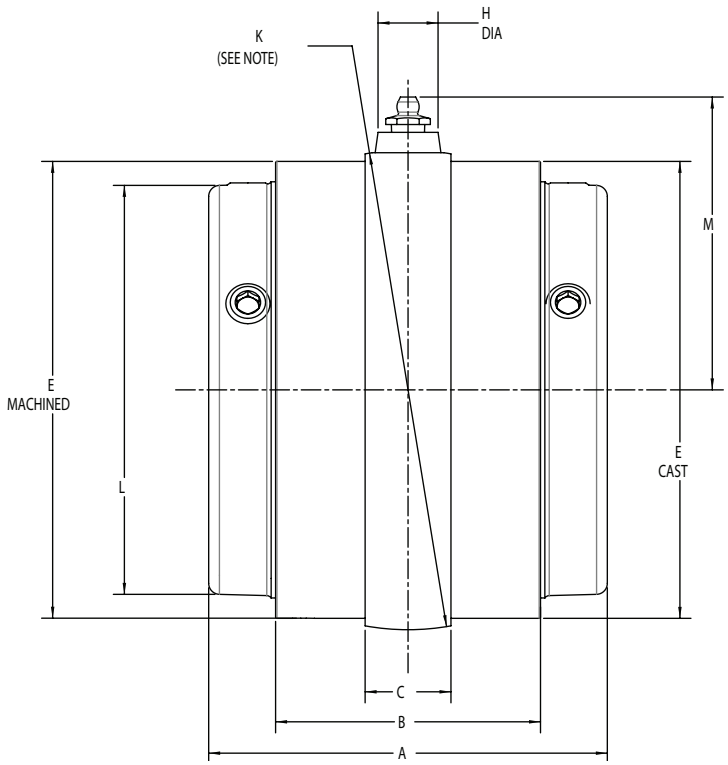

Shaft Size	Part Number	Part Name	Weight lbs (Approx.)	A	B	C	E	K *	L	M
1-3/16	**077192**	S1U-EXL-103R	3	2.75	1.88	0.56	2.51	2.6370	2.25	1.66
1-1/4	**077193**	S1U-EXL-104R	3							
1-3/8	**077194**	S1U-EXL-106R	4	3.00	2.06	0.62	3.03	3.2000	2.75	1.94
1-7/16	**077195**	S1U-EXL-107R	4							
1-1/2	**077196**	S1U-EXL-108R	4	3.38	2.31	0.75	3.49	3.6920	3.19	2.19
1-5/8	**077197**	S1U-EXL-110R	6							
1-11/16	**077198**	S1U-EXL-111R	6							
1-3/4	**077199**	S1U-EXL-112R	6	3.50	2.44	0.82	3.75	3.9650	3.44	2.38
1-7/8	**077200**	S1U-EXL-114R	6							
1-15/16	**077201**	S1U-EXL-115R	7							
2	**077202**	S1U-EXL-200R	7							
2-3/16	**077203**	S1U-EXL-203R	9	3.75	2.56	0.84	4.22	4.4380	3.75	2.61
2-1/4	**077204**	S1U-EXL-204R	11	4.00	2.75	0.85	4.56	4.7810	4.06	3.04
2-7/16	**077205**	S1U-EXL-207R	11							
2-1/2	**077206**	S1U-EXL-208R	11							
2-11/16	**077207**	S1U-EXL-211R	16	4.50	3.00	0.98	5.17	5.4325	4.72	3.37
2-3/4	**077208**	S1U-EXL-212R	16							
2-15/16	**077209**	S1U-EXL-215R	16							
3	**077210**	S1U-EXL-300R	16							
3-3/16	**077211**	S1U-EXL-303R	30	5.00	3.50	1.12	6.30	6.5940	5.50	3.95
3-1/4	**077212**	S1U-EXL-304R	30							
3-7/16	**077213**	S1U-EXL-307R	30							
3-1/2	**077214**	S1U-EXL-308R	30							
3-15/16	**077215**	S1U-EXL-315R	42	6.25	4.50	1.56	6.84	7.2640	6.00	4.28
4	**077216**	S1U-EXL-400R	42							
4-7/16	**077217**	S1U-EXL-407R	56	6.75	4.63	1.63	7.56	8.0000	6.45	4.65
4-1/2	**077218**	S1U-EXL-408R	56							
4-15/16	**077219**	S1U-EXL-415R	81	7.25	5.13	1.87	8.79	9.2900	7.45	5.30
5	**077220**	S1U-EXL-500R	81							

* ±.0005

Type EXL Competitor Interchange

2-Bolt Pillow Blocks

Dodge PN	Description	Sealmaster RPB
077221	P2B-EXL-103R	RPB-103-2
077244	P2B-EXL-103RE	N/A
077222	P2B-EXL-104R	RPB-104-2
077245	P2B-EXL-104RE	N/A
077223	P2B-EXL-106R	RPB-106-2
077246	P2B-EXL-106RE	N/A
077224	P2B-EXL-107R	RPB-107-2
077247	P2B-EXL-107RE	N/A
077225	P2B-EXL-108R	RPB-108-2
077248	P2B-EXL-108RE	N/A
077226	P2B-EXL-110R	RPB-110-2
077249	P2B-EXL-110RE	N/A
077227	P2B-EXL-111R	RPB-111-2
077250	P2B-EXL-111RE	N/A
077228	P2B-EXL-112R	RPB-112-2
077251	P2B-EXL-112RE	ERPB-112-2
077229	P2B-EXL-114R	N/A
077252	P2B-EXL-114RE	N/A
077230	P2B-EXL-115R	RPB-115-2
077253	P2B-EXL-115RE	ERPB-115-2
077231	P2B-EXL-200R	RPB-200-2
077254	P2B-EXL-200RE	ERPB-200-2
077232	P2B-EXL-203R	RPB-203-2
077255	P2B-EXL-203RE	ERPB-203-2
077233	P2B-EXL-204R	RPB-204-2
077256	P2B-EXL-204RE	ERPB-204-2
077234	P2B-EXL-207R	RPB-207-2
077257	P2B-EXL-207RE	ERPB-207-2
077235	P2B-EXL-208R	RPB-208-2
077258	P2B-EXL-208RE	ERPB-208-2
077236	P2B-EXL-211R	RPB-211-2
077259	P2B-EXL-211RE	ERPB-211-2
077237	P2B-EXL-212R	RPB-212-2
077260	P2B-EXL-212RE	ERPB-212-2
077238	P2B-EXL-215R	RPB-215-2
077261	P2B-EXL-215RE	ERPB-215-2
077239	P2B-EXL-300R	RPB-300-2
077262	P2B-EXL-300RE	ERPB-300-2
077240	P2B-EXL-303R	RPB-303-2
077263	P2B-EXL-303RE	ERPB-303-2
077241	P2B-EXL-304R	N/A
077264	P2B-EXL-304RE	N/A
077242	P2B-EXL-307R	RPB-307-2
077265	P2B-EXL-307RE	ERPB-307-2
077243	P2B-EXL-308R	RPB-308-2
077266	P2B-EXL-308RE	ERPB-308-2

4-Bolt Pillow Blocks

Dodge PN	Description	Sealmaster RPB
077267	P4B-EXL-204R	RPB-204-4
077284	P4B-EXL-204RE	ERPB-204-4
077268	P4B-EXL-207R	RPB-207-4
077285	P4B-EXL-207RE	N/A
077269	P4B-EXL-208R	RPB-208-4
077286	P4B-EXL-208RE	N/A
077270	P4B-EXL-211R	RPB-211-4
077287	P4B-EXL-211RE	N/A
077271	P4B-EXL-212R	RPB-212-4
077288	P4B-EXL-212RE	N/A
077272	P4B-EXL-215R	RPB-215-4
077289	P4B-EXL-215RE	N/A
077273	P4B-EXL-300R	RPB-300-4
077290	P4B-EXL-300RE	N/A
077274	P4B-EXL-303R	RPB-303-4
077291	P4B-EXL-303RE	N/A
077275	P4B-EXL-304R	N/A
077292	P4B-EXL-304RE	N/A
077276	P4B-EXL-307R	RPB-307-4
077293	P4B-EXL-307RE	N/A
077277	P4B-EXL-308R	RPB-308-4
077294	P4B-EXL-308RE	N/A
077278	P4B-EXL-315R	RPB-315-4
077295	P4B-EXL-315RE	ERPB-315-4
077279	P4B-EXL-400R	RPB-400-4
077296	P4B-EXL-400RE	ERPB-400-4
077280	P4B-EXL-407R	RPB-407-4
077297	P4B-EXL-407RE	ERPB-407-4
077281	P4B-EXL-408R	RPB-408-4
077298	P4B-EXL-408RE	ERPB-408-4
077282	P4B-EXL-415R	RPB-415-4
077299	P4B-EXL-415RE	ERPB-415-4
077283	P4B-EXL-500R	RPB-500-4
077300	P4B-EXL-500RE	ERPB-500-4

"E" in Nomenclature Indicates Expansion Bearing

Replacement Inner Units

Dodge PN	Description
077192	S1U-EXL-103R
077193	S1U-EXL-104R
077194	S1U-EXL-106R
077195	S1U-EXL-107R
077196	S1U-EXL-108R
077197	S1U-EXL-110R
077198	S1U-EXL-111R
077199	S1U-EXL-112R
077200	S1U-EXL-114R
077201	S1U-EXL-115R
077202	S1U-EXL-200R
077203	S1U-EXL-203R
077204	S1U-EXL-204R
077205	S1U-EXL-207R
077206	S1U-EXL-208R
077207	S1U-EXL-211R
077208	S1U-EXL-212R
077209	S1U-EXL-215R
077210	S1U-EXL-300R
077211	S1U-EXL-303R
077212	S1U-EXL-304R
077213	S1U-EXL-307R
077214	S1U-EXL-308R
077215	S1U-EXL-315R
077216	S1U-EXL-400R
077217	S1U-EXL-407R
077218	S1U-EXL-408R
077219	S1U-EXL-415R
077220	S1U-EXL-500R

*Inner Unit used for both Expansion and Non-Expansion Housings

BALDOR
A MEMBER OF THE ABB GROUP

P.O. Box 2400, Fort Smith, AR 72902-2400 U.S.A., Ph: (1) 479.646.4711, Fax (1) 479.648.5792, International Fax (1) 479.648.5895
Baldor - Dodge
6040 Ponders Court, Greenville, SC 29615-4617 U.S.A., Ph: (1) 864.297.4800, Fax: (1) 864.281.2433
www.baldor.com

© Baldor Electric Company
All Rights Reserved. Printed in USA.
FL3030
9/12 TCP 5000