ACB530
AC DRIVES

The versatile drive designed to handle your most complex sensorless vector applications in an easy to configure product.

Built with popular ABB inverter technology, the Baldor ACB530 is a product designed to tackle difficult and demanding applications while providing an interface to the user that is simple and intuitive. The ACB530 is a sensorless vector product that controls motor speed with the precision and responsiveness needed to accomplish most applications where open loop vector control is desirable.

Features

- Input Voltages / Power Ratings
  208 -240 Vac 3-phase /.75-100 Hp
  380-480 Vac 3-phase / 1-550 Hp
  500-600 Vac 3-phase / 1.5-150 Hp
- Enclosures / Mounting
  NEMA 1 (1 ~ 200 Hp)
  Optional NEMA 12
- Control Modes
  V/Hz
  Sensorless Vector
- User-friendly keypad with full-graphics backlit LCD display
  Parameter upload / download capability
  Application macros and assistants
  Help text available for all screens
  Remote mountable
- PID Control Loop with 2 inputs
- Normal duty and heavy duty ratings
- Built-in Modbus RTU protocol (RS485)

Specifications

- Digital Inputs (6), 12 - 24 Vdc sink / source, internal / external power source
- Relay Outputs (3) N.O. / N.C. (Form C)
- Analog Inputs (2)
  Unipolar 4 ~ 20mA
- Environmental
  15 - 40 (higher available w/derate)
  1000 Altitude w/o derate
  Lower than 95% Humidity, non-dondensing NEMA 1 models
- Electrical
  Input voltage +10 - 15% of nominal, 48 ~ 63 Hz
  Operational on single-phase input with derate
- Output ratings
  0 ~ 500Hz Output Frequency
  1KHz, 4KHz, 8KHz, 12KHz Switching Frequency
  110% Overload Normal Duty Ratings - 1 minute
  150% Overload Heavy Duty Ratings - 1 minute
  180% Overload 2 Second Capability
  4 to 16KHz switching frequency

BALDOR®

A MEMBER OF THE ABB GROUP

ACB530 Catalog Number Definition

Type designation: ACB530 - U1 - 08A8 - 4 + B055

Product series

Output Current Rating

Voltage Rating
2 = 208-240 VAC
4 = 380-480 VAC
6 = 500-600 VAC

Construction (Region Specific)
U1 = US Specific and UL Compliance

Options
B055 = UL Type 12 / IP54

Agency Certifications / Listings:

- UL
- CSA
- cUL
- C-Tick
- CE

ACB530 Connections

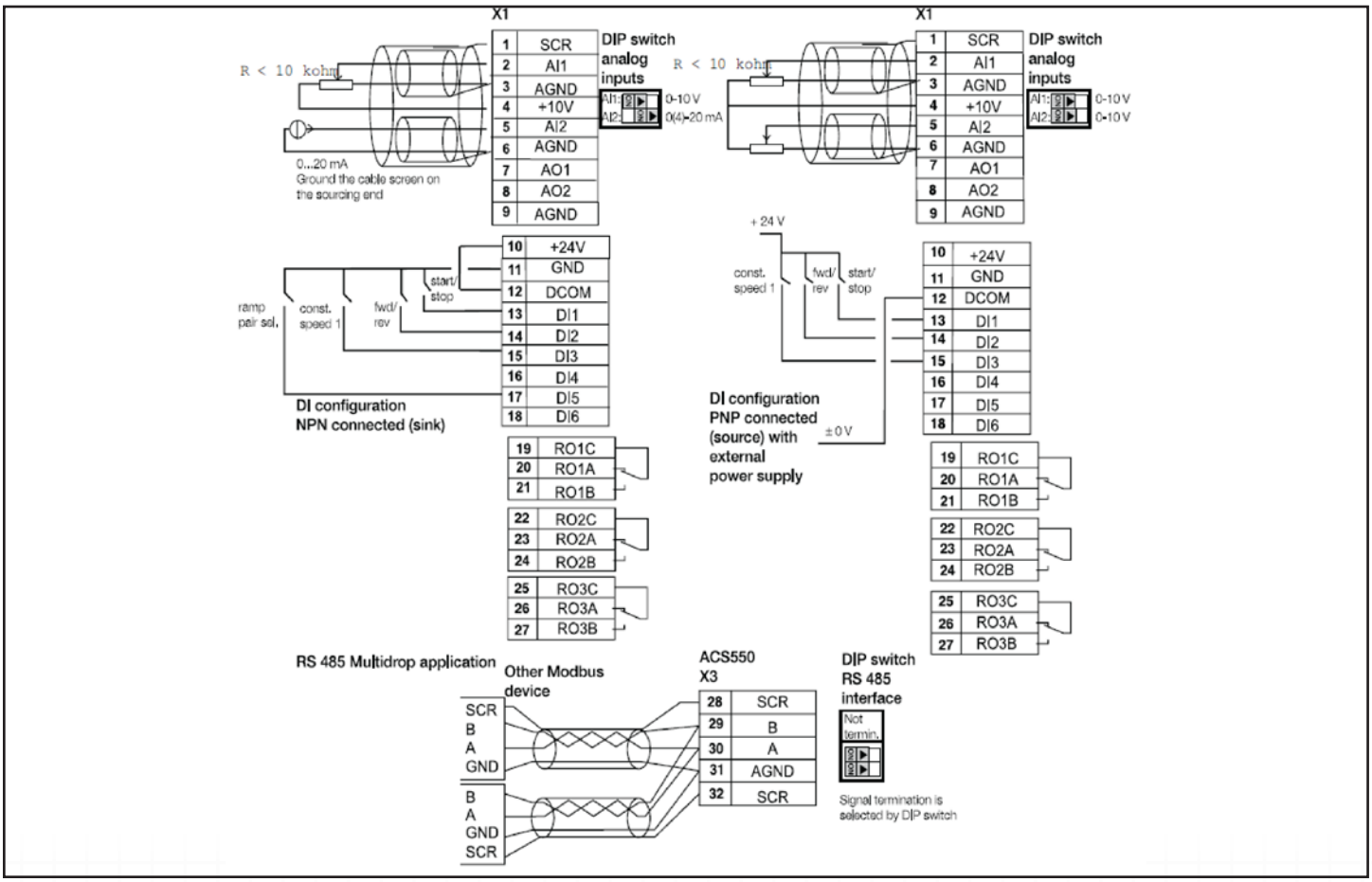

BALDOR®
A MEMBER OF THE ABB GROUP

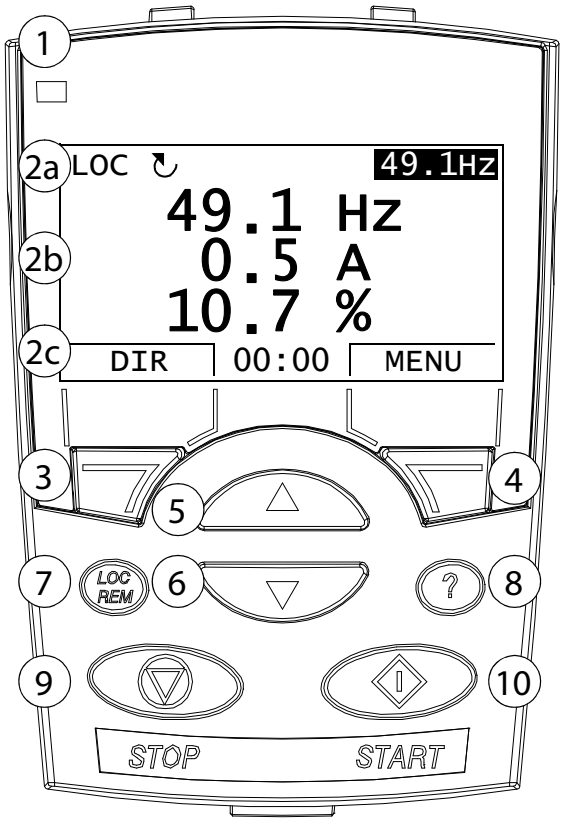

Operation – Using the Keypad:

1. Status LED - Green for normal operation
2. LCD Display - Three Main Areas
   2a. Status Line - depends on operating mode
   2b. Center - signal and parameter value
   2c. Bottome Line - current function
3. Soft Key 1 - function depends on the context
4. Soft Key 2 - function depends on the context
5. Up - scrolls up through the menu
6. Down - scrolls down through the menu
7. Loc/Rem - changes between Local or Remote
8. Help - displays context sensitive information
9. Stop - stops the drive in local control
10. Start - starts the drive in local control

Optional Equipment and Accesories

Option	Field Kit Code
115 / 230V Digital input interface	OHDI-01-KIT
Cabinet Panel Mounting	OPMP-01
Panel Extension Cable	OCAT-01
Countrol Panel Mounting	ACS/H-CP-EXT
NEMA 4X Cabinet Panel Mounting	ACS/H-CP-EXT-IP66
Flange Mounting Kits	FMK-A-R1 FMK-A-R2 FMK-A-R3 FMK-A-R4 AC8-FLNGMT-R5 AC8-FLNGMT-R6

FIELDBUS Communications Options

DeviceNet Adaptor	RDNA-01-KIT
ProfiBus-DP Adaptor	RPBA-01-KIT
ControlNet Adaptor	RCNA-01-KIT
Ethernet Adaptor	RETA-01-KIT
EtherCAT Adaptor	RECA-01-KIT

Additional Features

- RS485 ports standard on every drive
- Real time clock for logging events in drive memory
- Fault trace capability to determine several key operating conditions captured at the time of fault
- Quick Setup Display
  Control type (V / Hz / Sensorless Vector)
  Motor rated volts
  Motor rated amps
  Motor rated base speed
  Motor rated frequency
  Calculate motor model
  Acceleration time
  Deceleration time
  Minimum speed
  Maximum speed

BALDOR®
A MEMBER OF THE ABB GROUP

Ratings and Dimensions:

Ratings Normal Duty		Type Code UL Type 1 (NEMA 1)	Frame Size	UL Type 1 / IP21			
P_N Hp	I_{2N} A			H in	W in	D in	Weight lb
3-phase supply voltage 208, 230 or 240 V							
2	7.5	ACB530-U1-07A5-2	R1	13.0	4.9	8.3	14.3
3	11.8	ACB530-U1-012A-2	R1	13.0	4.9	8.3	14.3
5	16.7	ACB530-U1-017A-2	R1	13.0	4.9	8.3	14.3
7.5	24.2	ACB530-U1-024A-2	R2	16.9	4.9	8.7	19.8
10	30.8	ACB530-U1-031A-2	R2	16.9	4.9	8.7	19.8
15	46.2	ACB530-U1-046A-2	R3	19.3	8.0	9.1	35.0
20	59.4	ACB530-U1-059A-2	R3	19.3	8.0	9.1	35.0
25	74.8	ACB530-U1-075A-2	R4	23.5	8.0	10.3	53.0
30	88.0	ACB530-U1-088A-2	R4	23.5	8.0	10.3	53.0
40	114	ACB530-U1-114A-2	R4	23.5	8.0	10.3	53.0
50	143	ACB530-U1-143A-2	R6	27.6	11.9	15.8	152.0
60	178	ACB530-U1-178A-2	R6	27.6	11.9	15.8	152.0
75	221	ACB530-U1-221A-2	R6	27.6	11.9	15.8	152.0
100	248	ACB530-U1-248A-2	R6	27.6	11.9	15.8	152.0
3-phase supply voltage 380, 400, 415, 440, 460 or 480V.							
2	4.1	ACB530-U1-04A1-4	R1	13.0	4.9	8.3	14.3
3	6.9	ACB530-U1-06A9-4	R1	13.0	4.9	8.3	14.3
5	8.8	ACB530-U1-08A8-4	R1	13.0	4.9	8.3	14.3
7.5	11.9	ACB530-U1-012A-4	R1	13.0	4.9	8.3	14.3
10	15.4	ACB530-U1-015A-4	R2	16.9	4.9	8.7	19.8
15	23	ACB530-U1-023A-4	R2	16.9	4.9	8.7	19.8
20	31	ACB530-U1-031A-4	R3	19.3	8.0	9.1	35.0
25	38	ACB530-U1-038A-4	R3	19.3	8.0	9.1	35.0
30	44	ACB530-U1-044A-4	R3	19.3	8.0	9.1	35.0
40	59	ACB530-U1-059A-4	R4	23.5	8.0	10.3	53.0
50	72	ACB530-U1-072A-4	R4	23.5	8.0	10.3	53.0
60	77	ACB530-U1-078A-4	R4	23.5	8.0	10.3	53.0
75	97	ACB530-U1-097A-4	R4	23.5	8.0	10.3	53.0
100	125	ACB530-U1-125A-4	R5	23.7	10.4	11.3	75.0
125	157	ACB530-U1-157A-4	R6	27.6	11.9	15.8	152.0
150	180	ACB530-U1-180A-4	R6	27.6	11.9	15.8	152.0
200	246	ACB530-U1-246A-4	R6	27.6	11.9	15.8	152.0
250	316	ACB530-PC-316A-4	R8	83.7	31.7	25.9	794
300	368	ACB530-PC-368A-4	R8	83.7	31.7	25.9	794
350	414	ACB530-PC-414A-4	R8	83.7	31.7	25.9	794
400	486	ACB530-PC-486A-4	R8	83.7	31.7	25.9	794
3-phase supply voltage 500, 525, 550, 575, or 600V.							
1.5	2.7	ACB530-U1-02A7-6	R2	16.9	4.9	8.7	19.8
2	3.9	ACB530-U1-03A9-6	R2	16.9	4.9	8.7	19.8
3	6.1	ACB530-U1-06A1-6	R2	16.9	4.9	8.7	19.8
5	9	ACB530-U1-09A0-6	R2	16.9	4.9	8.7	19.8
7.5	11	ACB530-U1-011A-6	R2	16.9	4.9	8.7	19.8
10	17	ACB530-U1-017A-6	R2	16.9	4.9	8.7	19.8
15	22	ACB530-U1-022A-6	R3	19.3	8.0	9.1	35.0
20	27	ACB530-U1-027A-6	R3	19.3	8.0	9.1	35.0
25	32	ACB530-U1-032A-6	R4	23.5	8.0	10.3	53.0
30	41	ACB530-U1-041A-6	R4	23.5	8.0	10.3	53.0
40	52	ACB530-U1-052A-6	R4	23.5	8.0	10.3	53.0
50	62	ACB530-U1-062A-6	R4	23.5	8.0	10.3	53.0
60	77	ACB530-U1-077A-6	R6	27.6	11.9	15.8	152.0
75	99	ACB530-U1-099A-6	R6	27.6	11.9	15.8	152.0
100	125	ACB530-U1-125A-6	R6	27.6	11.9	15.8	152.0
125	144	ACB530-U1-144A-6	R6	27.6	11.9	15.8	152.0

BALDOR®
A MEMBER OF THE ABB GROUP
Baldor Electric Company
P.O. Box 2400 • Fort Smith, AR 72902-2400 U.S.A.
Phone (479) 646-4711 • Fax (479) 648-5792 • International Fax (479) 648-5895 • www.baldor.com

© Baldor Electric Company
FL796

Printed in U.S.A.
1/13 TCP 5000