# Conveyor Components

DODGE®

BALDOR®

# Your Complete Source for Pulleys and Pulley Assemblies

With a world wide reputation for reliability and quality, Baldor proudly offers a complete line of DODGE® pulleys and pulley assemblies, as well as complementary power transmission products –all from a single global source.

We offer a variety of pulley types, styles, and different options, plus complete pulley assembly packages, including the pulley, lagging, shafting, bearings, couplings and gearing.

Plus, we have the capabilities and the expertise to help you select the pulley and/or assembly that works best with your specific application. Only Baldor provides a computerized conveyor design program with detailed designs for conveyors up to 3500 feet long, with 800 feet of lift, and up to 3500 tons per hour.

# DODGE Pulleys and Pulley Assemblies for Al



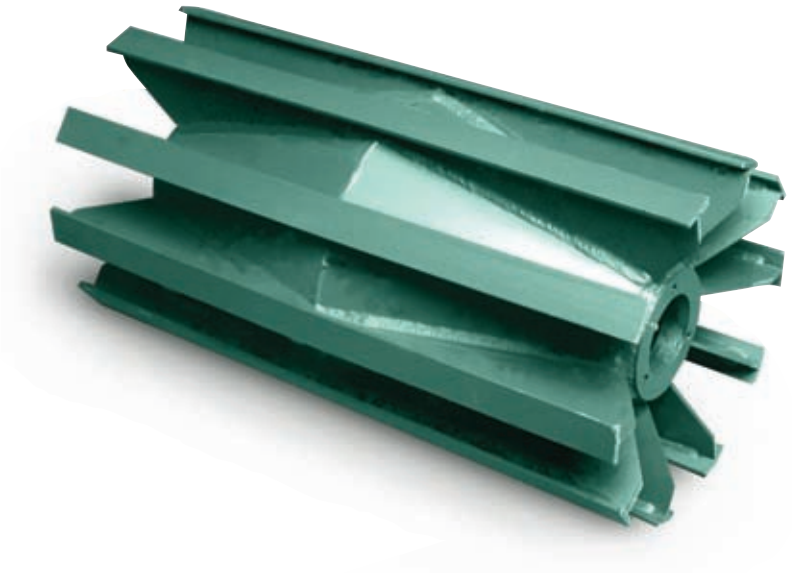

## Heavy Duty Wing Pulleys

Standard DODGE Heavy Duty Wing pulleys meet and/or exceed CEMA application standards for use with conveyor belts rated up to 350 pounds per inch of belt width.

## Heavy Duty Drum Pulleys

Standard DODGE Heavy Duty Drum pulleys meet and/or exceed CEMA application standards for use with conveyor belts rated up to 800 PIW.

## Additional Offerings

- 14° HE bushings and hubs assure lowest bellows installation stress for two-hub pulley applications.
- TAPER-LOCK® and QD* bushings are also available.
- Standard crown face or straight face construction is offered, as well as WING-LAG lagging.
- 6" - 60" diameter and face widths exceeding 78".

*QD is a trademark of Emerson Co.

# ll Your Industry Needs

Mine Duty Extra Drum & Quarry-Duty Extra Wing Pulleys

## Quarry Duty Extra Wing Pulley

Designed for harsh conveyor applications. Quarry Duty Extra Wing is built with 3/4" x 2" contact bars, 3/8" wings and spacers and machined integral hub end discs.

## Mine Duty Extra Drum Pulley

The standard DODGE Mine Duty Drum pulley fits CEMA dimensions.

## One-Piece Integral Hub

DODGE Mine Duty Extra Drum and Quarry Duty Extra pulleys use thick, integral one-piece end discs which are threaded to accept the bushing bolts, thus serving as the hub and end disc in one piece. This one-piece hub design eliminates the hub to end-disc weld, which is the most common failure point on a conveyor pulley.

## Exclusive HE (High Endurance) 14° Taper Bushing System

The HE taper bushing system offers the optimum taper for minimum installation stress.

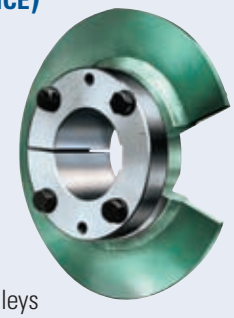

## Fillet Welding

The Mine Duty Extra Drum and Wing pulleys also provide a full fillet welding of the internal center discs to assure rugged reliability.

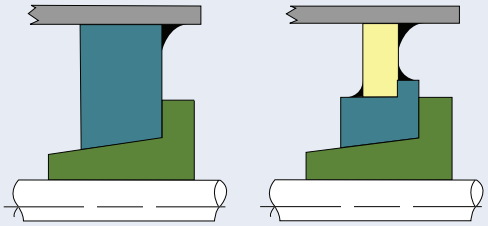

## High Strength With Low Installation Stress

The DODGE Mine Duty Extra design relies upon low installation stress and avoidance of hub welds to eliminate a possible failure point.

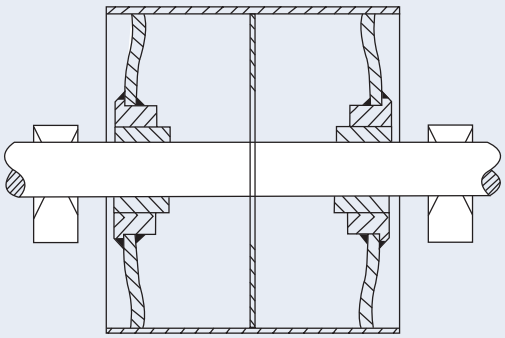

# DODGE Pulleys and Pulley Assemblies for Al

Engineered Class Pulleys

## Made-To-Order Based on Pulley Load

DODGE Engineered Class pulleys are custom-designed to the conveyor load, tensions, bearing centers, and wrap angles of your application. They are supplied for belt ranges up to and exceeding 8000 pounds per inch of belt width.

## Additional Features

- 14° HE bushings and hubs assure lowest bellows installation stress.
- Welded Integral hub and "T"-section Super pulleys minimize effects of welding in Heat Affected Zones (HAZ).
- B-LOC keyless locking devices are offered for shafts up to 30" in diameter.
- Full fillet welding of the internal center discs assure rugged reliability.

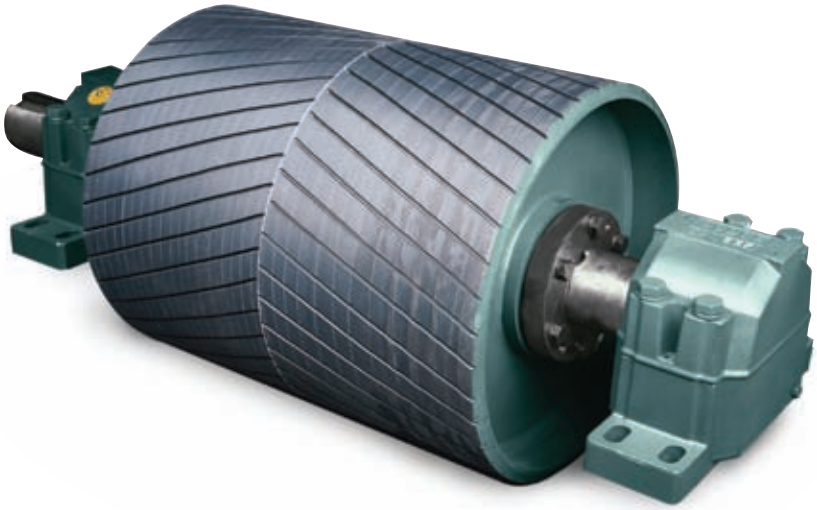

Special Application Pulleys

## Super Pulleys

### 400-Plus Successful Installations

A proven leader in its design and manufacturing, the DODGE Super Pulley is manufactured at the Clio Plant in Clio, SC—a dedicated manufacturing facility that offers complete in-house capabilities and a 60-step quality control process that includes complete weld inspection and testing.

Finite element design, material certification, certified welding, and technologically advanced lagging material assure you the exact pulley for your application.

NOTE: For Magnetic, Elevator or Dead Shaft Pulleys, please contact your Dodge Sales Engineer.

# ll of Your Industry Needs

## DODGE Pulley Bushings

Baldor offers a variety of DODGE bushing solutions—any of which can be fitted to any of our DODGE pulleys.

### HE Bushing/Hub

Not only is this the most dependable mounting system for conveyor pulleys, it is easy to install and remove. Specifically designed for drum and wing pulleys, the HE bushing has a taper angle of 14° that helps reduce axial movement along the shaft.

### TAPER-LOCK Bushing

An industry-standard for more than 40 years, the TAPER-LOCK bushing is available with a keyway. Its 8" taper grips tight to the shaft—allowing smooth operation with no wobble. Best of all, its flush mounting leaves no protruding parts and assures easy-on/easy-off installation and removal. It can accommodate shaft diameters up to 12".

### QD Bushing

The DODGE QD style bushing is stocked in popular finish bore sizes and minimum plain bore for custom reboring. Its flange design features a 4" taper and allows easy-on/easy-off installation and removal.

### Keyless Locking Device

Recommended for shafts over 12" in diameter, our keyless locking device requires no key and is available for up to 30" bores. It eliminates axial movement during assembly.

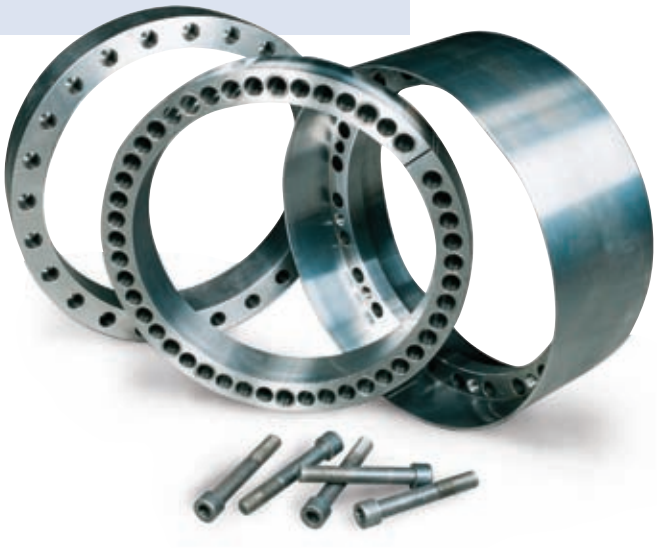

## Pulley Lagging

Pulley lagging surfaces increase belt traction and eliminate rim wear due to abrasive conditions. In addition, they reduce buildup on the belt to help extend service life. A variety of different lagging styles are offered.

- Plain
- Diamond Grooved
- Chevron
- Herringbone
- Holz with Replaceable Slide Lagging
- Ceramic Lagging
- WING-LAG – a Replaceable Urethane Slide-on Lagging for CEMA pulleys.

### Superior Lagging Materials

Standard material for DODGE lagging is Styrene-Butadiene Rubber (SBR). It provides excellent abrasion resistance, as well as resistance to heat, cutting, gouging, and tearing.

### D-Lag

For maximum abrasion resistance, DODGE also offers D-LAG – a premium rubber polymer with 73% greater life than standard SBR. It offers improved resistance to cuts and gouges, as well as an improved coefficient of friction and low-temperature flexibility.

DODGE also offers MSHA-approved Neoprene material, which is fire retardant and oil resistant.

DIAMOND

HERRINGBONE

CERAMIC

**World Headquarters**
P.O. Box 2400, Fort Smith, AR 72902-2400 U.S.A., Ph: (1) 479.646.4711, Fax (1) 479.648.5792, International Fax (1) 479.648.5895
**Baldor - Dodge**
6040 Ponders Court, Greenville, SC 29615-4617 U.S.A., Ph: (1) 864.297.4800, Fax: (1) 864.281.2433
**www.baldor.com**

© Baldor Electric Company
All Rights Reserved. Printed in USA.
BR4001
2/10 TCP 25,000