INSTRUCTION MANUAL FOR Dodge® TORQUE-ARM® II Speed Reducer Motor Mounts

TA0107MM TA6307MM TA1107MM
TA7315MM TA2115MM TA8407MM
TA3203MM TA9415MM TA4207MM
TA10507MM TA5215MM TA12608MM

These instructions must be read thoroughly before installing or operating this product.

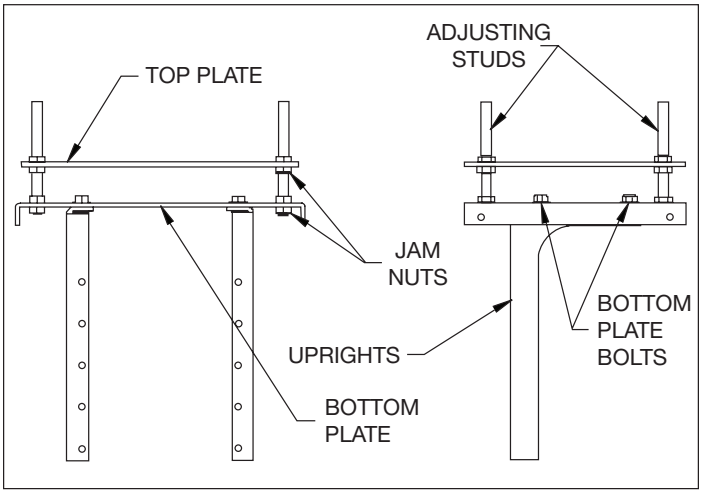

Figure 1 - Motor Mount Components

WARNING: Because of the possible danger to persons(s) or property from accidents which may result from the improper use of products, it is important that correct procedures be followed. Products must be used in accordance with the engineering information specified in the catalog. Proper installation, maintenance and operation procedures must be observed. The instructions in the instruction manuals must be followed. Inspections should be made as necessary to assure safe operation under prevailing conditions. Proper guards and other suitable safety devices or procedures as may be desirable or as may be specified in safety codes should be provided, and are neither provided by Baldor Electric Company nor are the responsibility of Baldor Electric Company. This unit and its associated equipment must be installed, adjusted and maintained by qualified personnel who are familiar with the construction and operation of all equipment in the system and the potential hazards involved. When risk to persons or property may be involved, a holding device must be an integral part of the driven equipment beyond the speed reducer output shaft.

ASSEMBLY

NOTE: Refer to Figure 1 for descriptions of component parts.

Using the hardware provided, assemble uprights (the angled parts to which the reducer is fastened) to the u-shaped, rectangular bottom plate. Notice that there are eight slots cut into the plate. If the reducer is to be mounted in Positions A or C, as illustrated in Figure 2, assemble the uprights in the outermost slots. If the reducer is to be mounted in Positions B or D, assemble the uprights in the inner most slots. The bottom plate may be mounted with the vertical flanges up or down (as shown in Figure 1). Snug bolts only, do not torque bolts at this time. Fasten long threaded studs to the four corners of bottom plate using jam nuts, one on each side of the plate. Securely tighten these nuts, as they will not require any further adjustment. Add one additional jam nut to each stud and thread approximately to the middle of the stud. Assemble top motor plate (the flat rectangular plate with many holes) on top of the jam nuts. Assemble the remaining jam nuts on studs to secure top motor plate. Do not fully tighten these nuts yet.

The motor mount may be installed in any of the four positions (A, B, C or D) and in any of the mounting levels (M1, M2, M3 or M4) shown in Figure 2. Note that the motor mount uprights attach to the input side of the reducer when mounted in either the “B” or “D” positions.

INSTALLATION

WARNING: To ensure that drive is not unexpectedly started, turn off and lock out or tag power source before proceeding. Remove all external loads from drive before removing or servicing drive or accessories. Failure to observe these precautions could result in bodily injury.

Remove four or six (as required) housing bolts from the reducer. Place the motor mount in position and reinstall the bolts through the motor mount uprights and reducer housing. Where reducer is shaft mounted in positions A or C, the torque-arm adapter plate must be mounted between the reducer housing and the motor mount upright. Tighten bolts to the torque specified in Table 1.

Mount the motor onto the top plate and bolt securely. Install the motor sheave and reducer sheave as close to the motor and reducer housings as practical. Loosen the bottom plate bolts and slide the motor and mounting plate to accurately align the motor and reducer sheave. Securely tighten the bottom plate bolts. Install the required number of V-belts and tension belts by alternately adjusting the jam nuts on the four adjusting studs provided on the motor mount. Check all bolts to see that they are securely tightened. Verify that the V-belt drive is properly aligned before operating the reducer.

BALDOR® • DODGE®

Table 1 - Recommended Bolt Torque Values		
Housing Bolt Recommended Torque Values		
Reducer Size	Fastener Size	Torque in Ft.-Lbs.
TA0107L	5/16-18	17 – 15
TA1107H	5/16-18	17 – 15
TA2115H	3/8-16	30 – 27
TA3203H	3/8-16	30 – 27
TA4207H	1/2-13	75 – 70
TA5215H	1/2-13	75 – 70
TA6307H	1/2-13	75 – 70
TA7315H	5/8-11	90 – 82
TA8407H	5/8-11	90 – 82
TA9415H	5/8-11	90 – 82
TA10507H	3/4-10	148 – 138
TA12608H	3/4-10	148 – 138

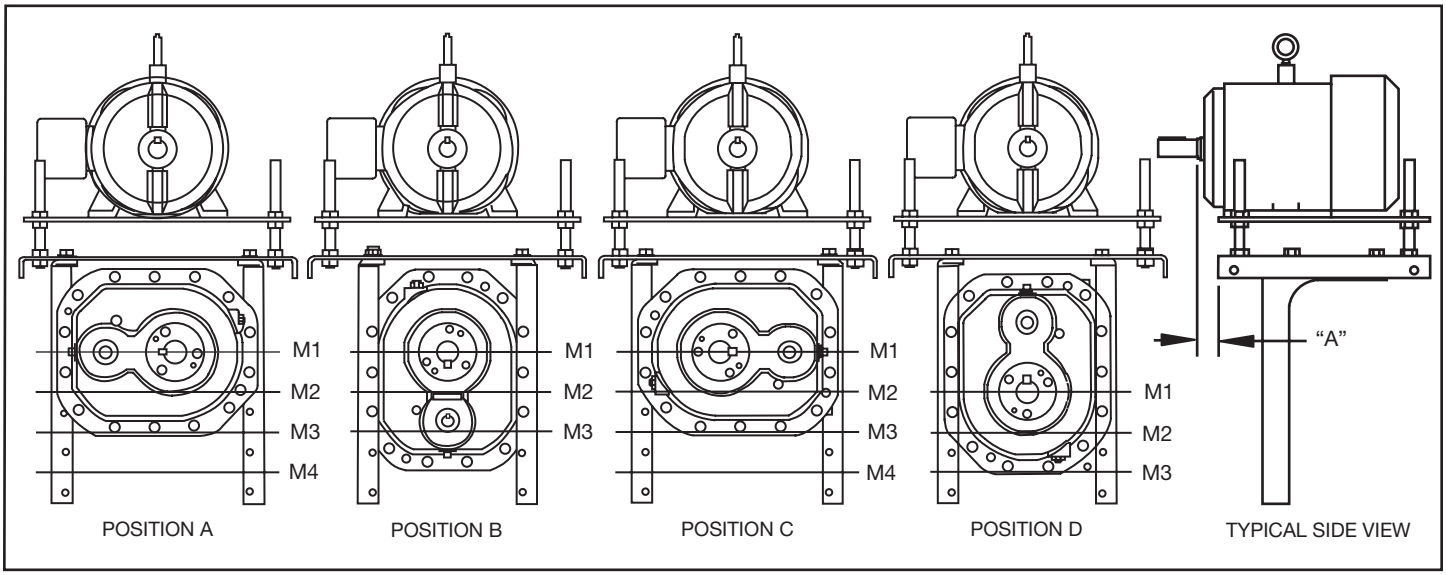

Figure 2 - Mounting Positions

Table 2 – V-Drive Center Distances

	Position	Mtg.	Motor Frame / Motor Shaft Offset Dimension "A"						
			56T / A=.78	140T / A=1.22	180T / A=1.37	210T / A=1.55	250T	280T	320T
TA0107L Reducer	A	M1	14.4 – 18.2	14.4 – 18.2	15.4 – 19.2	16.2 – 19.9	----	----	----
		M2	16.8 – 20.5	16.8 – 20.5	17.8 – 21.5	18.5 – 22.3	----	----	----
		M3	19.1 – 22.9	19.1 – 22.9	20.1 – 23.9	20.8 – 24.6	----	----	----
		M4	21.5 – 25.2	21.5 – 25.2	22.5 – 26.2	23.2 – 27.0	----	----	----
	B	M1	17.2 – 21.0	17.2 – 21.0	18.2 – 22.0	19.0 – 22.8	----	----	----
		M2	19.6 – 23.4	19.6 – 23.4	20.6 – 24.4	21.3 – 25.1	----	----	----
		M3	22.0 – 25.8	22.0 – 25.8	23.0 – 26.8	23.7 – 27.5	----	----	----
	C	M1	12.6 – 16.4	12.6 – 16.4	13.6 – 17.4	14.3 – 18.1	----	----	----
		M2	14.9 – 18.7	14.9 – 18.7	15.9 – 19.7	16.7 – 20.4	----	----	----
		M3	17.3 – 21.1	17.3 – 21.1	18.3 – 22.1	19.0 – 22.8	----	----	----
		M4	19.6 – 23.4	19.6 – 23.4	20.6 – 24.4	21.4 – 25.2	----	----	----
	D	M1	11.8 – 15.6	11.8 – 15.6	12.8 – 16.6	13.5 – 17.3	----	----	----
		M2	14.1 – 17.9	14.1 – 17.9	15.1 – 18.9	15.9 – 19.7	----	----	----
		M3	16.5 – 20.3	16.5 – 20.3	17.5 – 21.3	18.3 – 22.1	----	----	----

	Position	Mtg.	Motor Frame / Motor Shaft Offset Dimension "A"						
			56T / A=.78	140T / A=1.22	180T / A=1.37	210T / A=1.55	250T / A=1.56	280T	320T
TA1107H Reducer	A	M1	13.8 – 17.9	13.8 – 17.9	14.7 – 18.9	15.4 – 19.6	16.4 – 20.6	----	----
		M2	16.2 – 20.5	16.2 – 20.5	17.2 – 21.4	17.9 – 22.2	18.9 – 23.2	----	----
		M3	18.8 – 23.0	18.8 – 23.0	19.7 – 24.0	20.5 – 24.7	21.5 – 25.7	----	----
		M4	21.3 – 25.6	21.3 – 25.6	22.3 – 26.6	23.0 – 27.3	24.0 – 28.3	----	----
	B	M1	17.7 – 22.0	17.7 – 22.0	18.7 – 23.0	19.5 – 23.8	20.5 – 24.8	----	----
		M2	20.3 – 24.6	20.3 – 24.6	21.3 – 25.6	22.1 – 26.4	23.1 – 27.4	----	----
		M3	22. 9 – 27.2	22.9 – 27.2	23.9 – 28.2	24.6 – 29.0	25.6 – 30.0	----	----
	C	M1	13. 8 – 17.9	13.8 – 17.9	14.7 – 18.9	15.4 – 19.6	16.4 – 20.6	----	----
		M2	16.2 – 20.5	16.2 – 20.5	17.2 – 21.4	17.9 – 22.2	18.9 – 23.2	----	----
		M3	18.8 – 23.0	18.8 – 23.0	19.7 – 24.0	20.5 – 24.7	21.5 – 25.7	----	----
		M4	21.3 – 25.6	21.3 – 25.6	22.3 – 26.6	23.0 – 27.3	24.0 – 28.3	----	----
	D	M1	11.3 – 15.7	11.3 – 15.7	12.3 – 16.7	13.1 – 17.4	14.1 – 18.4	----	----
		M2	13.9 – 18.2	13.9 – 18.2	14.9 – 19.2	15.7 – 19.0	16.7 – 21.0	----	----
		M3	16.5 – 20.8	16.5 – 20.8	17.5 – 21.8	18.3 – 22.6	19.3 – 23.6	----	----

	Position	Mtg.	Motor Frame / Motor Shaft Offset Dimension "A"						
			56T / A=.78	140T / A=1.22	180T / A=1.37	210T / A=1.55	250T / A=1.56	280T	320T
TA2115H Reducer	A	M1	13.6 – 17.2	13.6 – 17.2	14.6 – 18.1	15.3 – 18.9	16.3 – 19.8	----	----
		M2	16.6 – 20.1	16.6 – 20.1	17.5 – 21.1	18.3 – 21.9	19.2 – 22.8	----	----
		M3	19.5 – 23.1	19.5 – 23.1	20.5 – 24.1	21.2 – 24.9	22.2 – 25.9	----	----
		M4	22.5 – 26.2	22.5 – 26.2	23.5 – 27.1	24.2 – 27.9	25.2 – 28.9	----	----
	B	M1	18.5 – 22.2	18.5 – 22.2	19.5 – 23.2	20.3 – 24.0	21.3 – 25.0	----	----
		M2	21.6 – 25.3	21.6 – 25.3	22.6 – 26.3	23.3 – 27.0	24.3 – 28.0	----	----
		M3	24.6 – 28.3	24.6 – 28.3	25.6 – 29.3	26.4 – 30.1	27.4 – 31.1	----	----
	C	M1	13.6 – 17.2	13.6 – 17.2	14.6 – 18.1	15.3 – 18.9	16.3 – 19.8	----	----
		M2	16.6 – 20.1	16.6 – 20.1	17.5 – 21.1	18.3 – 21.9	19.2 – 22.8	----	----
		M3	19.5 – 23.1	19.5 – 23.1	20.5 – 24.1	21.2 – 24.9	22.2 – 25.9	----	----
		M4	22.5 – 26.2	22.5 – 26.2	23.5 – 27.1	24.2 – 27.9	25.2 – 28.9	----	----
	D	M1	10.4 – 14.1	10.4 – 14.1	11.4 – 15.1	12.2 – 15.9	13.2 – 16.9	----	----
		M2	13.5 – 17.2	13.5 – 17.2	14.5 – 18.2	15.3 – 19.0	16.3 – 20.0	----	----
		M3	16.6 – 20.3	16.6 – 20.3	17.6 – 21.3	18.3 – 22.0	19.3 – 23.0	----	----

	Position	Mtg.	Motor Frame / Motor Shaft Offset Dimension "A"						
			56T / A=.78	140T / A=1.22	180T / A=1.37	210T / A=1.55	250T / A=1.56	280T / A=1.16	320T
TA3203H Reducer	A	M1	----	14.6 – 18.4	15.5 – 19.4	16.2 – 20.1	17.2 – 21.1	17.9 – 21.8	----
		M2	----	17.9 – 21.8	18.9 – 22.8	19.6 – 23.5	20.5 – 24.5	21.3 – 25.2	----
		M3	----	21.2 – 25.2	22.2 – 26.2	22.9 – 26.9	23.9 – 27.9	24.7 – 28.6	----
		M4	----	24.6 – 28.6	25.6 – 29.6	26.3 – 30.3	27.3 – 31.3	28.1 – 32.1	----
	B	M1	----	19.8 – 23.9	20.8 – 24.9	21.6 – 25.6	22.6 – 26.6	23.3 – 27.4	----
		M2	----	23.3 – 27.3	24.3 – 28.3	25.0 – 29.1	26.0 – 30.1	26.8 – 30.8	----
		M3	----	26.7 – 30.8	27.7 – 31.8	28.5 – 32.5	29.5 – 33.5	30.2 – 34.3	----
	C	M1	----	13.6 – 17.4	14.5 – 18.4	15.2 – 19.1	16.2 – 20.1	16.9 – 20.8	----
		M2	----	16.9 – 20.8	17.8 – 21.7	18.6 – 22.5	19.5 – 23.5	20.2 – 24.2	----
		M3	----	20.2 – 24.2	21.2 – 25.1	21.9 – 25.9	22.9 – 26.9	23.6 – 27.6	----
		M4	----	23.6 – 27.6	24.6 – 28.5	25.3 – 29.3	26.3 – 30.3	27.0 – 31.0	----
	D	M1	----	10.2 – 14.2	11.2 – 15.2	11.9 – 16.0	12.9 – 17.0	13.7 – 17.7	----
		M2	----	13.6 – 17.7	14.6 – 18.7	15.4 – 19.4	16.4 – 20.4	17.1 – 21.2	----
		M3	----	17.1 – 21.1	18.1 – 22.1	18.8 – 22.9	19.8 – 23.9	20.6 – 24.6	

	Position	Mtg.	Motor Frame / Motor Shaft Offset Dimension "A"						
			140T / A=1.22	180T / A=1.37	210T / A=1.55	250T / A=1.56	280T / A=1.16	320T / A=.38	360T
TA4207H Reducer	A	M1	17.3 – 21.1	18.3 – 22.1	19.0 – 22.8	19.9 – 23.8	20.6 – 24.5	21.6 – 25.5	----
		M2	21.2 – 25.1	22.2 – 26.1	22.9 – 26.8	23.9 – 27.8	24.6 – 28.6	25.6 – 29.5	----
		M3	25.2 – 29.2	26.2 – 30.2	26.9 – 30.9	27.9 – 31.9	28.7 – 32.6	29.6 – 33.6	----
		M4	29.3 – 33.2	30.2 – 34.2	31.0 – 34.9	32.0 – 35.9	32.7 – 36.7	33.7 – 37.7	----
	B	M1	22.6 – 26.7	23.6 – 27.7	24.4 – 28.4	25.4 – 29.4	26.1 – 30.2	27.1 – 31.2	----
		M2	26.8 – 30.8	27.8 – 31.8	28.5 – 32.5	29.5 – 33.5	30.3 – 34.3	31.3 – 35.3	----
		M3	30.9 – 34.9	31.9 – 35.9	32.6 – 36.7	33.6 – 37.7	34.4 – 38.4	35.4 – 39.4	----
	C	M1	5.4 – 19.2	16.3 – 20.1	17.0 – 20.8	18.0 – 21.8	18.7 – 22.5	19.6 – 23.5	----
		M2	19.3 – 23.1	20.2 – 24.1	20.9 – 24.8	21.9 – 25.8	22.6 – 26.5	23.6 – 27.5	----
		M3	23.2 – 27.2	24.2 – 28.1	24.9 – 28.9	25.9 – 29.9	26.6 – 30.6	27.6 – 31.6	----
		M4	27.3 – 31.2	28.2 – 32.2	29.0 – 32.9	29.9 – 33.9	30.7 – 34.6	31.7 – 35.6	----
	D	M1	12.2 – 16.2	13.2 – 17.2	14.0 – 18.0	15.0 – 19.0	15.7 – 19.7	16.7 – 20.7	----
		M2	16.3 – 20.4	17.3 – 21.4	18.1 – 22.1	19.1 – 23.1	19.8 – 23.9	20.8 – 24.9	----
		M3	20.4 – 24.5	21.4 – 25.5	22.2 – 26.2	23.2 – 27.2	23.9 – 28.0	24.9 – 29.0	----

	Position	Mtg.	Motor Frame / Motor Shaft Offset Dimension "A"						
			180T / A=1.37	210T / A=1.55	250T / A=1.56	280T / A=1.16	320T / A=.38	360T / A=1.01	400T
TA5215H Reducer	A	M1	19.5 – 23.4	20.2 – 24.1	21.1 – 25.1	21.8 – 25.8	22.8 – 26.8	23.8 – 27.8	----
		M2	24.2 – 28.3	25.0 – 29.0	25.9 – 30.0	26.7 – 30.7	27.6 – 31.7	28.6 – 32.7	----
		M3	29.1 – 33.2	29.8 – 33.9	30.8 – 34.9	31.5 – 35.6	32.5 – 36.6	33.5 – 37.6	----
		M4	34.0 – 38.1	34.7 – 38.8	35.7 – 39.8	36.5 – 40.6	37.4 – 41.5	38.4 – 42.5	----
	B	M1	26.2 – 30.3	26.9 – 31.1	27.9 – 32.1	28.7 – 32.8	29.7 – 33.8	30.7 – 34.8	----
		M2	31.2 – 35.3	31.9 – 36.1	32.9 – 37.1	33.7 – 37.8	34.7 – 38.8	35.7 – 39.8	----
		M3	36.2 – 40.3	36.9 – 41.1	37.9 – 42.1	38.7 – 42.8	39.7 – 43.8	40.7 – 44.8	----
	C	M1	16.4 – 20.3	17.1 – 21.0	18.0 – 21.9	18.7 – 22.6	19.7 – 23.6	20.6 – 24.6	----
		M2	21.1 – 25.1	21.8 – 25.8	22.8 – 26.8	23.5 – 27.5	24.4 – 28.5	25.4 – 29.4	----
		M3	25.9 – 29.9	26.6 – 30.7	27.6 – 31.6	28.3 – 32.4	29.3 – 33.4	30.3 – 34.3	----
		M4	30.8 – 34.8	31.5 – 35.6	32.5 – 36.6	32.2 – 37.3	34.2 – 38.3	35.2 – 39.3	----
	D	M1	17.7 – 21.8	18.4 – 22.6	19.4 – 23.6	20.2 – 24.3	21.2 – 25.3	22.2 – 26.3	----
		M2	22.7 – 26.8	23.4 – 27.6	24.4 – 28.6	25.2 – 29.3	26.2 – 30.3	27.2 – 31.3	----
		M3	N/A	N/A	N/A	N/A	N/A	N/A	----

	Position	Mtg.	Motor Frame / Motor Shaft Offset Dimension "A"						
			180T / A=1.37	210T / A=1.55	250T / A=1.56	280T / A=1.16	320T / A=.38	360T / A=1.01	400T / A=.75
TA6307H Reducer	A	M1	21.2 – 25.0	21.9 – 25.8	22.9 – 26.7	23.6 – 27.4	24.5 – 28.4	25.5 – 29.4	26.5 – 30.4
		M2	26.2 – 30.1	26.9 – 30.8	27.9 – 31.8	28.6 – 32.5	29.6 – 33.5	30.5 – 34.5	31.5 – 35.4
		M3	31.2 – 35.1	32.0 – 35.9	32.9 – 36.9	33.7 – 37.6	34.6 – 38.6	35.6 – 39.6	36.6 – 40.6
		M4	36.3 – 40.3	37.0 – 41.0	38.0 – 42.0	38.8 – 42.7	39.7 – 43.7	40.7 – 44.7	41.7 – 45.7
	B	M1	27.5 – 31.5	28.2 – 32.3	29.2 – 33.3	30.0 – 34.0	31.0 – 35.0	32.0 – 36.0	33.0 – 37.0
		M2	32.7 – 36.7	33.4 – 37.5	34.4 – 38.5	35.2 – 39.2	36.2 – 40.2	37.2 – 41.2	38.2 – 42.2
		M3	37.9 – 41.9	38.6 – 42.7	39.6 – 43.7	40.4 – 44.4	41.4 – 45.4	42.4 – 46.4	43.4 – 47.4
	C	M1	17.9 – 21.6	18.6 – 22.3	19.5 – 23.3	20.2 – 24.0	21.1 – 25.0	22.1 – 25.9	23.0 – 26.9
		M2	22.8 – 26.6	23.5 – 27.3	24.4 – 28.3	25.2 – 29.0	26.1 – 30.0	27.1 – 31.0	28.0 – 32.0
		M3	27.8 – 31.7	28.5 – 32.4	29.5 – 33.4	30.2 – 34.1	31.2 – 35.1	32.1 – 36.1	33.1 – 37.1
		M4	32.8 – 36.8	33.5 – 37.5	34.5 – 38.5	35.3 – 39.2	36.2 – 40.2	37.2 – 41.2	38.2 – 42.2
	D	M1	14.4 – 18.4	15.2 – 19.2	16.1 – 20.2	16.9 – 20.9	17.9 – 21.9	18.9 – 22.9	19.9 – 23.9
		M2	19.6 – 23.6	20.3 – 24.3	21.3 – 25.3	22.1 – 26.1	23.1 – 27.1	24.1 – 28.1	25.1 – 29.1
		M3	24.8 - 28.8	25.5 - 29.5	26.5 - 30.5	27.3 - 31.3	28.3 - 32.3	29.3 - 33.3	30.2 - 34.3

	Position	Mtg.	Motor Frame / Motor Shaft Offset Dimension "A"						
			210T / A=1.55	250T / A=1.56	280T / A=1.16	320T / A=.38	360T / A=1.01	400T / A=.75	440T
TA7315H Reducer	A	M1	27.4 – 31.4	28.4 – 32.4	29.1 – 33.1	30.1 – 34.1	31.1 – 35.1	32.1 – 36.1	----
		M2	33.3 – 37.3	34.3 – 38.3	35.0 – 39.0	36.0 – 40.0	37.0 – 41.0	38.0 – 42.0	----
		M3	39.2 – 43.2	40.2 – 44.2	41.0 – 45.0	42.0 – 46.0	43.0 – 47.0	44.0 – 48.0	----
		M4	45.2 – 49.2	46.2 – 50.2	46.9 – 50.9	47.9 – 51.9	48.9 – 52.9	49.9 – 53.9	----
	B	M1	30.0 – 34.0	31.0 – 35.0	31.8 – 35.7	32.8 – 36.7	33.7 – 37.7	34.7 – 38.7	----
		M2	36.0 – 40.0	37.0 – 40.9	37.7 – 41.7	38.7 - 42.7	39.7 - 43.7	40.7 – 44.7	----
		M3	41.9 – 45.9	42.9 – 46.9	43.6 – 47.6	44.6 – 48.6	45.6 – 49.6	46.6 – 50.6	----
	C	M1	17.4 – 21.3	18.4 – 22.4	19.1 – 23.0	20.0 – 23.9	21.0 – 24.9	22.0 – 25.9	----
		M2	23.2 – 27.1	24.2 – 28.1	24.9 – 28.8	25.9 – 29.8	26.9 – 30.8	27.8 – 31.8	----
		M3	29.1 – 33.0	30.0 – 34.0	30.8 – 34.7	31.8 – 35.7	32.8 – 36.7	33.7 – 37.7	----
		M4	35.0 – 39.0	36.0 – 39.9	36.7 – 40.7	37.7 – 41.7	38.7 – 42.7	39.7 – 43.7	----
	D	M1	20.5 – 24.4	21.5 – 25.4	22.2 – 26.1	23.2 – 27.1	24.2 – 28.1	25.1 – 29.1	----
		M2	26.4 – 30.3	27.4 – 31.3	28.1 – 32.0	29.1 – 33.0	30.1 – 34.0	31.0 – 35.0	----
		M3	32.3 – 36.3	33.3 – 37.2	34.0 – 38.0	35.0 – 39.0	36.0 – 40.0	37.0 – 41.0	----

	Position	Mtg.	Motor Frame / Motor Shaft Offset Dimension "A"						
			210T / A=1.55	250T / A=1.56	280T / A=1.16	320T / A=.38	360T / A=1.01	400T / A=.75	440T
TA8407H Reducer	A	M1	27.4 – 31.3	28.3 – 32.3	29.1 – 33.0	30.1 – 34.0	31.0 – 35.0	32.0 – 36.0	----
		M2	33.2 – 37.2	34.2 – 38.2	35.0 – 39.0	36.0 – 39.9	37.0 – 40.9	37.9 – 41.9	----
		M3	39.2 – 43.2	40.2 – 44.2	40.9 – 44.9	41.9 – 45.9	42.9 – 46.9	43.9 – 47.9	----
		M4	45.1 – 49.1	46.1 – 50.1	46.9 – 50.9	47.9 – 51.9	48.8 – 52.8	49.8 – 53.8	----
	B	M1	30.2 – 34.2	31.2 – 35.2	32.0 – 35.9	32.9 – 36.9	33.9 – 37.9	34.9 – 38.9	----
		M2	36.2 – 40.1	37.1 – 41.1	37.9 – 41.9	38.9 – 42.9	39.9 – 43.9	40.9 – 44.9	----
		M3	42.1 – 46.1	43.1 – 47.1	43.8 – 47.8	44.8 – 48.8	45.8 – 49.8	46.8 – 50.8	----
	C	M1	17.6 – 21.4	18.5 – 22.4	19.2 – 23.1	20.2 – 24.1	21.2 – 25.1	22.1 – 26.0	----
		M2	23.3 – 27.3	24.3 – 28.2	25.0 – 29.0	26.0 – 30.0	27.0 – 30.9	28.0 – 31.9	----
		M3	29.2 – 33.2	30.2 – 34.1	30.9 – 34.9	31.9 – 35.9	32.9 – 36.9	33.9 – 37.8	----
		M4	35.1 – 39.1	36.1 – 40.1	36.8 – 40.8	37.8 – 41.8	38.8 - 42.8	39.8 – 43.8	----
	D	M1	20.3 – 24.2	21.3 – 25.2	22.0 – 25.9	23.0 – 26.9	23.9 – 27.9	24.9 – 28.9	----
		M2	26.1 – 30.1	27.1 – 31.1	27.9 – 31.8	28.8 – 32.8	29.8 – 33.8	30.8 – 34.8	----
		M3	32.1 – 36.0	33.0 – 37.0	33.8 – 37.8	34.8 – 38.8	35.8 – 39.7	36.7 – 40.7	----

	Position	Mtg.	Position Mtg. Motor Frame / Motor Shaft Offset Dimension "A"						
			250T / A=1.56	280T / A=1.16	320T / A=.38	360T / A=1.01	400T / A=.75	440T / A=1.62	----
TA9415H Reducer	A	M1	N/A	N/A	N/A	N/A	N/A	N/A	----
		M2	N/A	N/A	N/A	N/A	N/A	N/A	----
		M3	N/A	N/A	N/A	N/A	N/A	N/A	----
		M4	N/A	N/A	N/A	N/A	N/A	N/A	----
	B	M1	35.5 – 39.2	36.2 – 40.0	37.2 – 41.0	38.2 – 42.0	39.2 – 43.0	40.2 – 44.0	----
		M2	40.5 – 44.2	41.2 – 45.0	42.2 – 46.0	43.2 – 47.0	44.2 – 47.9	45.2 – 48.9	----
		M3	N/A	N/A	N/A	N/A	N/A	N/A	----
	C	M1	N/A	N/A	N/A	N/A	N/A	N/A	----
		M2	N/A	N/A	N/A	N/A	N/A	N/A	----
		M3	N/A	N/A	N/A	N/A	N/A	N/A	----
		M4	N/A	N/A	N/A	N/A	N/A	N/A	----
	D	M1	21.3 – 25.0	22.0 – 25.7	23.0 – 26.7	24.0 – 27.7	25.0 – 28.7	25.9 – 29.7	----
		M2	26.2 – 29.9	26.9 – 30.6	27.9 – 31.6	28.9 – 32.6	29.9 – 33.6	30.9 – 34.6	----
		M3	N/A	N/A	N/A	N/A	N/A	N/A	----

	Position	Mtg.	Position Mtg. Motor Frame / Motor Shaft Offset Dimension "A"						
			250T / A=1.56	280T / A=1.16	320T / A=.38	360T / A=1.01	400T / A=.75	440T / A=1.62	----
TA10507H Reducer	A	M1	N/A	N/A	N/A	N/A	N/A	N/A	----
		M2	N/A	N/A	N/A	N/A	N/A	N/A	----
		M3	N/A	N/A	N/A	N/A	N/A	N/A	----
		M4	N/A	N/A	N/A	N/A	N/A	N/A	----
	B	M1	46.7 – 50.5	47.5 – 51.2	48.5 – 52.2	49.5 – 53.2	50.5 – 54.2	51.5 – 55.2	----
		M2	52.1 – 55.9	52.8 – 56.6	53.8 – 57.6	54.8 – 58.6	55.8 – 59.6	56.8 – 60.6	
		M3	N/A	N/A	N/A	N/A	N/A	N/A	----
	C	M1	N/A	N/A	N/A	N/A	N/A	N/A	----
		M2	N/A	N/A	N/A	N/A	N/A	N/A	----
		M3	N/A	N/A	N/A	N/A	N/A	N/A	----
		M4	N/A	N/A	N/A	N/A	N/A	N/A	----
	D	M1	17.7 – 21.4	18.4 – 22.2	19.4 – 23.2	20.4 – 24.2	21.4 – 25.2	22.4 – 26.2	
		M2	23.0 – 26.8	23.8 – 27.5	24.8 – 28.5	25.8 –29.5	26.8 – 30.5	27.8 – 31.5	
		M3	N/A	N/A	N/A	N/A	N/A	N/A	----

	Position	Mtg.	Position Mtg. Motor Frame / Motor Shaft Offset Dimension "A"						
			250T / A=1.56	280T / A=1.16	320T / A=.38	360T / A=1.01	400T / A=.75	440T / A=1.62	----
TA12608H Reducer	A	M1	N/A	N/A	N/A	N/A	N/A	N/A	----
		M2	N/A	N/A	N/A	N/A	N/A	N/A	----
		M3	N/A	N/A	N/A	N/A	N/A	N/A	----
		M4	N/A	N/A	N/A	N/A	N/A	N/A	----
	B	M1	48.9 – 52.7	49.7 – 53.5	50.7 – 54.5	51.7 – 55.5	52.7 – 56.5	53.7 – 57.5	
		M2	54.5 – 58.3	55.3 – 59.1	56.3 – 60.1	57.3 – 61.1	58.3 – 62.1	59.3 – 63.1	
		M3	N/A	N/A	N/A	N/A	N/A	N/A	----
	C	M1	N/A	N/A	N/A	N/A	N/A	N/A	----
		M2	N/A	N/A	N/A	N/A	N/A	N/A	----
		M3	N/A	N/A	N/A	N/A	N/A	N/A	----
		M4	N/A	N/A	N/A	N/A	N/A	N/A	----
	D	M1	22.0 – 25.8	22.8 – 26.6	23.8 – 27.6	24.8 – 28.6	25.8 – 29.6	26.8 – 30.6	----
		M2	N/A	N/A	N/A	N/A	N/A	N/A	----
		M3	N/A	N/A	N/A	N/A	N/A	N/A	----

BALDOR®

A MEMBER OF THE ABB GROUP

P.O. Box 2400, Fort Smith, AR 72902-2400 U.S.A., Ph: (1) 479.646.4711, Fax (1) 479.648.5792, International Fax (1) 479.648.5895

Dodge Product Support

6040 Ponders Court, Greenville, SC 29615-4617 U.S.A., Ph: (1) 864.297.4800, Fax: (1) 864.281.2433

www.baldor.com

© Baldor Electric Company
MN1639 (Replaces 499376)

All Rights Reserved. Printed in USA.
10/13 Printshop 500